FOS Hardware Design

Jeff Glenn

13 December 1994

FOS Hardware Overview

- Real-Time Server
- Data Server
- Data Storage Unit
- User Stations
- Time Server
- Peripherals

EOC LAN Design: Logical Connectivity

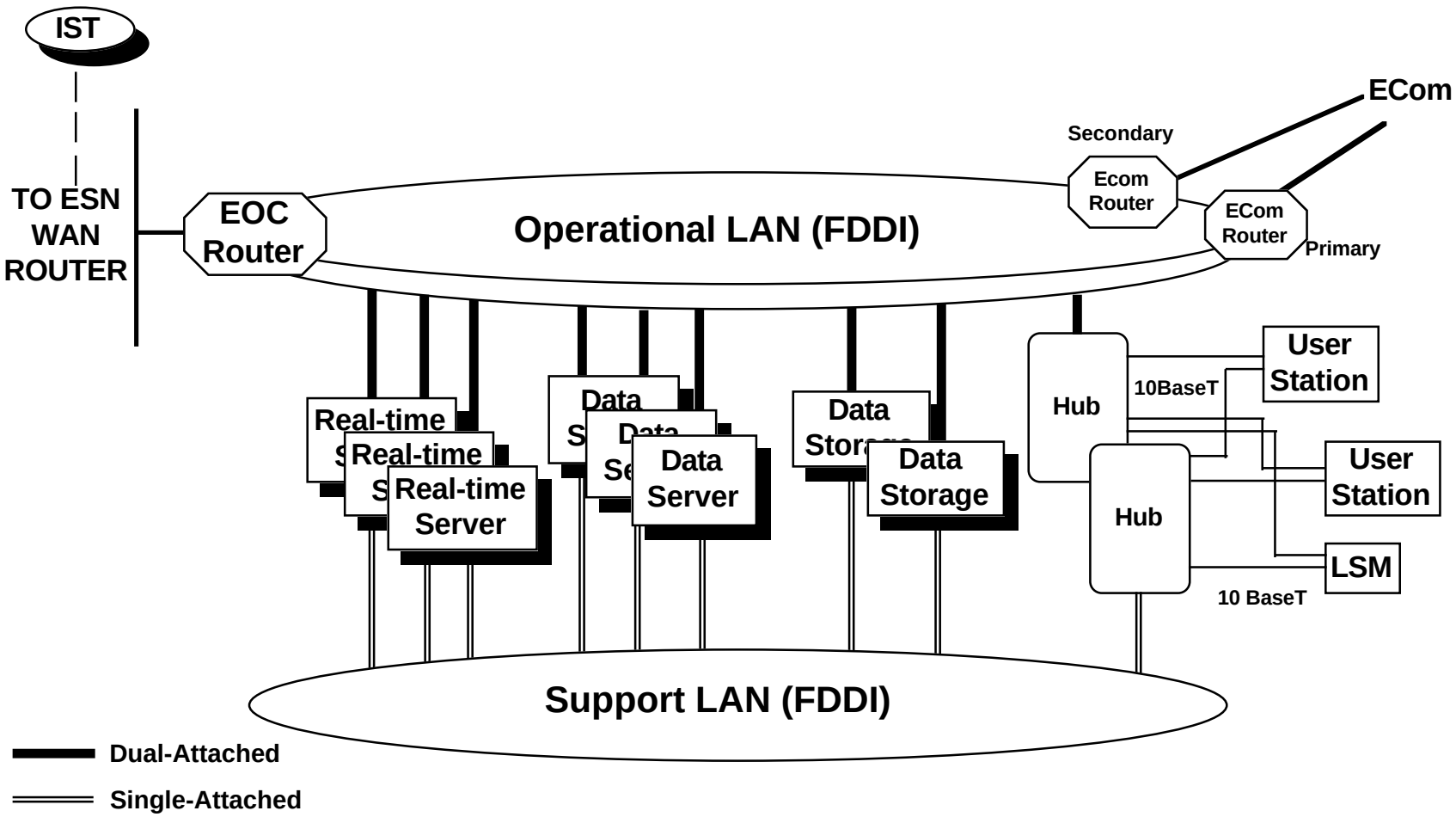

EOC Hardware Design (Partial)

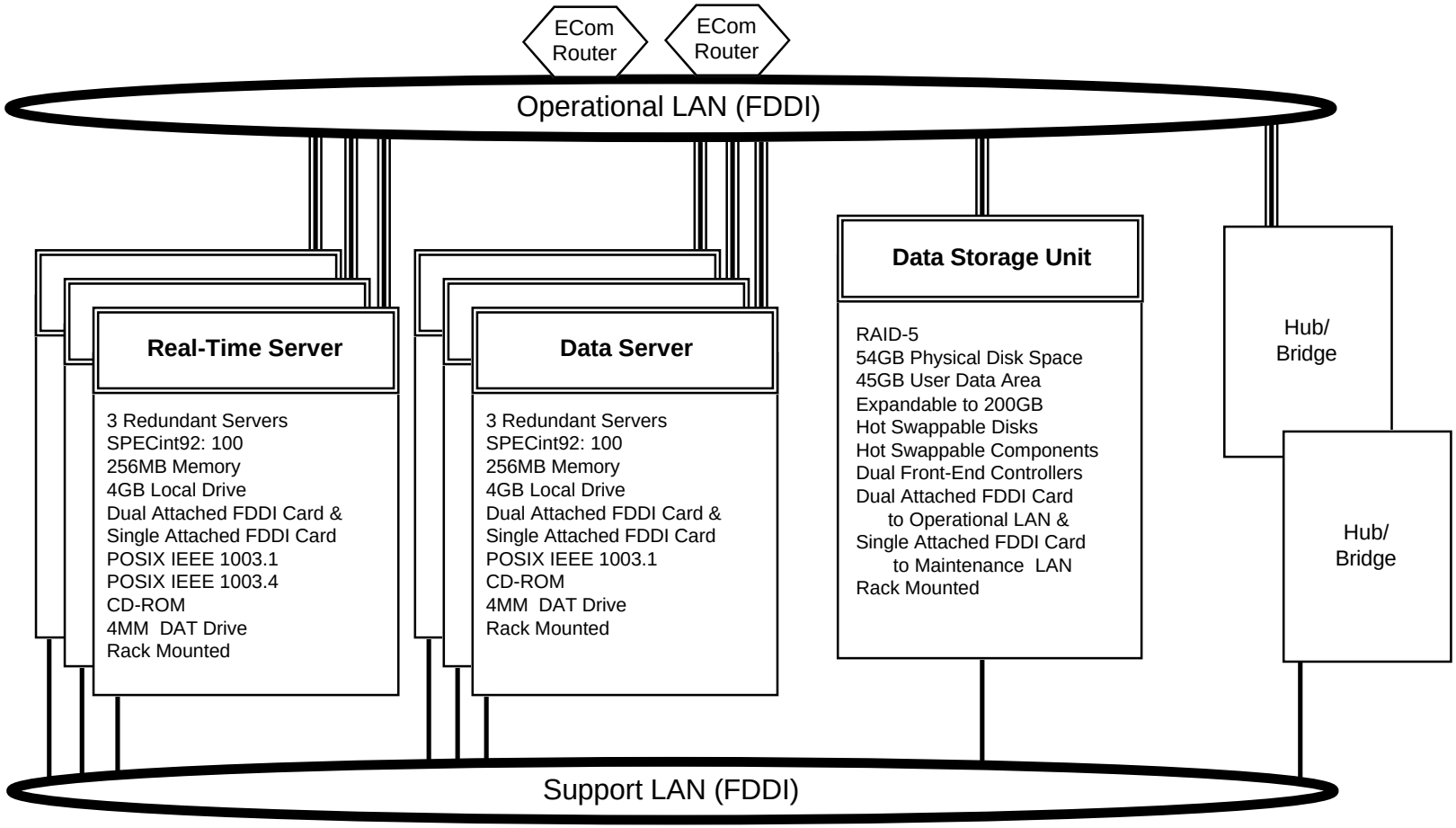

EOC Computer Requirements

	Data Server	Real Time Server	User Station
Memory	256MB	256MB	64MB
SPECint92	100	100	80
Disk Space	4GB	4GB	2GB
Monitor	12" Mono	12" Mono	19" Color
Desktop/Rack	Rack	Rack	Desktop
Peripherals	CD-ROM Tape Drive	CD-ROM Tape Drive	CD-ROM
LAN Connection	Dual FDDI Connection (2)	Dual FDDI Connection (2)	Ethernet (2)

Candidate Configurations

Data Server	Real Time Server	User Station
DEC 1000 4/200	DEC 1000 4/200	DEC 3000/600
DEC 2100 4/275	DEC 2100 4/275	HP 715/80
HP9000/800-H53	HP9000/751	IBM RS6000/41T
SGI Challenge S	SGI Challenge S	SGI 4600SC
		SUN SPARC 20 /61

SAMPLE CONFIGURATIONS ONLY

Processing Features

- Distributed Processing
- Multiple Failover
- Scalable
- Mission Drives Growth
- Modular Growth
- Plug and Play
- Vendor Independent
- Evolvable
- Low Risk

Data Storage Unit

- Network Attached
- RAID Level 5
- 54GB Raw Disk
- 45GB Usable Disk Area
- Redundant Front-end Controllers
- 2 - Dual Attached FDDI Cards Per Controller
- Hot Swappable Disks
- Hot Swappable Power Supply

RAID Storage

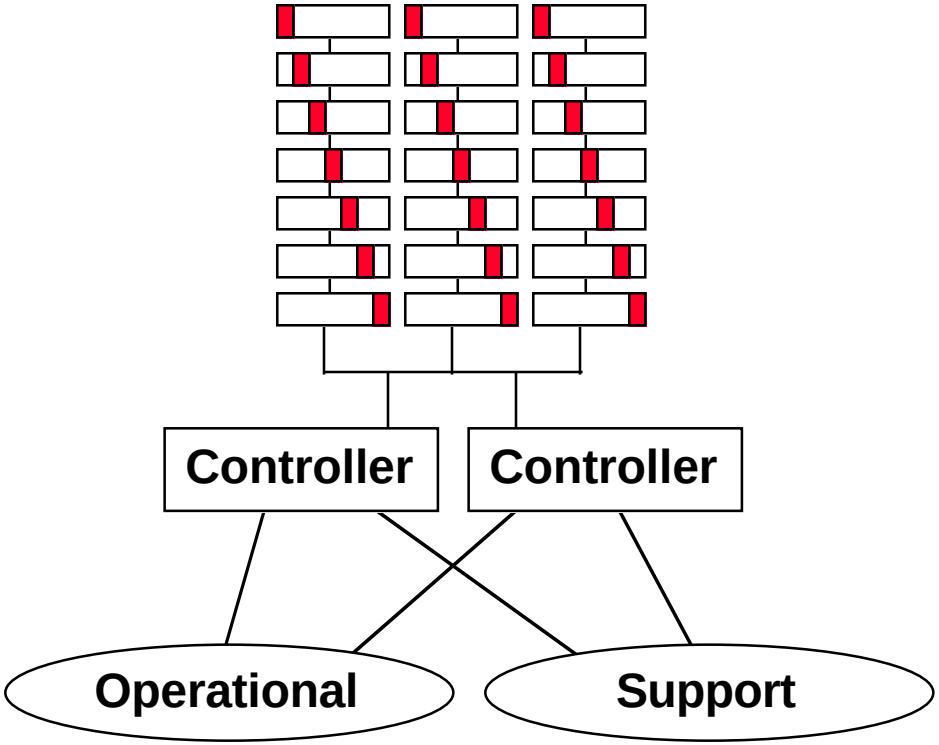

Data Storage Features

- No Single Point of Failure
- Removes I/O Overhead From Servers
- Control Data Access to User Stations
- Physical Location of Disk/Data Transparent to Users
- Low RAID overhead
- Multiple Reads & Writes Concurrently
- Larger Chunks of Data
- Efficient Telemetry Data Access
- > 50% Disk Available
- Modular Growth
- Vendor Independent

RAID Disk Usage (Gigabytes)

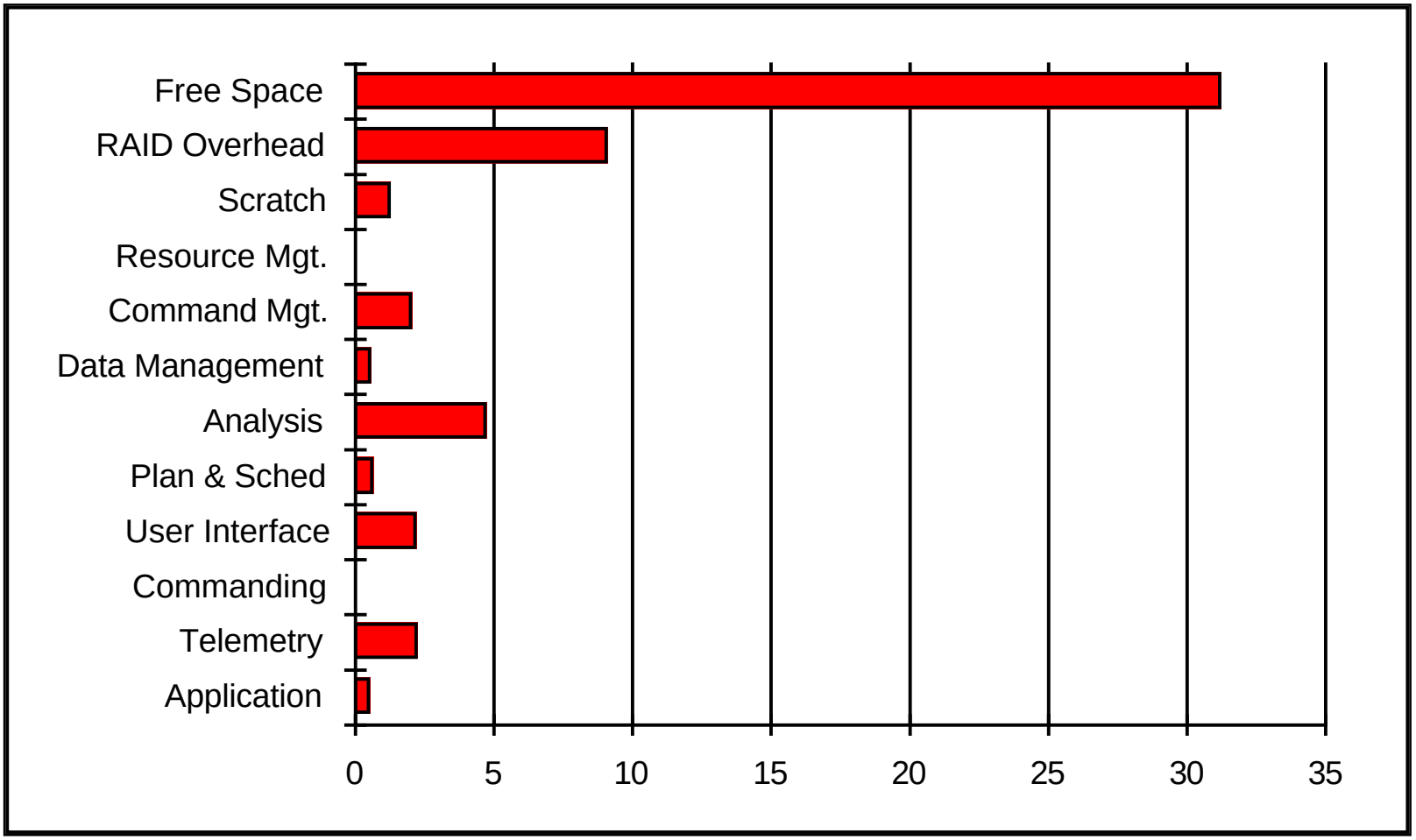

EOC Hardware Design (Partial)

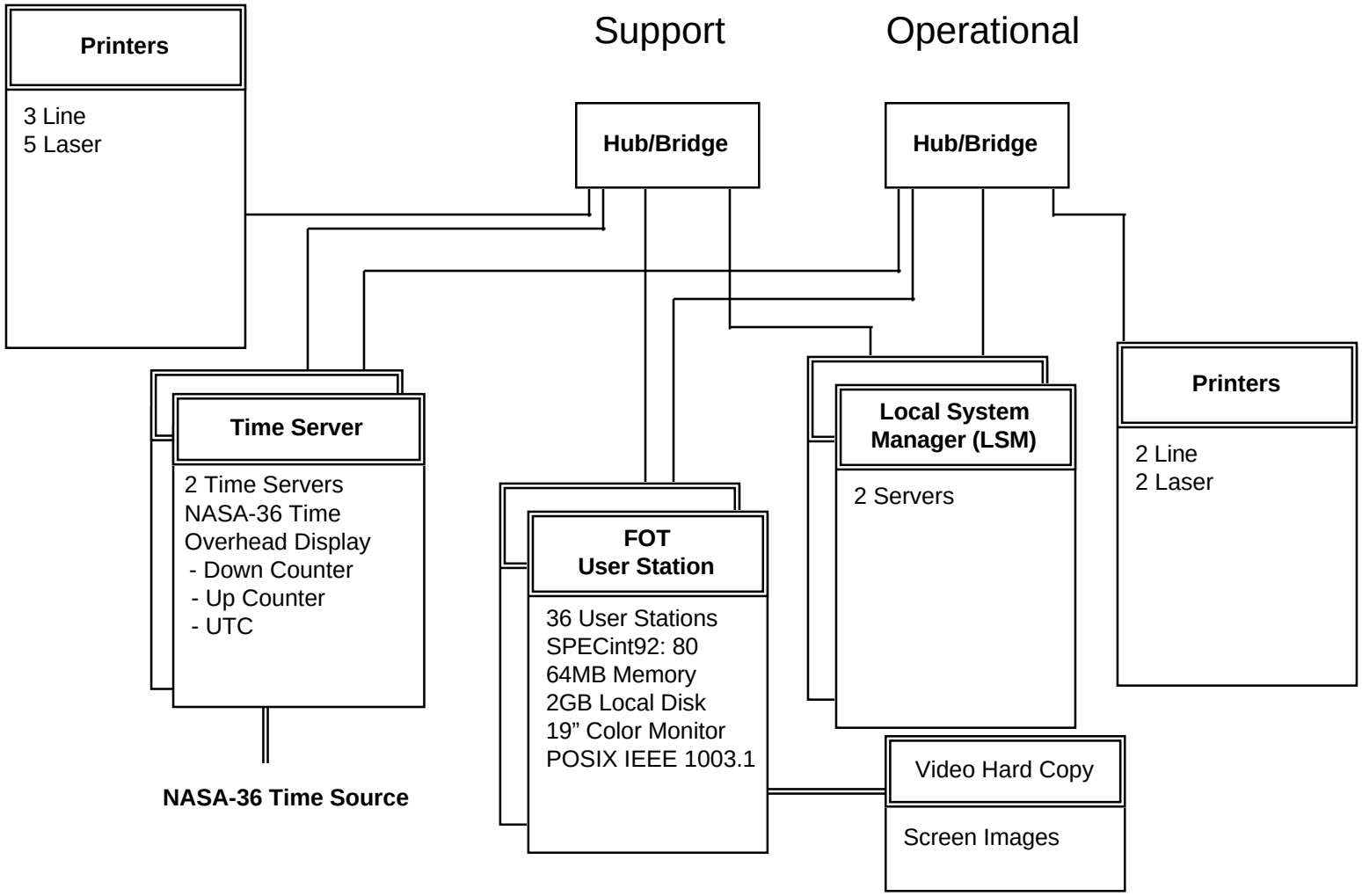

Future Analysis

- Future Prototyping -> Refine H/W Requirements
- Analyze/Identify Potential Bottlenecks
  - Disk
  - CPU
  - Bandwidth
- New Products
- Risk