EOSDIS

ECS Preliminary Design Review (PDR) Process

Segment PDRs:

- FOS 12/12/94 - 12/16/94
- CSMS 1/17/95 - 1/20/95
- SDPS 2/13/95 - 2/17/95

PDR Wrapup 2/28/95

Workshops and in-progress reviews

Focus throughout on ECS Release A

- TRMM operational system
- Release B aspects which impact Release A design

EOSDIS

Purpose of PDR Wrap-Up

EOS

Review general results of segment PDRs

Review key design issues identified at segment PDRs

Review changes to system-level baseline since SDR

Review overall feasibility of ECS design

Review overall feasibility of ECS development approach

Confirm the completion of the Preliminary Design phase

Identify actions required to proceed with Critical Design

EOSDIS

EOSDIS Context

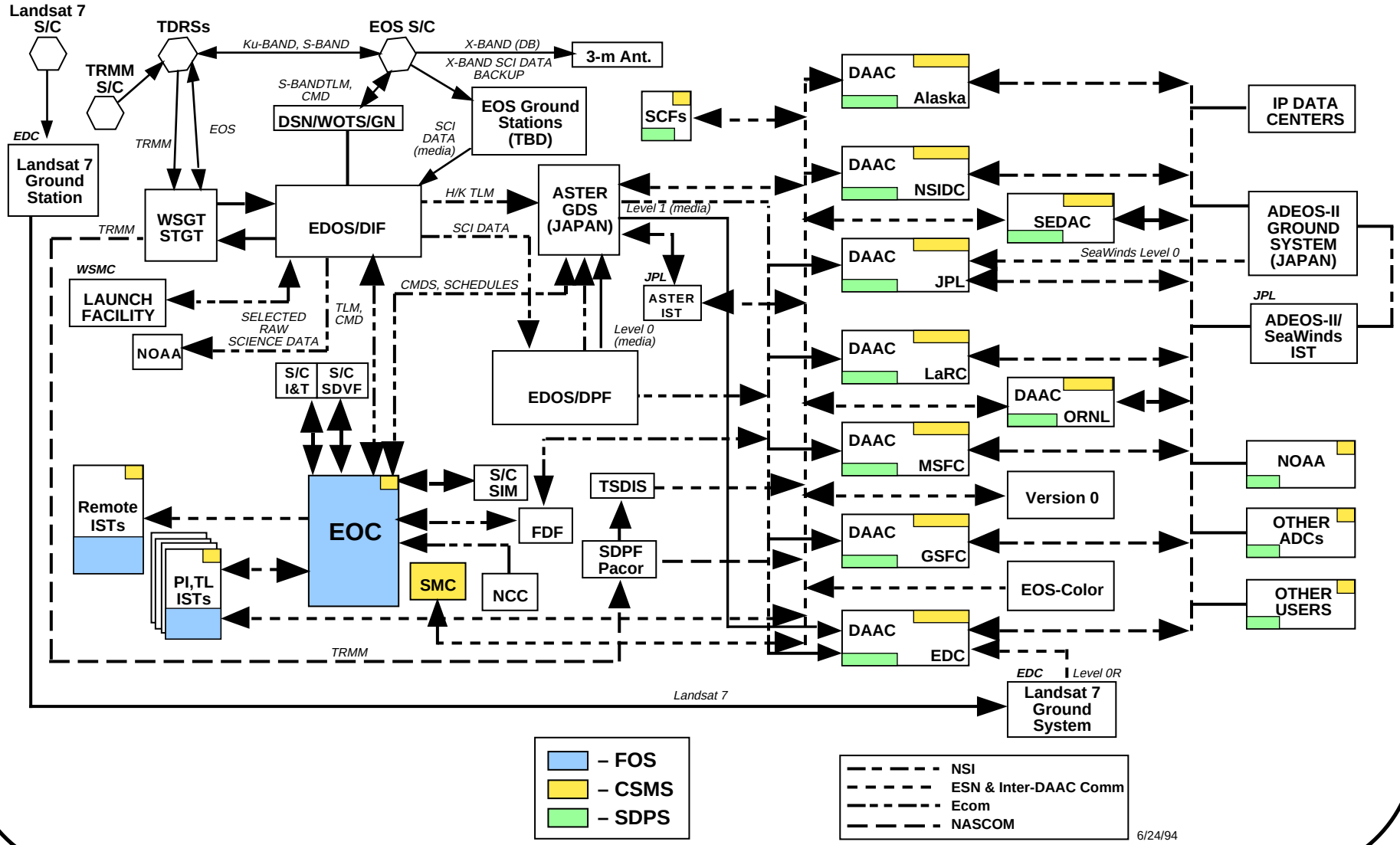

EOSDIS

EOSDIS System-Level Development Activities

IV&V contract reports independently to ESDIS management

Systems Management Office (SMO) responsibilities:

- System-level requirements management
- Interface management
- System-level integration
- Integration schedules
- Ground system test coordination
- End-to-end ground systems operations concept
- Coordination of systems engineering in development org's