Cross-DAAC Scheduling/ Planning

Gary Forman/Carl Solomon

15 February 1995

Road Map for Planning & Processing Presentation

Overview

- **Concept Drivers, Key Features**
- **Production Management Flow**

Software Model

COTS/Prototypes

- **Evaluation**
- **OTS and Software Reuse**

Scenarios

Cross DAAC Scheduling/Planning

Other Data Processing CIs

- **AI&T Tools**
- **Science Data Preprocessing**

Hardware

Issues

Cross-DAAC Scheduling/ Planning

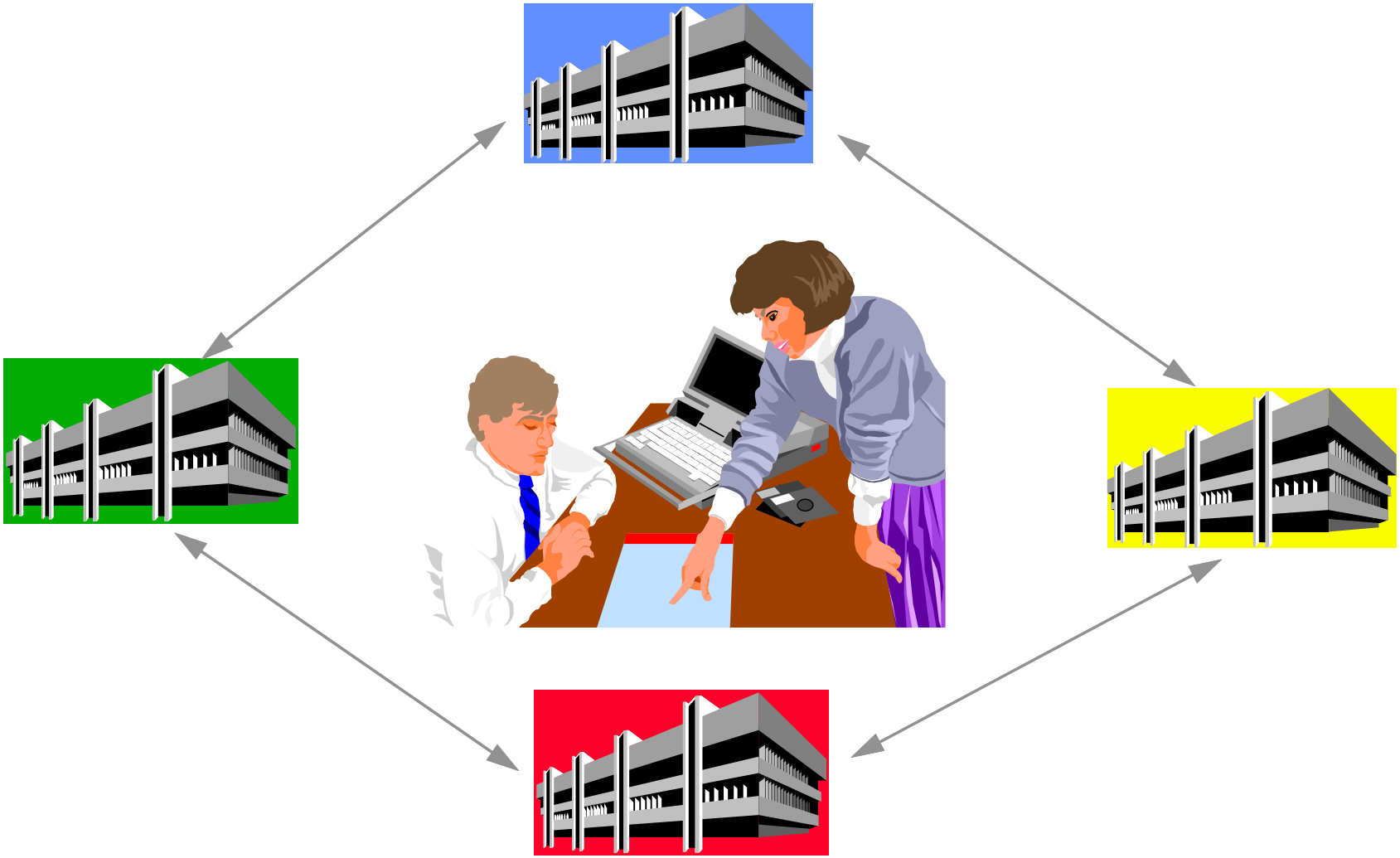

Requirements Overview

Scheduling requirements for the DAAC P&S:

- **Support and maintain allocation of ground events to resources**
- **Support and maintain priorities for scheduling ground events**
- **Support and maintain product generation information**
- **Generation of schedules**
- **Scheduling of directives for ground events and emergency situations**
- **Conflict identification and analysis**
- **Exchange scheduling/conflict information with the SMC and other sites**

Scheduling requirements for the SMC:

- **Reuse of the capability deployed at the sites**
- **Conflict identification, analysis and resolution**

Resource Planning Scenario

Example:

Scheduling software upgrade across DAACs

1) **SMC evaluates upgrade requirements**
   a) **Resource Requirements at each site**
   b) **Time requirements for completion established**

2) **Site production/resource schedules reviewed**
   a) **Impact on product schedules**
   b) **Impact on user community**

3) **Re-plan request sent to DAACs**
   a) **Candidate schedule(s) for upgrade**
   b) **Resource requirements for upgrade**
   c) **Guidelines for implementation of upgrade**

Resource Planning Scenario

4) Each DAAC performs impact analysis of resource requirements
   a) Current resource allocations reviewed
   b) Using guidelines from SMC, new resource allocation plan is generated

5) Each DAAC performs impact analysis on product schedules
   a) Using candidate resource changes DAAC planner runs "what-if" scenarios against schedule
   b) Policy and priorities reviewed for impact

6) Each DAAC provides SMC candidate plan for their upgrade
   a) Plan based on policy and local requirements
   b) DAACs will have assessed overall impact based on subscription to other DAAC schedules

7) SMC reviews, coordinates and distributes approved upgrade plan

Scheduling/Status Interactions

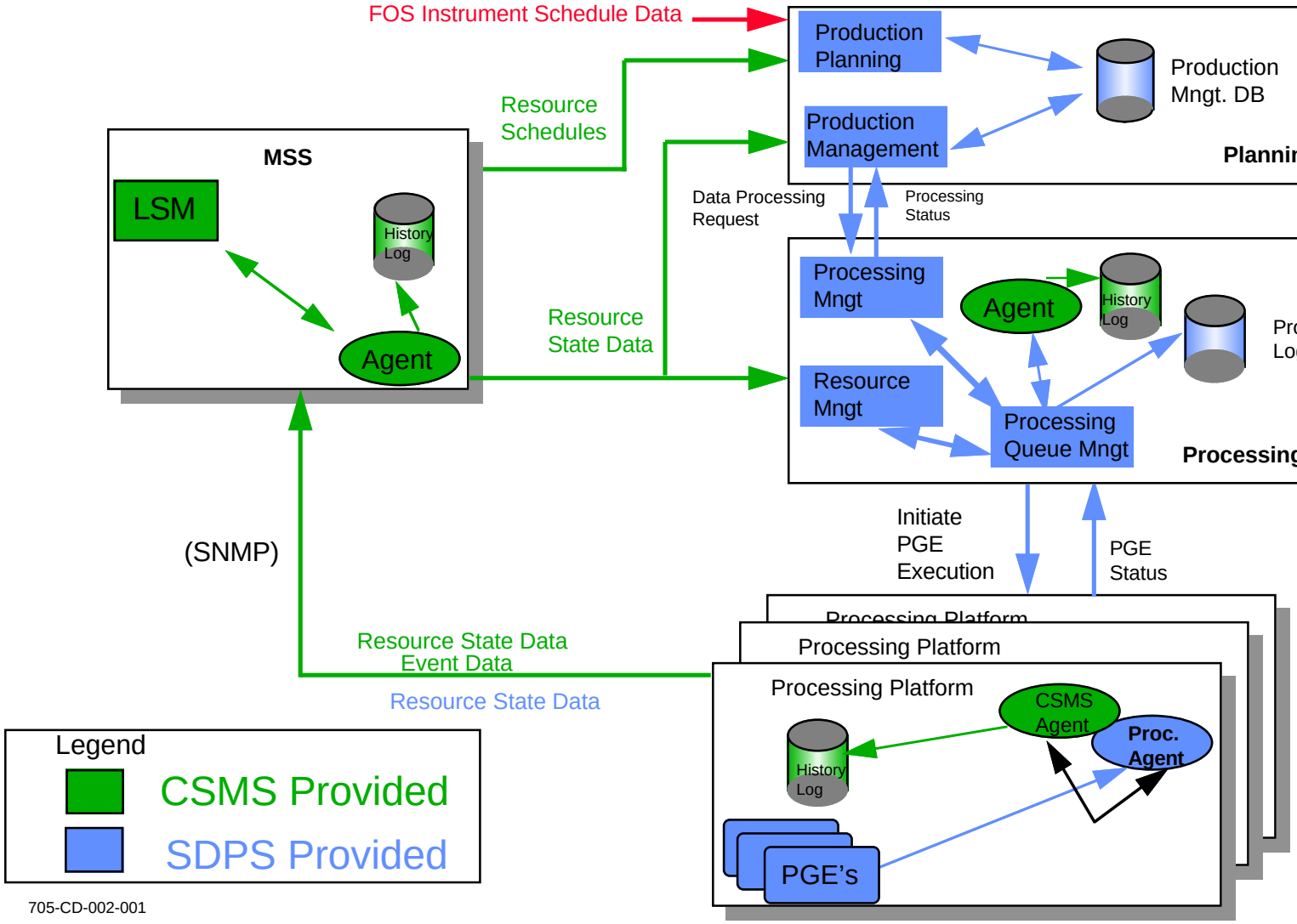

Inter-DAAC Dependencies-Evolution

TRMM Timeframe

Rel A

TRMM

Release A fully supports the relatively simple Inter-DAAC dependencies that will exist at TRMM launch and beyond till EOS AM-1.

Rel B

At EOS AM-1 launch the Inter-DAAC dependencies become more complicated.

AM-1

Design accommodates complexities required for Release B.

To support AM-1 and beyond, the SDPS and CSMS will provide Inter-DAAC conflict resolution.

TRMM Mission Key Interfaces - GSFC, LaRC, MSFC

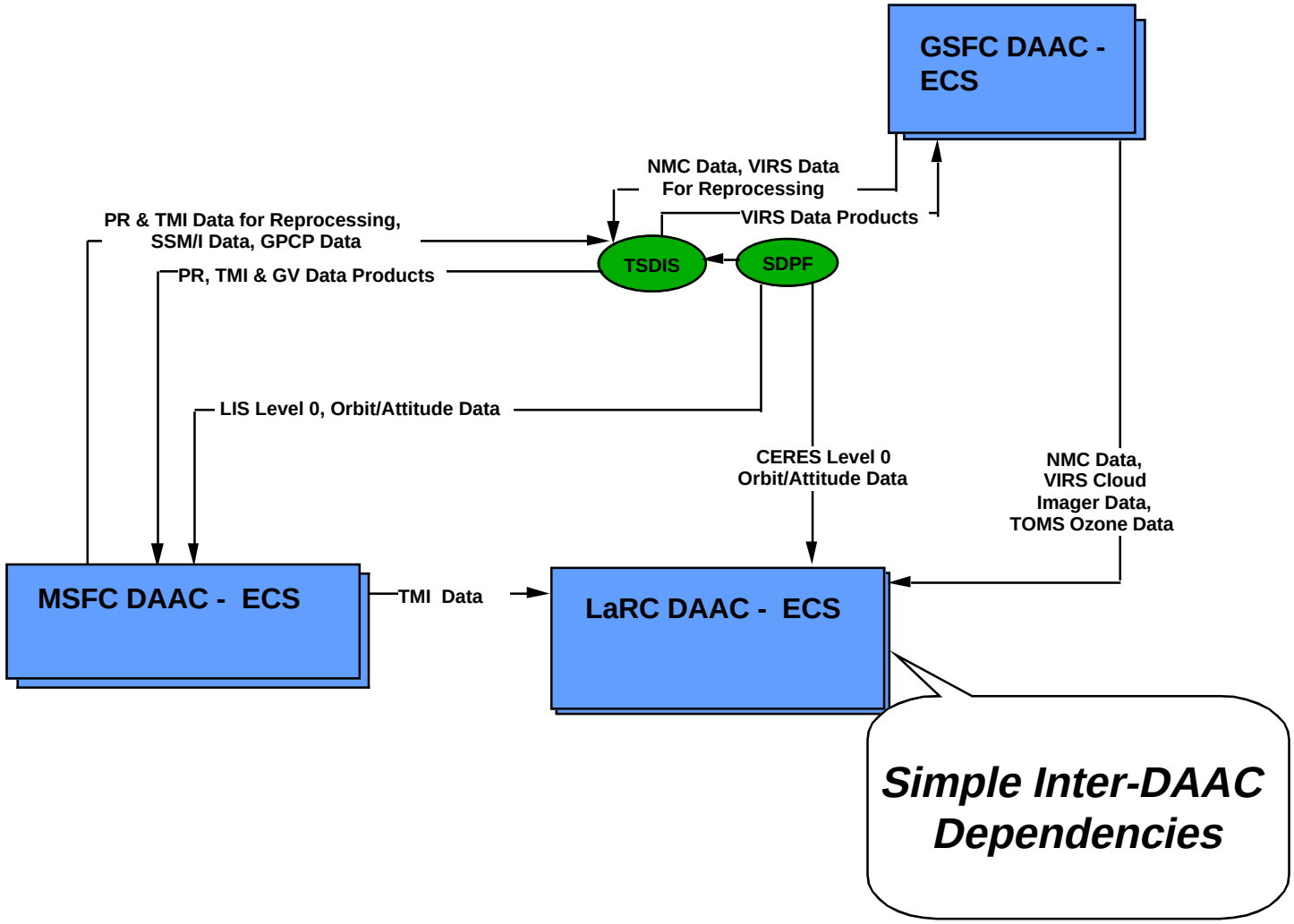

EOS AM-1
Cross-DAAC Dependencies

The Process Named...	Running At...	Reads as Input the File...	Which is Archived At...	But Which Was Created At...	By the Process Named..
MOD12:L3:3MN:I	EDC	MOD02_L1B_G	GSFC	GSFC	MOD02:L1B:G
MOD12:L3:3MN:I	EDC	MOD03_L1A_G	GSFC	GSFC	MOD03:L1A:G
MOD09:L3:9DY:G	EDC	MOD03_L1A_G	GSFC	GSFC	MOD03:L1A:G
MOD12:L3:3MN:I	EDC	MOD35_L2_G	GSFC	GSFC	MOD35:L2:G
AST_PGE_04	EDC	MOD30_L2_G	GSFC	GSFC	
AST_PGE_05	EDC	MOD30_L2_G	GSFC	GSFC	
MOD09:L3:9DY:G	EDC	MIS-1B2SS	LaRC	LaRC	MISP1B4
AST_PGE_04	EDC	MIS-2AS	LaRC	LaRC	MISP2AS
AST_PGE_05	EDC	MIS-2AS	LaRC	LaRC	MISP2AS
AST_PGE_04	EDC	MIS-AC	LaRC	Unknown	Unknown
AST_PGE_05	EDC	MIS-AC	LaRC	Unknown	Unknown
MOD09:L3:9DY:G	EDC	MIS-AC	LaRC	Unknown	Unknown
AST_PGE_09	EDC		NSIDC	NSIDC	MOD33:L3:WK:G
MOD12:L3:3MN:I	EDC		NSIDC	NSIDC	MOD33:L3:WK:G
MOD12:L3:3MN:I	EDC		NSIDC	NSIDC	MOD42:L3:WK:G
MOD09:L2:I	GSFC		EDC	EDC	MOD12:L3:3MN:I
MOD10:L2:I	GSFC		EDC	EDC	MOD12:L3:3MN:I
MOD14:L2:G	GSFC		EDC	EDC	MOD12:L3:3MN:I
MOD41:L2:H	GSFC		EDC	EDC	MOD12:L3:3MN:I
MOD06:L2:G	GSFC	MOD09_L2_G	EDC	GSFC	MOD09:L2:I
MOD10:L2:I	GSFC	MOD09_L2_G	EDC	GSFC	MOD09:L2:I
MOD14:L2:G	GSFC	MOD09_L2_G	EDC	GSFC	MOD09:L2:I
MOD13:L2:G	GSFC	MOD09_L2_G	EDC	GSFC	MOD09:L2:I
MOD29:L2:G	GSFC	MOD09_L2_G	EDC	GSFC	MOD09:L2:I
MOD11:L3:WK:G	GSFC	MOD11_L2_G	EDC	GSFC	MOD11:L2:I
MOD10:L2:I	GSFC	MOD11_L2_G	EDC	GSFC	MOD11:L2:I
MOD14:L2:G	GSFC	MOD11_L2_G	EDC	GSFC	MOD11:L2:I
MOD29:L2:G	GSFC	MOD11_L2_G	EDC	GSFC	MOD11:L2:I
MOD41:L2:H	GSFC	MOD11_L2_G	EDC	GSFC	MOD11:L2:I
MOD11:L2:I	GSFC	MOD13_L2_G	EDC	GSFC	MOD13:L2:G
MOD14:L2:G	GSFC	MOD13_L2_G	EDC	GSFC	MOD13:L2:G
MOD14:L2:G	GSFC	MOD14_L2_G	EDC	GSFC	MOD14:L2:G
MOD11:L2:I	GSFC	MOD10_L2_G	NSIDC	GSFC	MOD10:L2:I
MOD09:L2:I	GSFC	MOD29_L2_G	NSIDC	GSFC	MOD29:L2:G
MISP2AS	LaRC		GSFC	GSFC	DAO
MISP2AS	LaRC		GSFC	GSFC	DAO
MISP2AS	LaRC		GSFC	GSFC	DAO
MISP2AS	LaRC	MOD02_L1B_G	GSFC	GSFC	MOD02:L1B:G
MISP2AS	LaRC	MOD05_L2_G	GSFC	GSFC	MOD05:L2:G
MISP2TC	LaRC	MOD06_L2_G	GSFC	GSFC	MOD06:L2:G
MISP2AS	LaRC	MOD06_L2_G	GSFC	GSFC	MOD06:L2:G
MOPL2-E	LaRC	MOD06_L2_G	GSFC	GSFC	MOD06:L2:G
MISP2TC	LaRC	MOD35_L2_G	GSFC	GSFC	MOD35:L2:G
MISP2AS	LaRC	MOD35_L2_G	GSFC	GSFC	MOD35:L2:G
MOPL2-E	LaRC	MOD30_L2_G	GSFC	GSFC	
4aF	LaRC	CERX05 (VIRS)	GSFC	GSFC	Root
4bAF	LaRC		GSFC	GSFC	Unknown
4aF	LaRC	CERX08 (TMI)	MSFC	MSFC	Root
4bAF	LaRC	CERX08 (TMI)	MSFC	MSFC	Root

Inter-DAAC Dependencies-EOS AM-1 Timeframe-Policy

A joint ESDIS-DAAC policy is necessary to set default production rules regarding how inter-DAAC planning is performed.

For example:

1. Langley Production Planner assumes that MODIS Level 1B data will be available once/orbit. (based on ESDIS-DAAC policy)

2. Goddard creates Candidate Plan and associated Data Availability Schedule (DAS).

The DAS shows:

- ***MODIS Level 1B is available every 2 orbits due to change in priorities at GSFC DAAC.***

3. Langley uses latest available DAS to update their Candidate Plan.

We will continue to work with the AHWGP, DAAC, Instrument Teams, and ESDIS to work out an appropriate policy.

Design Support for Inter-DAAC Planning and Scheduling

Design accommodates Inter-DAAC Conflict Resolution via common access to planning data.

ECS-Wide "What-If" Analysis Supported at each DAAC and SMC.

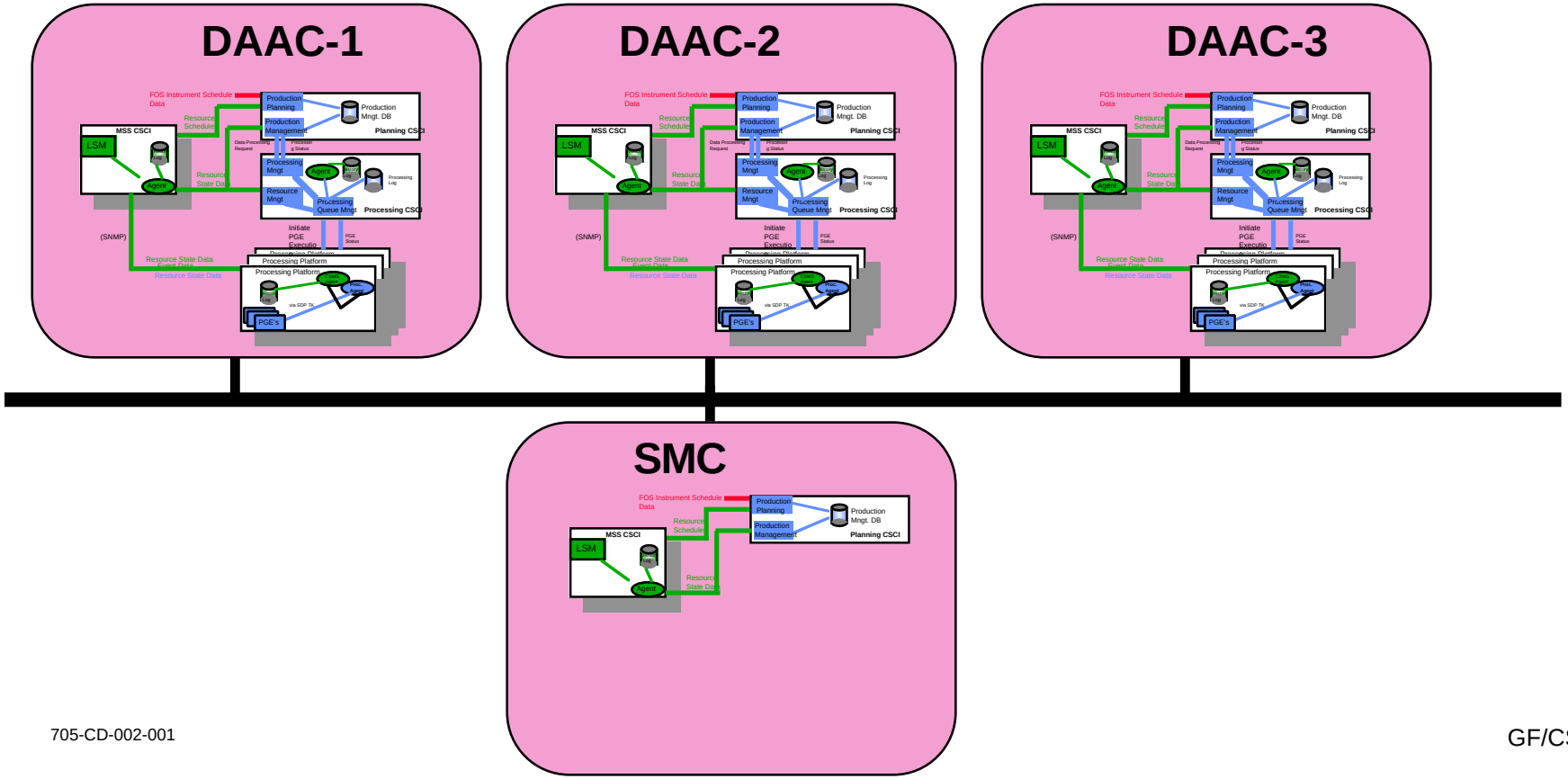

Inter-DAAC Dependencies-EOS AM-1 Scenario

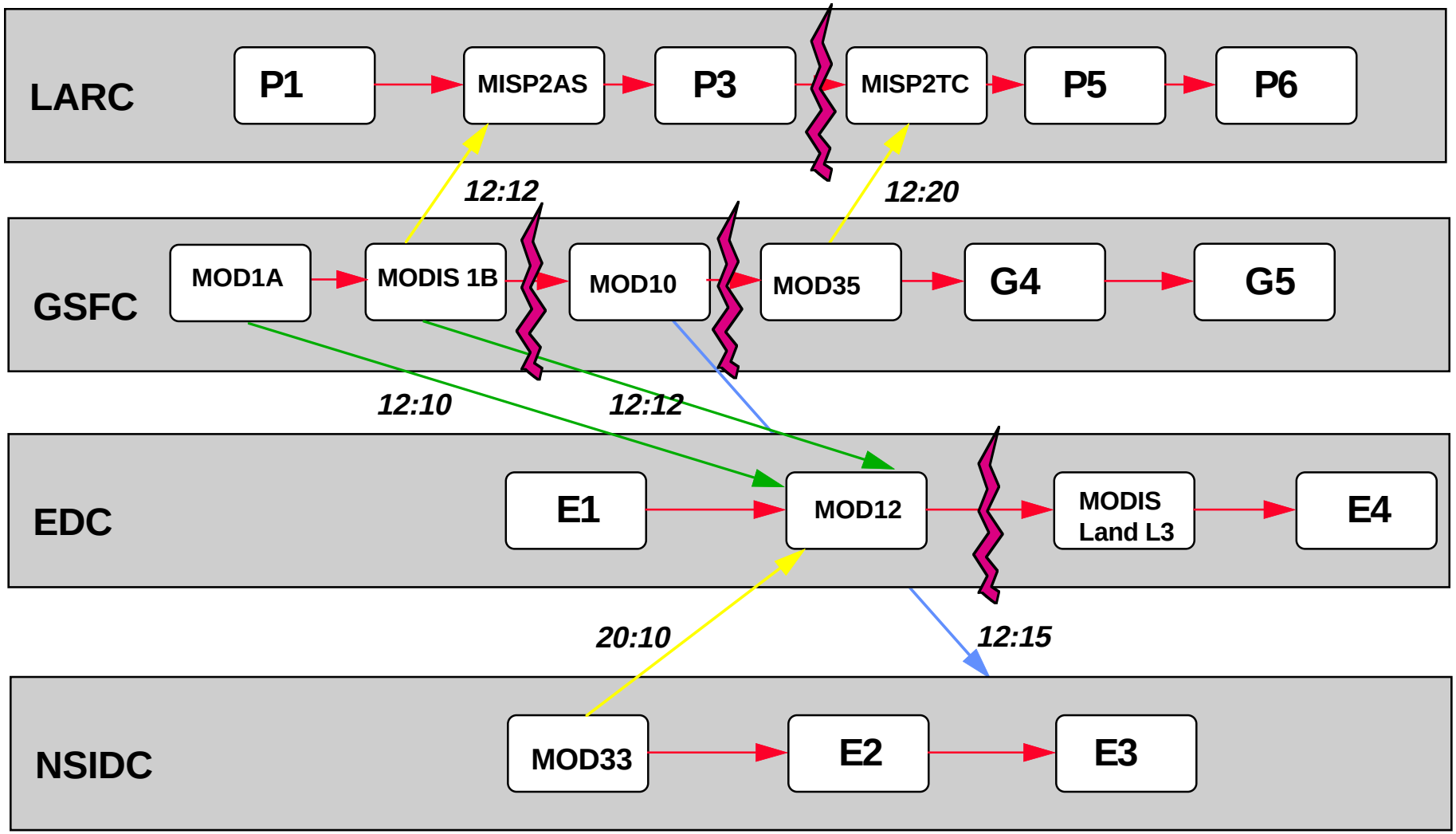

Integrated Planning and Scheduling Scenario - 1

STEP 1

1. DAACs develop individual candidate plans.
   - When the candidate plan is developed, the Planning Subsystem produces a Data Availability Schedule.
     - (Note: MSS provides Resource Availability Schedule as input to Plan creation process.)

1a. Each DAAC has a subscription to the proposed candidate plans from the other DAACs.

1b. Planning Software provides capability to view merged ECS-wide plan.

Integrated Planning and Scheduling Scenario - 2

Step 2

- **Conflict found by Langley Production Planner during Candidate Plan Creation for tomorrow's plan--**
  - ***GSFCMODIS L1B processing has been delayed for 12 hours to support special high-priority reprocessing job, and MISR product requires MODIS L1B as input.***
  - ***Langley wants to execute MISR for the next day to support Field Campaign.***

Integrated Planning and Scheduling Scenario - 3

Step 3

- DAACs coordinate in a cooperative fashion to resolve data availability or priority conflicts.
  - DAACs and SMC view ECS-wide planning data.
  - DAACs change priorities to help resolve ECS-wide conflicts.
  - SMC has access to all plans, and helps interpret policy to support conflict resolution .

EOS AM-1 Scenario-Replan

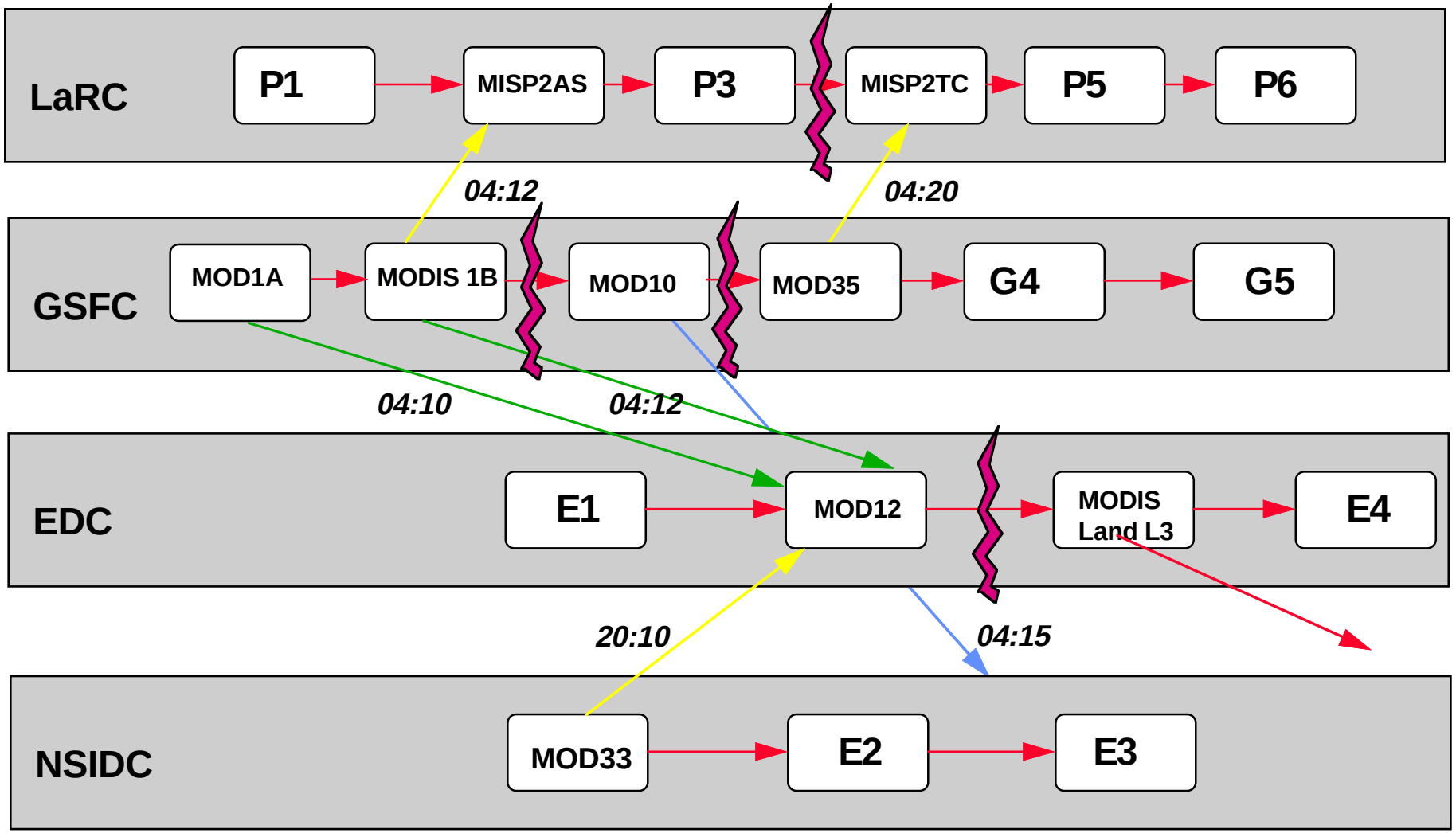

Integrated Planning and Scheduling Scenario - 4

Step 4

- DAACs create new plans based on new negotiated priorities
  - Planning Tool used to create new candidate plan

- All DAAC Production Managers (a person at each DAAC) plus SMC ECS-Wide Production Manager (another person) view new plan
- Updated ECS-Wide Plan analyzed to access impact of conflict resolution steps.