NETWORK ADMINISTRATION

ECS Pre-Release B Testbed Training

Objectives

- Overview of DAAC Network Topology
- Introduce HP OpenView Network Node Manager
- Begin and end an NNM session
- Add a network object
- Add a segment object
- Add an IP interface object
- View current network and system configuration
- View network address information
- View how traffic is routed through the network
- View the services available on a network node
- System monitoring

Testbed Overview

- **Limited bandwidth**
  - **EDC & NSIDC: Single shared FDDI ring and 2 Ethernet segments**
  - **NSIDC: 3 shared FDDI rings and 5 Ethernet segments**
- **Shares Release B0 resources**
  - **to Testbed DAACs via EBNet**
  - **to Internet via campus Exchange LAN and NSI**
- **Security implementation modeled after Release A**
- **Full Release B domain space implemented**
  - **edc.ecs.nasa.gov**

Sample of Hardware Components

SPARC Station 4

NCD X-Terminal

SGI Origin 2000 Server

FDDI Concentrator and Switch/ Router

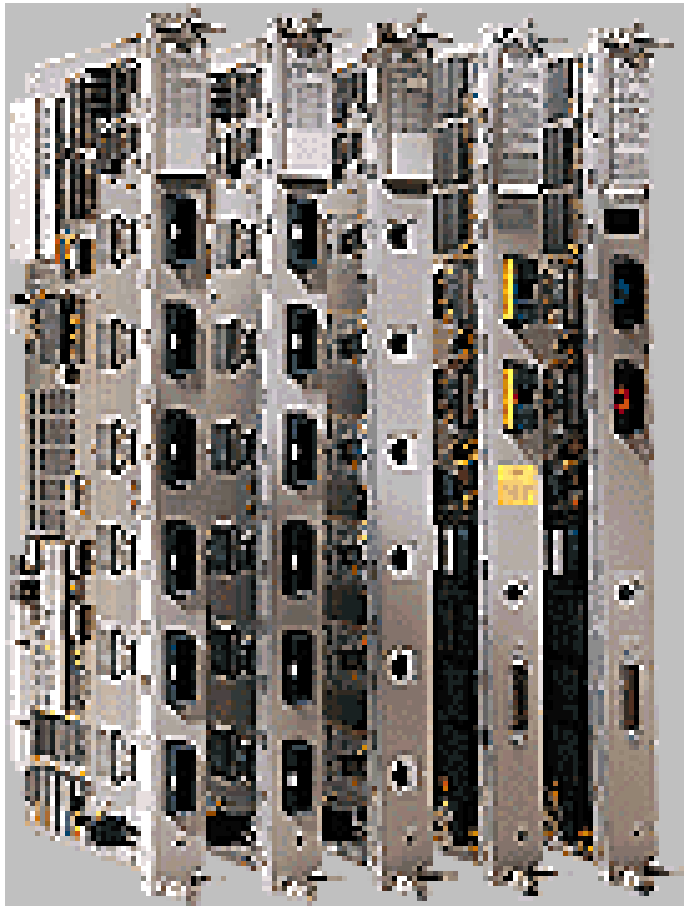

SynOptics/Bay Networks FDDI Switch/Hub

- **High bandwidth**
- **Supports 100 Mbps**

Cisco Series 7500 Router

Rear view

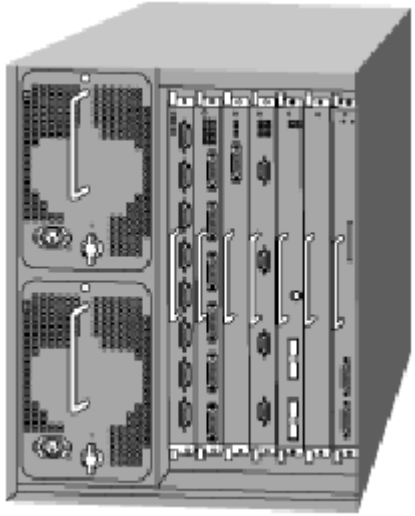

Front view

10BASE-T Ethernet Hub

- **Router to EBNet**
- **Router to Exchange LAN**
- **12-24 Ethernet ports PLUS 1 FDDI port**

EDC Network Overview

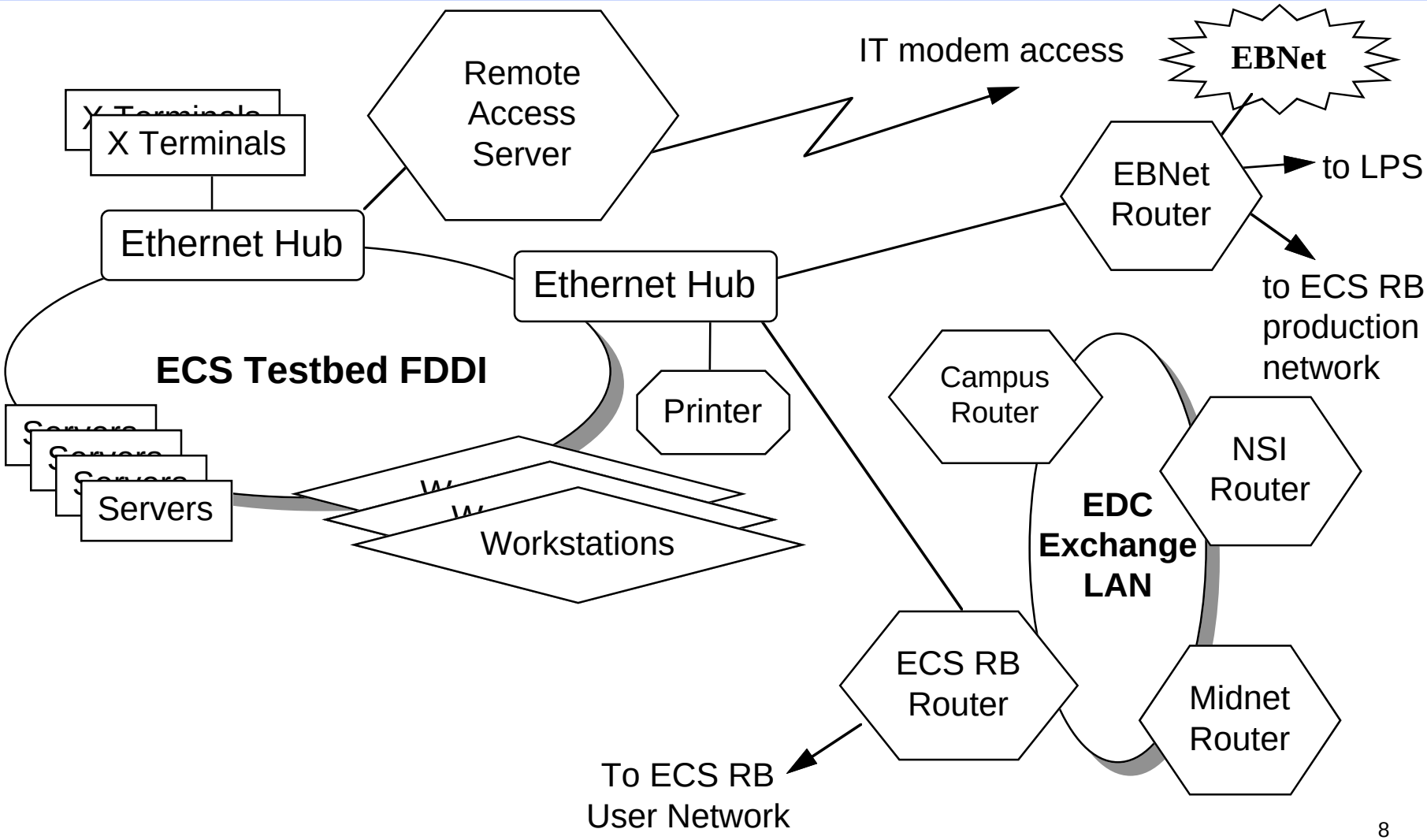

EDC DAAC
Network Detail

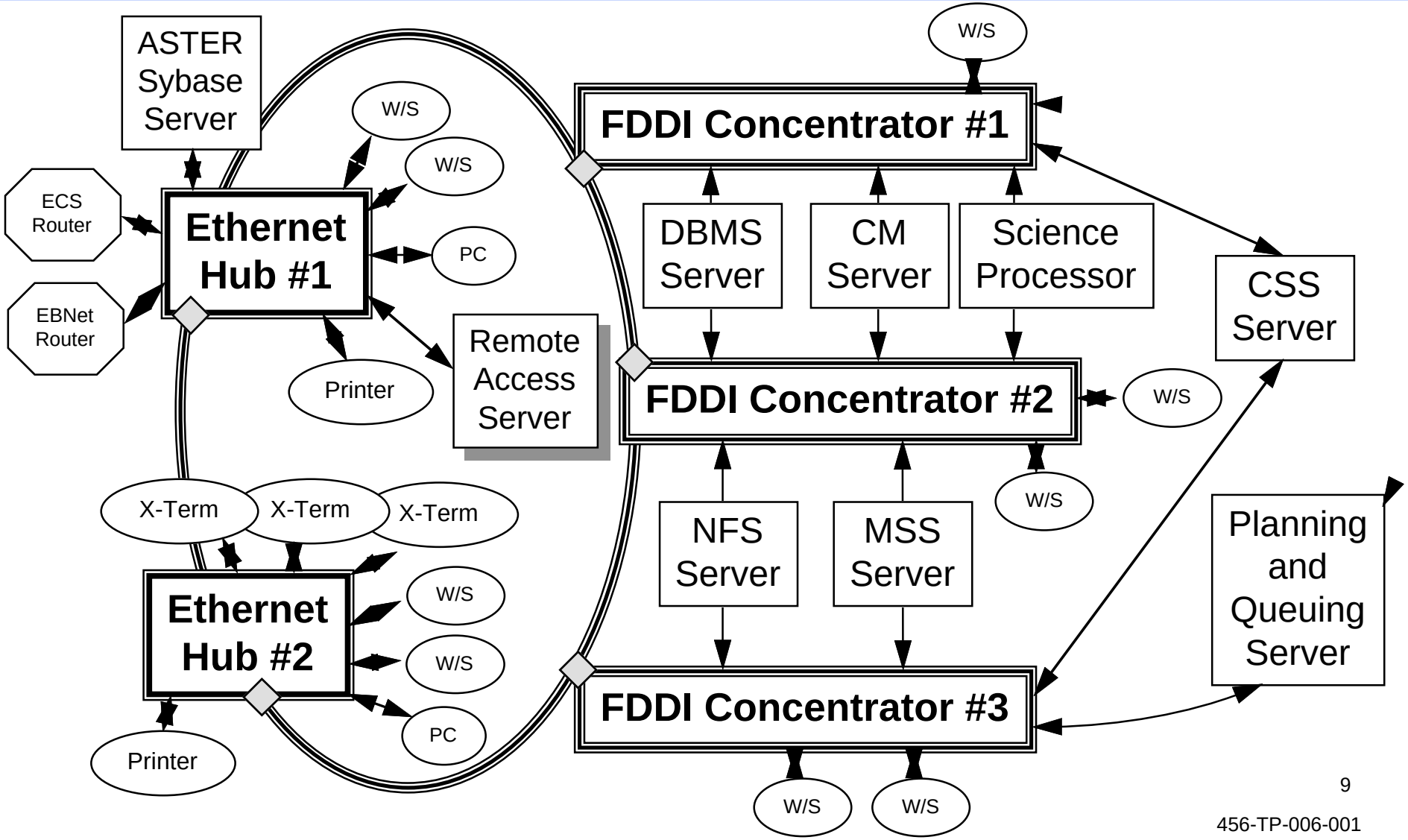

EDC Testbed
Route Advertisements

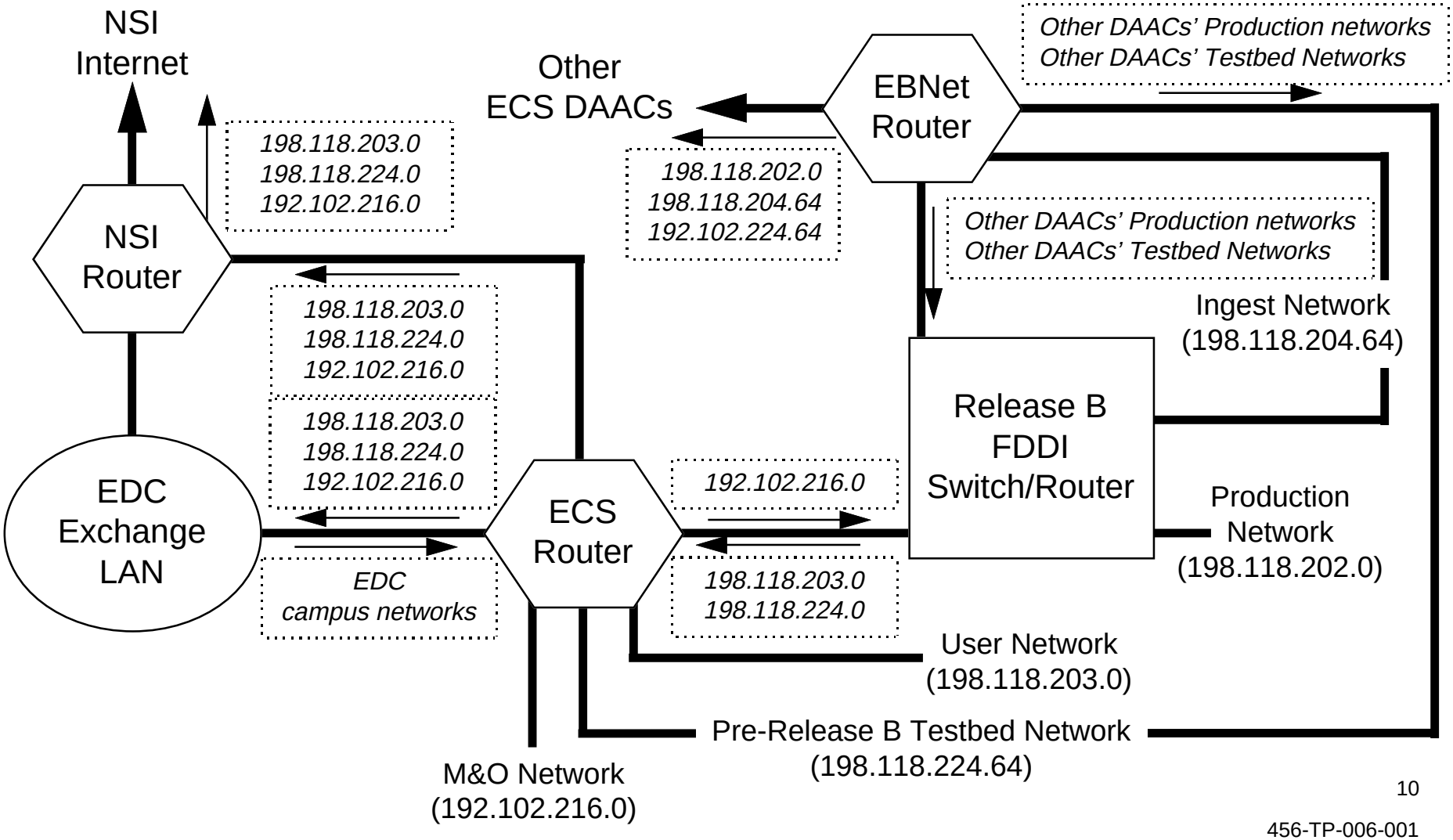

NSIDC Network Overview

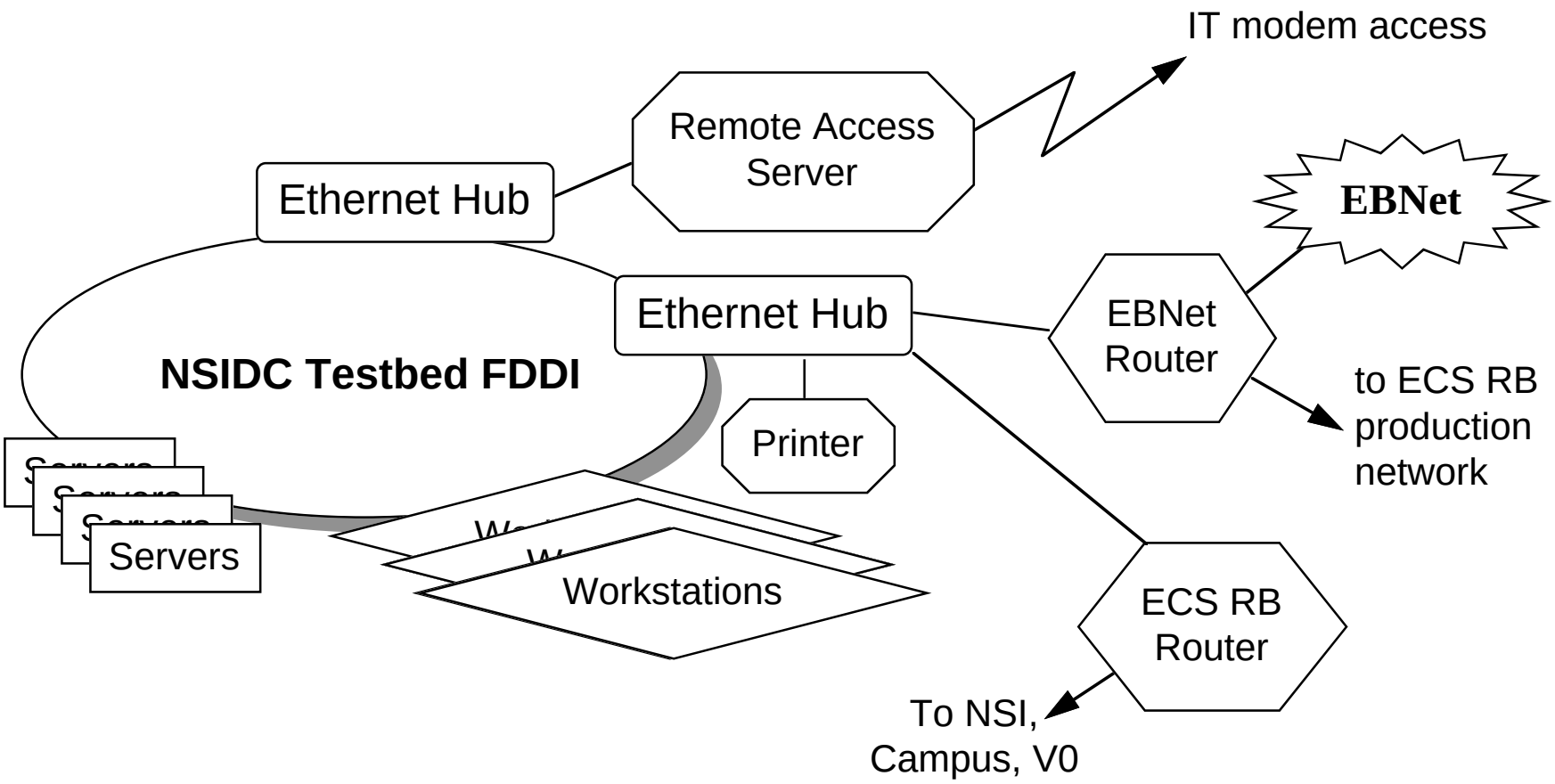

NSIDC DAAC
Network Detail

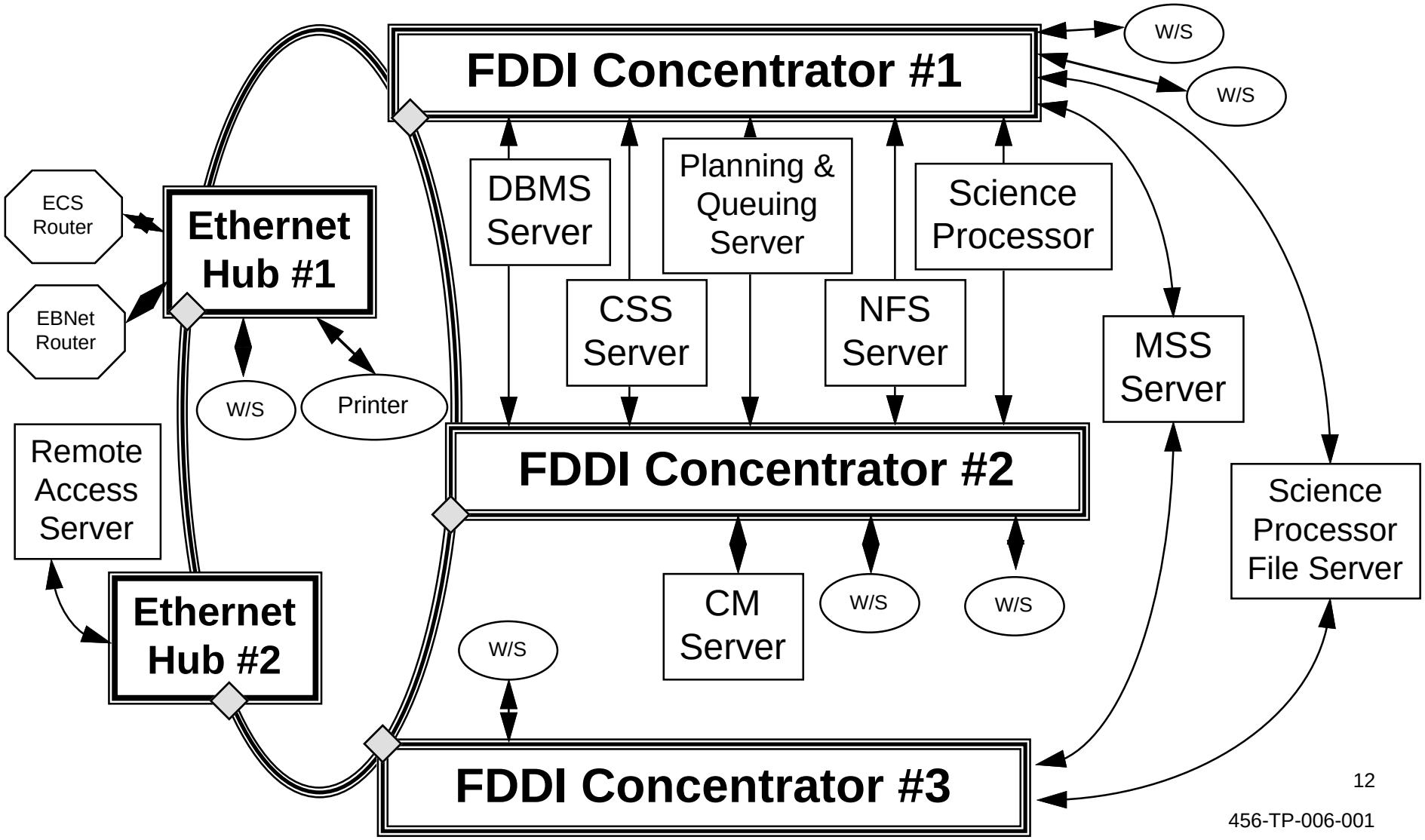

NSIDC Testbed
Route Advertisements

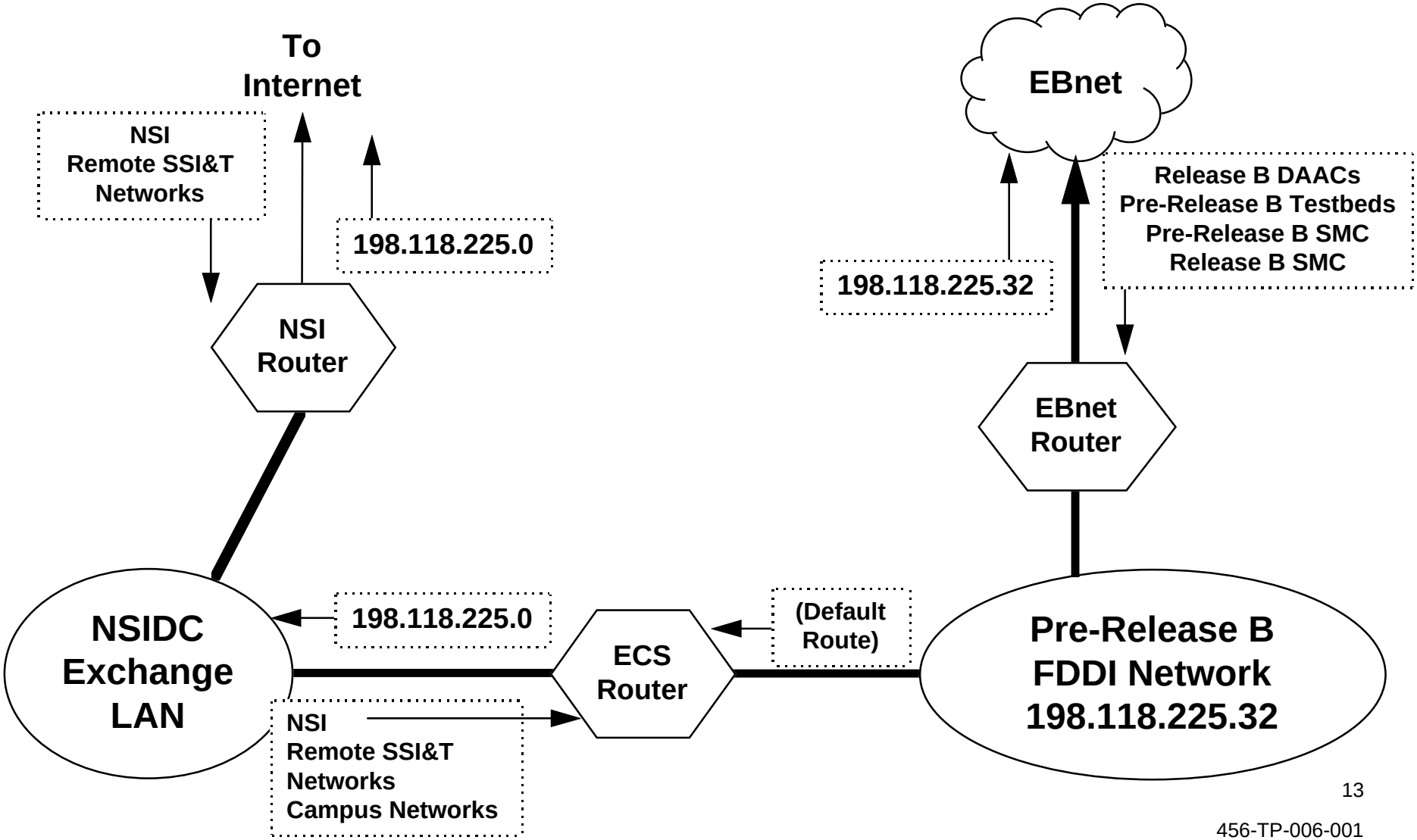

LaRC DAAC Network Overview

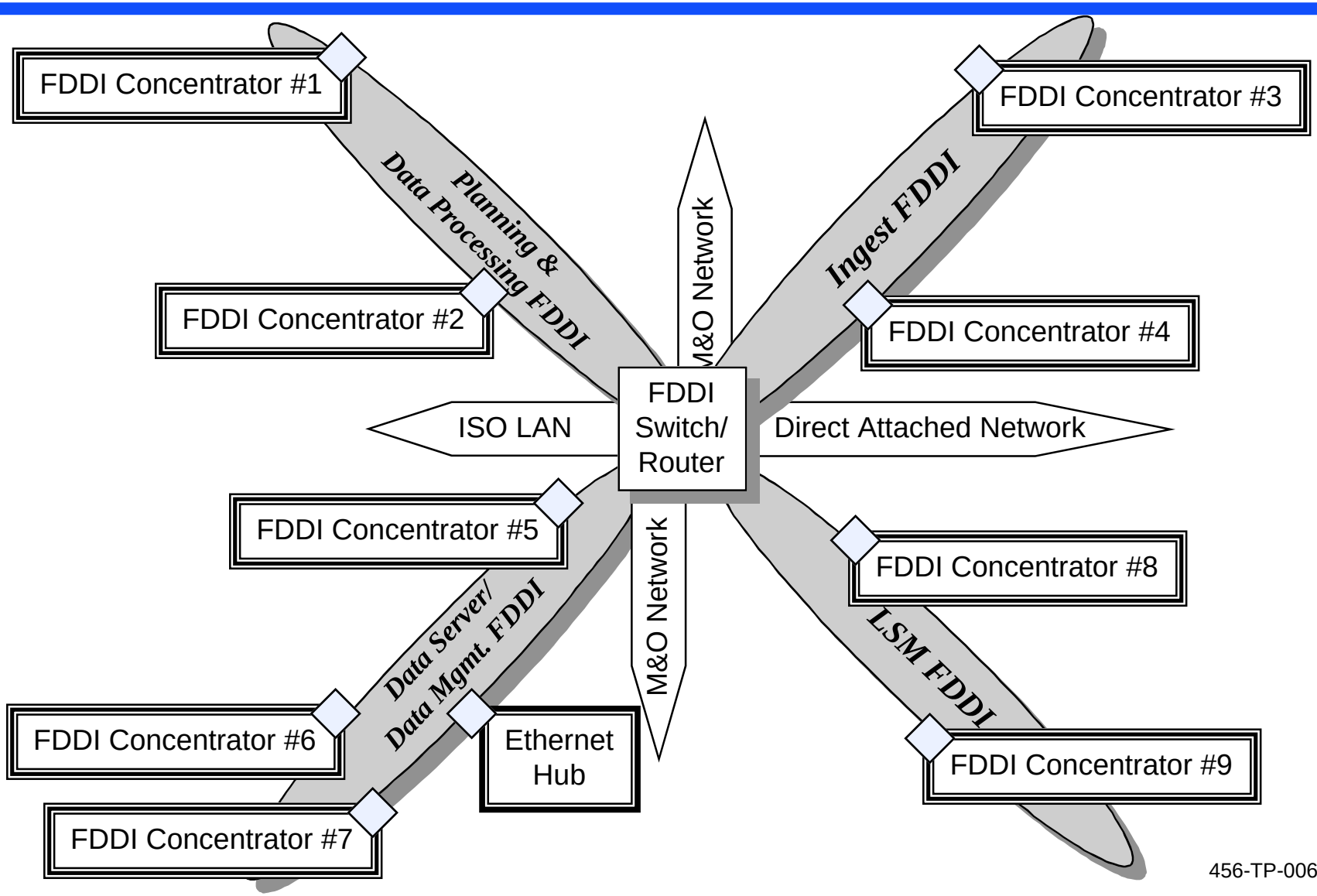

LaRC DAAC Network Detail (1) Planning & Data Processing FDDI and LSM FDDI

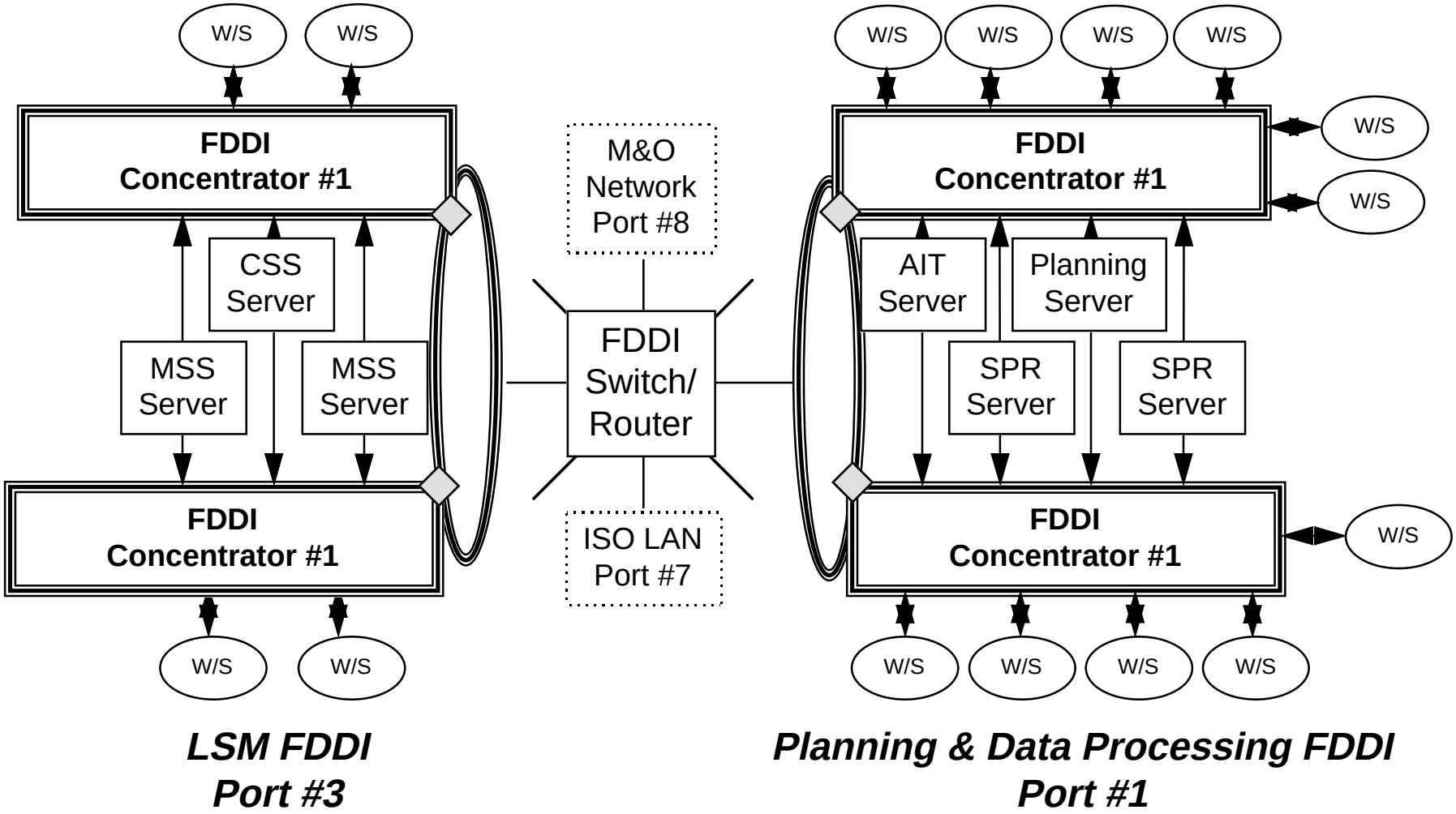

LSM FDDI Port #3

Planning & Data Processing FDDI Port #1

LaRC DAAC Network Detail (2) Data Server/Data Mgmt. FDDI and Ingest FDDI

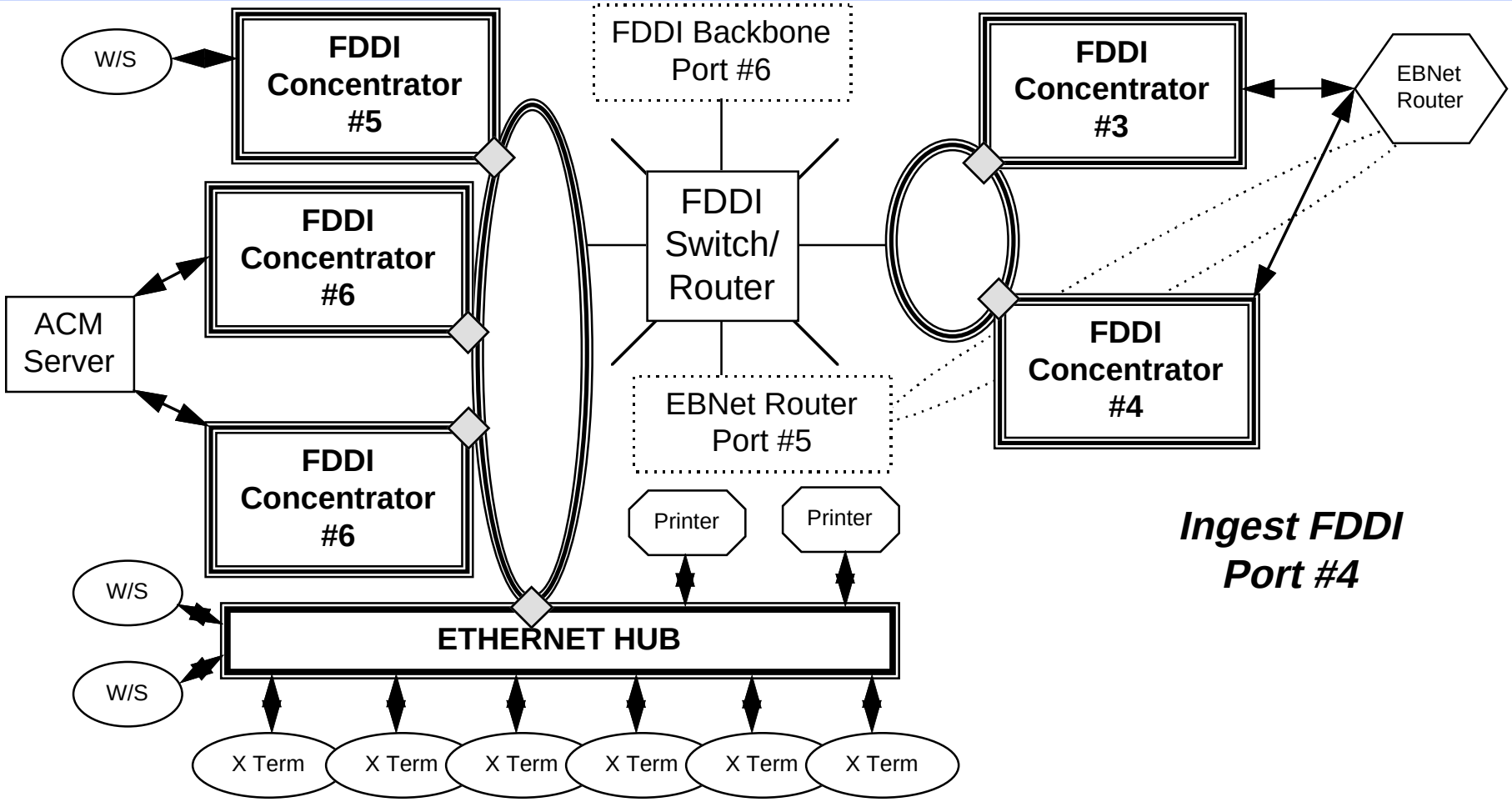

Ingest FDDI Port #4

Data Server/ Data Management FDDI Port #2

LaRC Testbed Route Advertisements

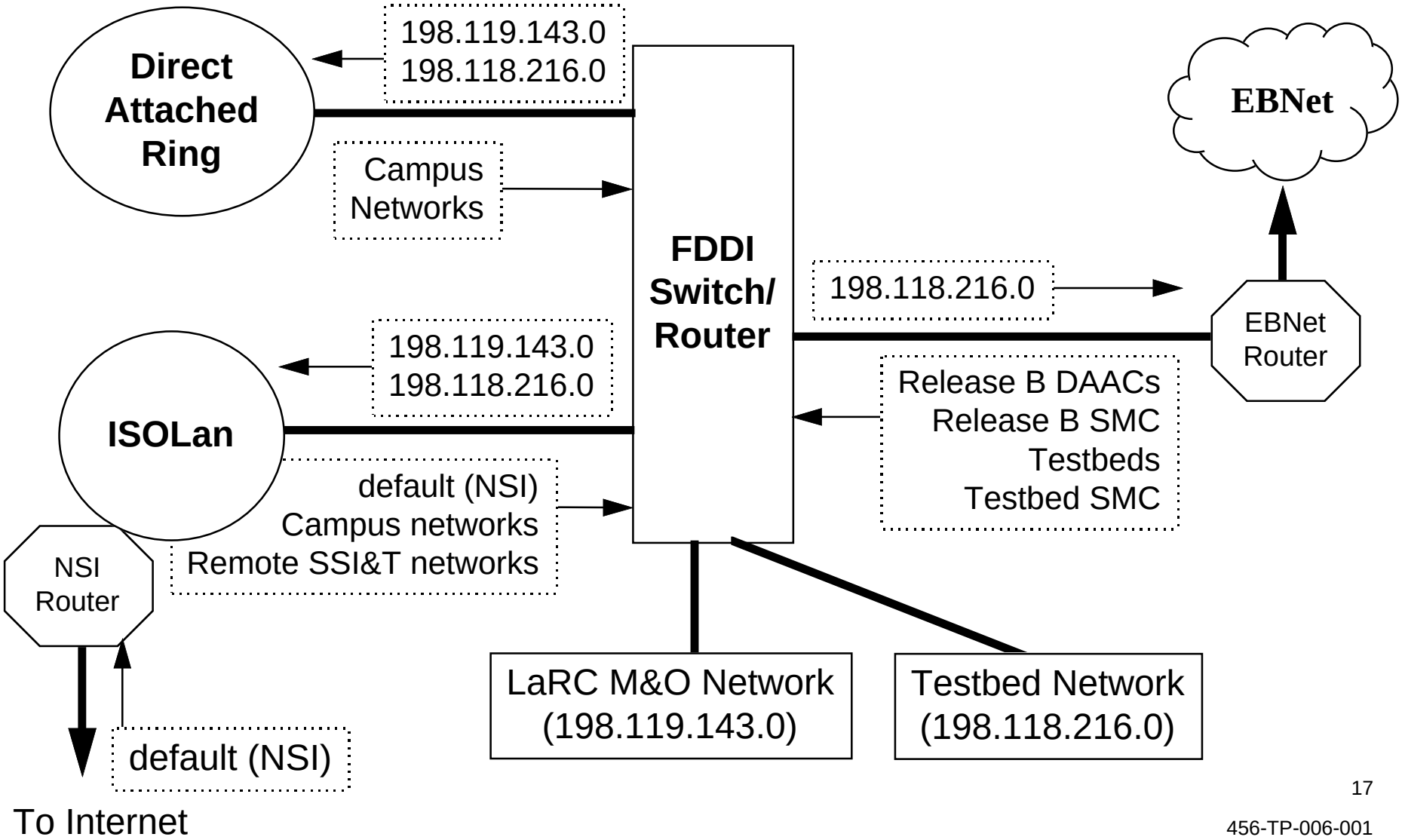

Network Node Manager

- Dynamic discovery of network topology
- Specify management region
- Automatically draw graphical map of network topology
- Perform operations on specific objects
- Search for objects based on specific attributes
- Displays SNMP traps for diagnosing problems and connectivity
- Build and access MIB
- Graph statistical trends
- User configurable thresholds
- Access remote terminals and remote system administration

The OpenView Framework

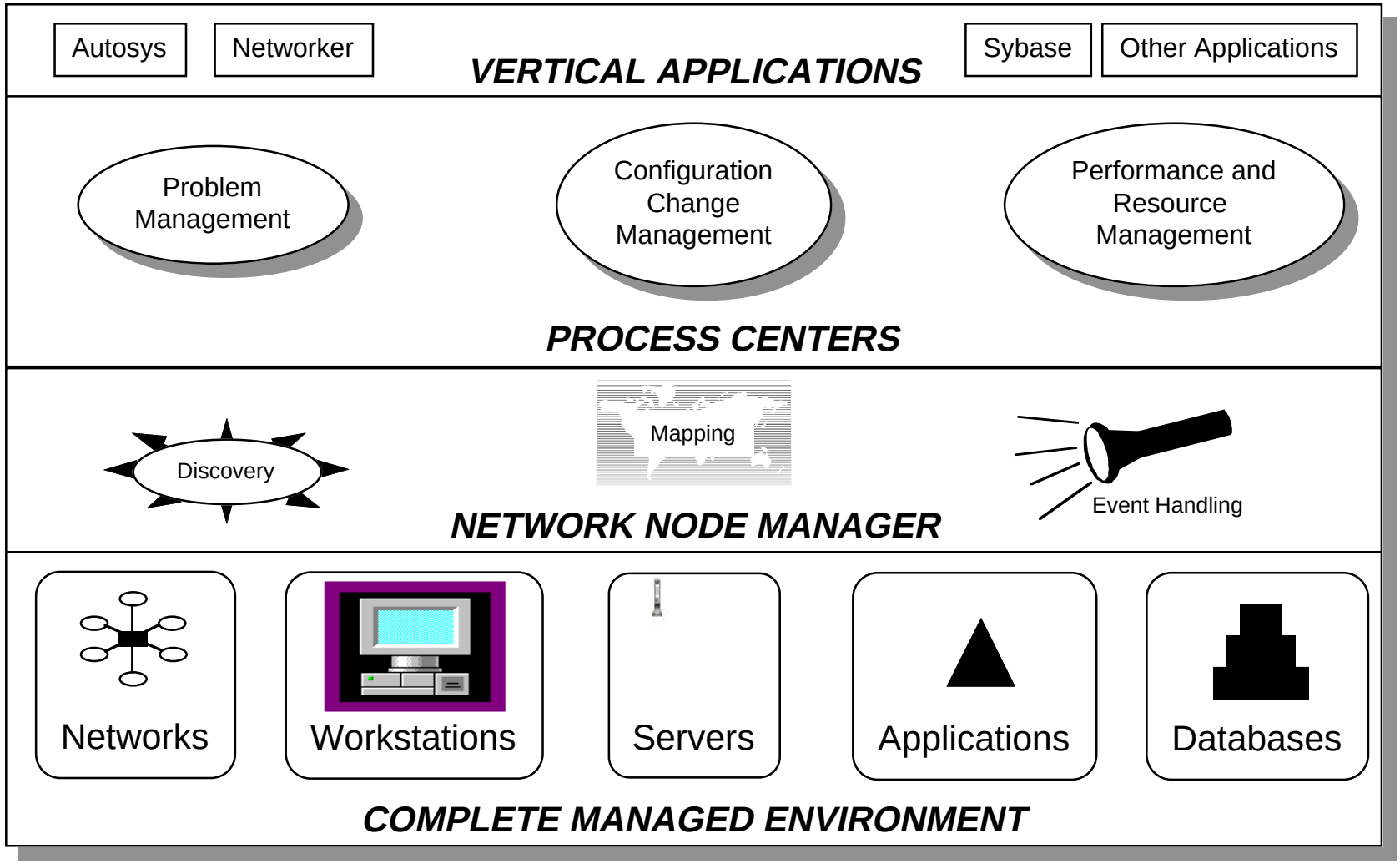

Sample NNM Map

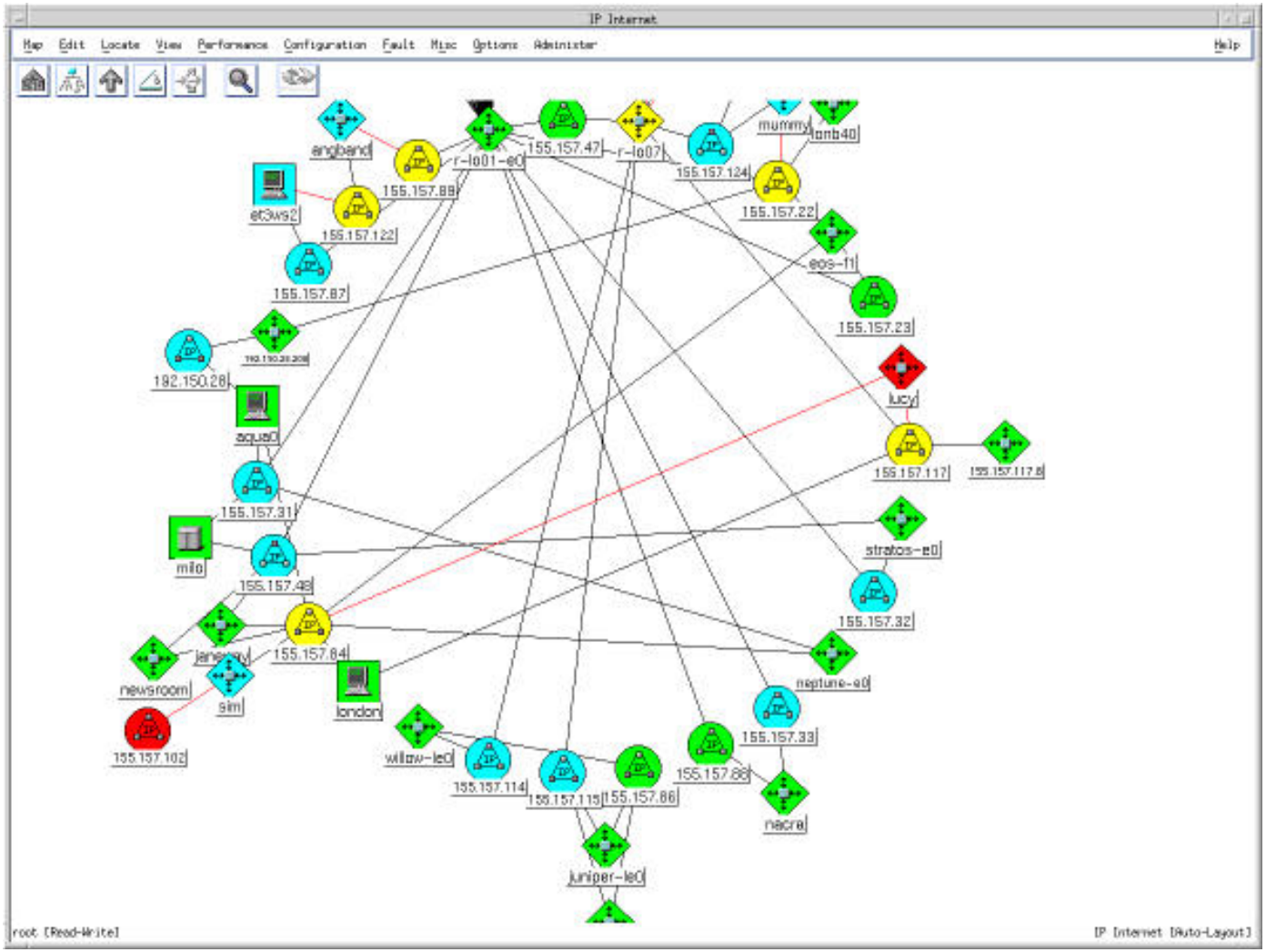

How NNM Works

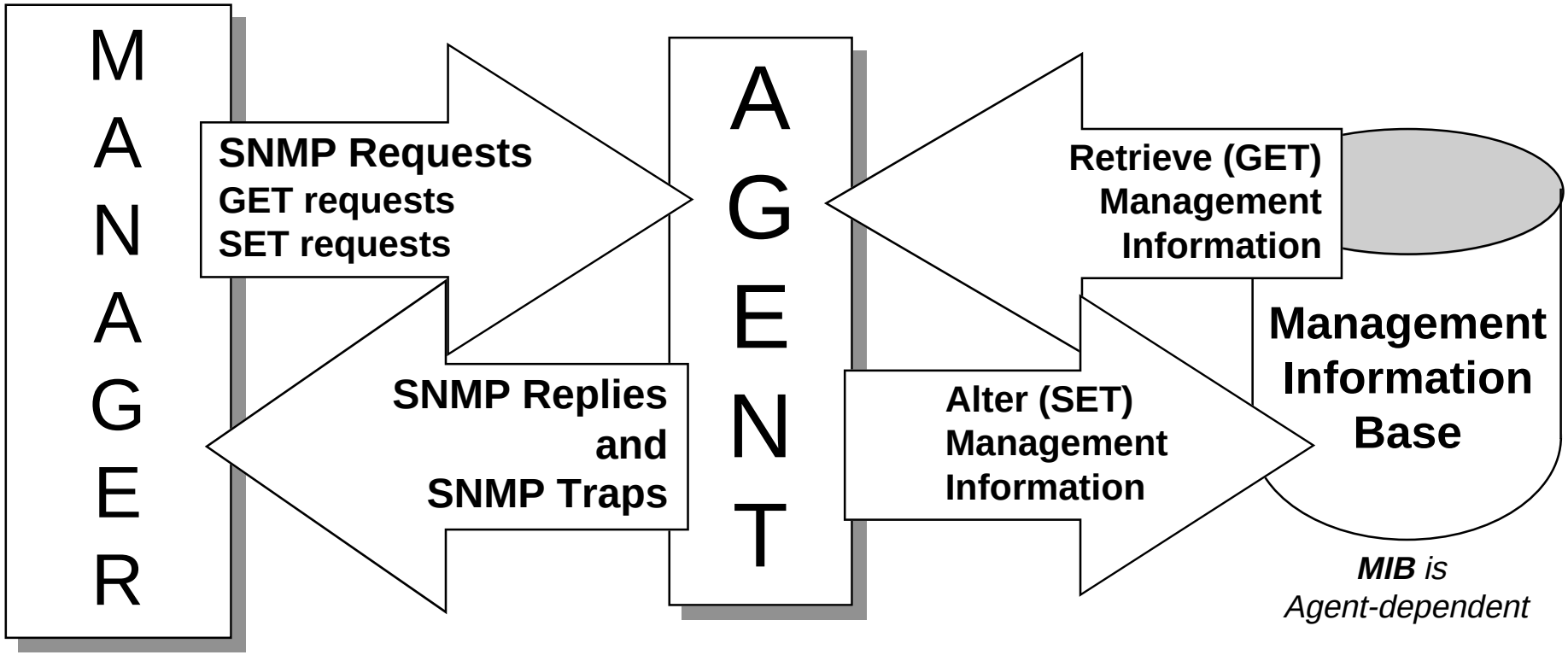

How the Map Interface Works

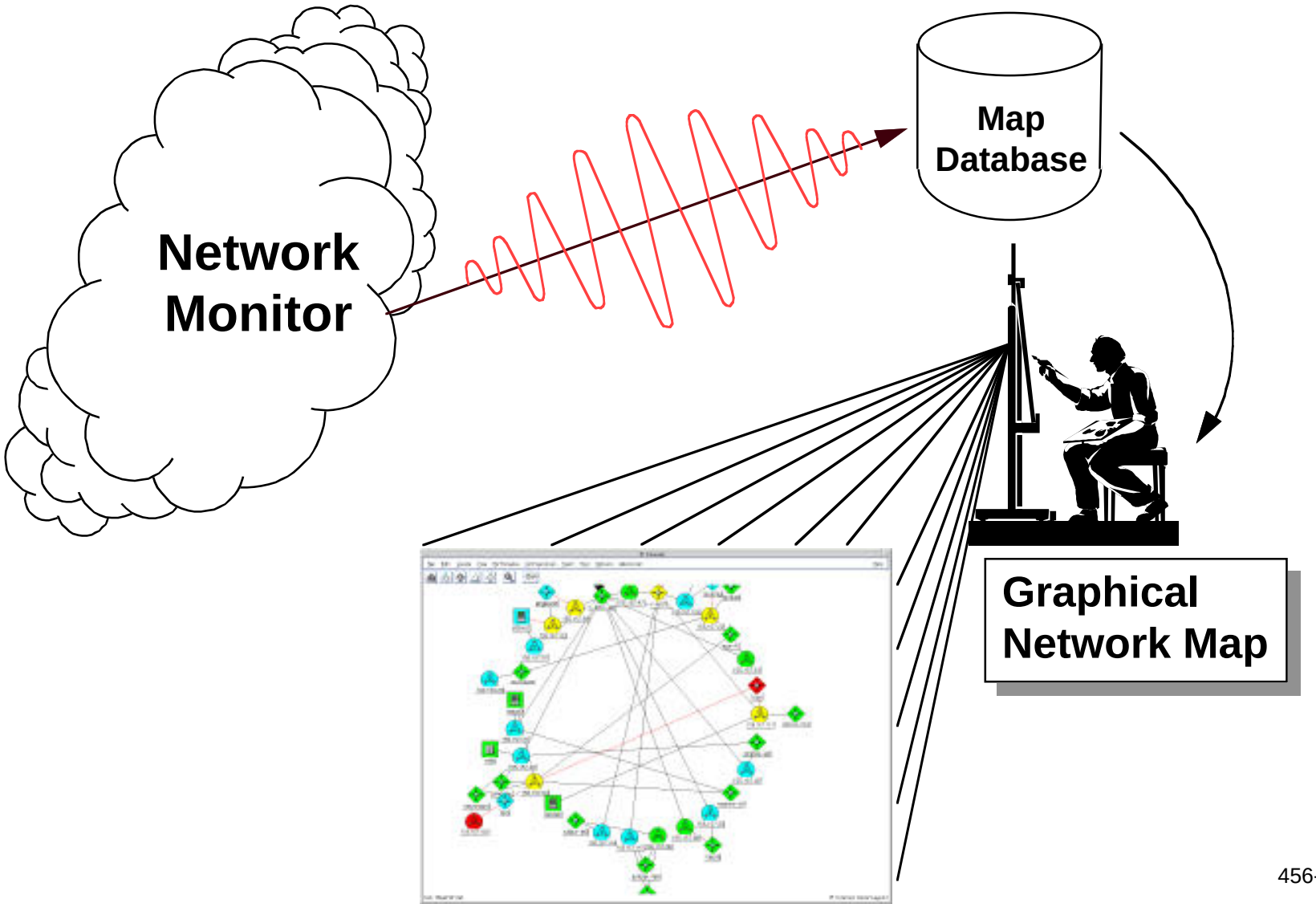

Universal Pathnames

/usr/OV/bin on HP-UX 9.x

$OV_BIN

/opt/OV/bin on HP-UX 10.x

Start an NNM Session

1. **Check to see that the HPOV background processes are running.**

   Use $OV_BIN/ovstatus to check.

   - ✓ **ovspmd subprocess monitoring daemon.**
   - ✓ **netmon polls SNMP agents to discover topology.**
   - ✓ **ovtopmd maintains network topology database.**
   - ✓ **ovwdb controls the object database.**
   - ✓ **trapdb logs and forwards events to other processes.**
   - ✓ **ovactiond executes action when specific event occurs.**
   - ✓ **snmpCollect collects MIB data and monitors thresholds.**

   Use $OV_BIN/ovstart to start them if they're not already running.

Start NNM (cont.)
Sample Output of ovstatus

```
object manager name: ovwdb
behavior:          OVs_WELL_BEHAVED
state:             RUNNING
PID:               174
last message:      Initialization complete.
exit status:       -

object manager name: snmpCollect
behavior:          OVs_WELL_BEHAVED
state:             RUNNING
PID:               187
last message:      Initialization complete.
exit status:       -

object manager name: ovtopmd
behavior:          OVs_WELL_BEHAVED
```

Start an NNM Session (cont.)

2. **Start an X-Windows Session if it hasn't already started:**

x11start

3. **Start the Network Node Manager:**

$OV_BIN/ovw &

End an NNM Session

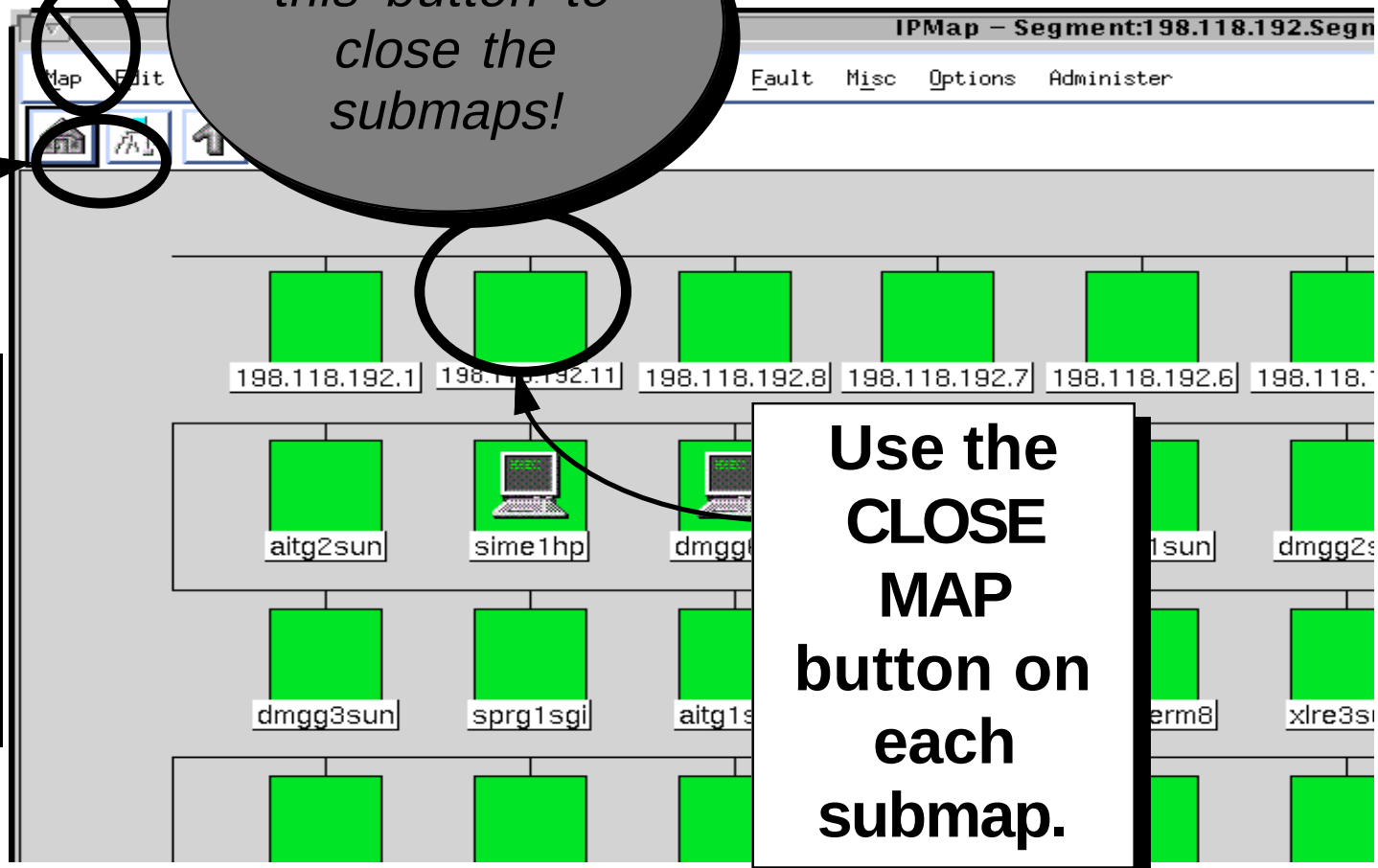

Do NOT use this button to close the submaps!

Select MAP; then select EXIT

Use the CLOSE MAP button on each submap.

Maps and Submaps

- **MAP**
  - A set of related objects, symbols, and submaps
  - A collection of submaps
  - Represents topology and state or real-world network
- **SUBMAP**
  - A collection of related symbols
  - Represents a view of the network
  - Part of the heirarchical structure

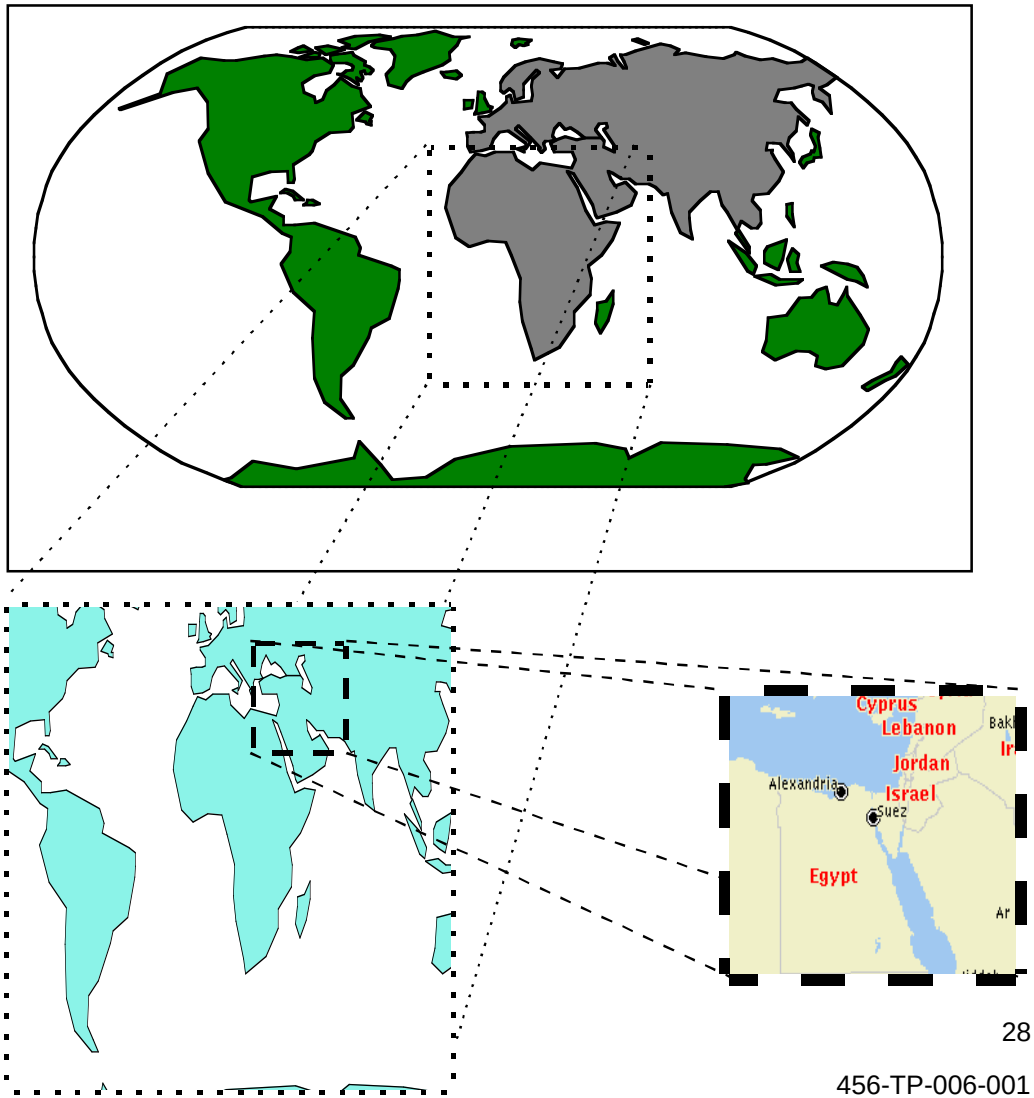

Submap Levels

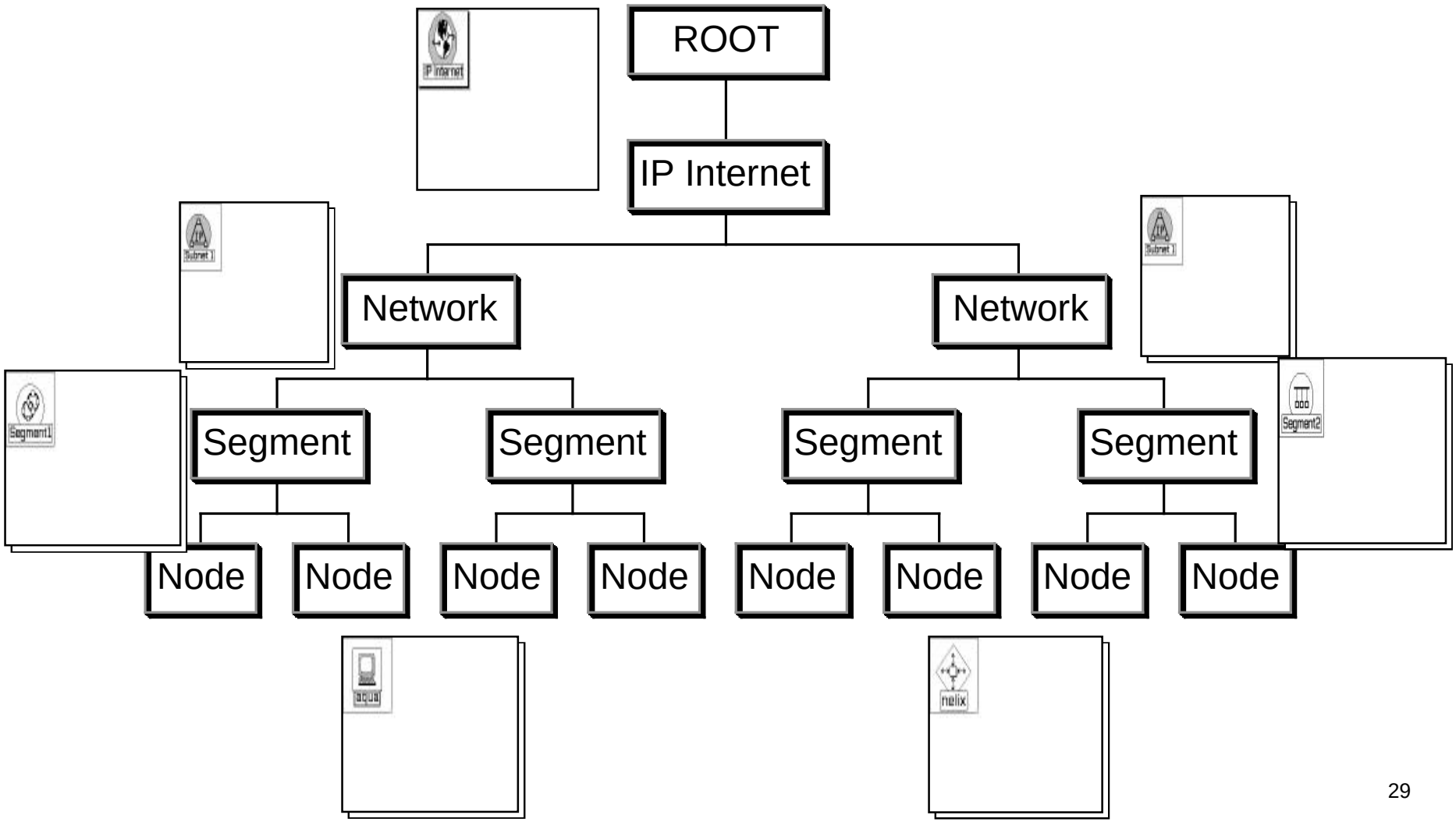

Areas of a Submap

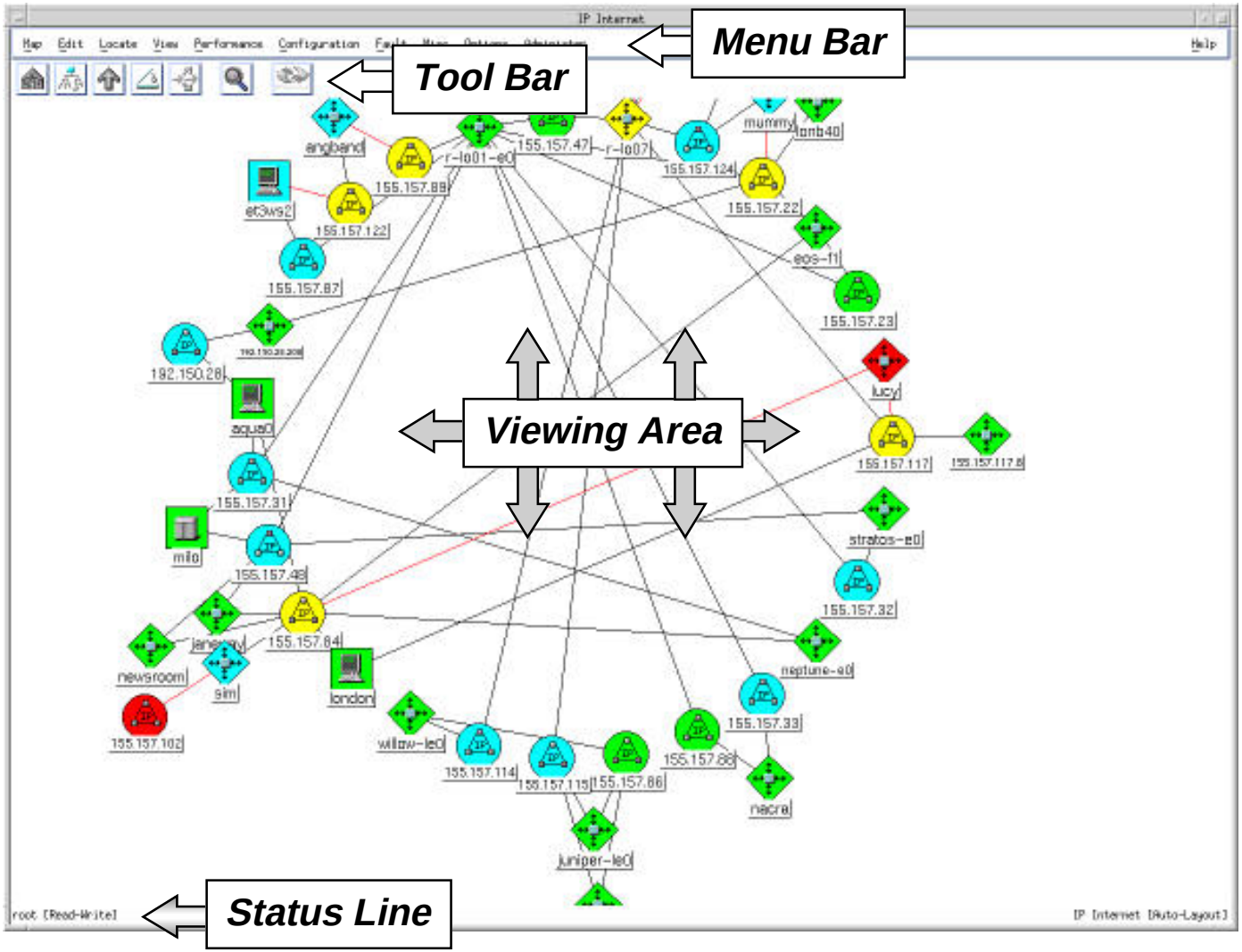

HPOV Button Bar Buttons Defined

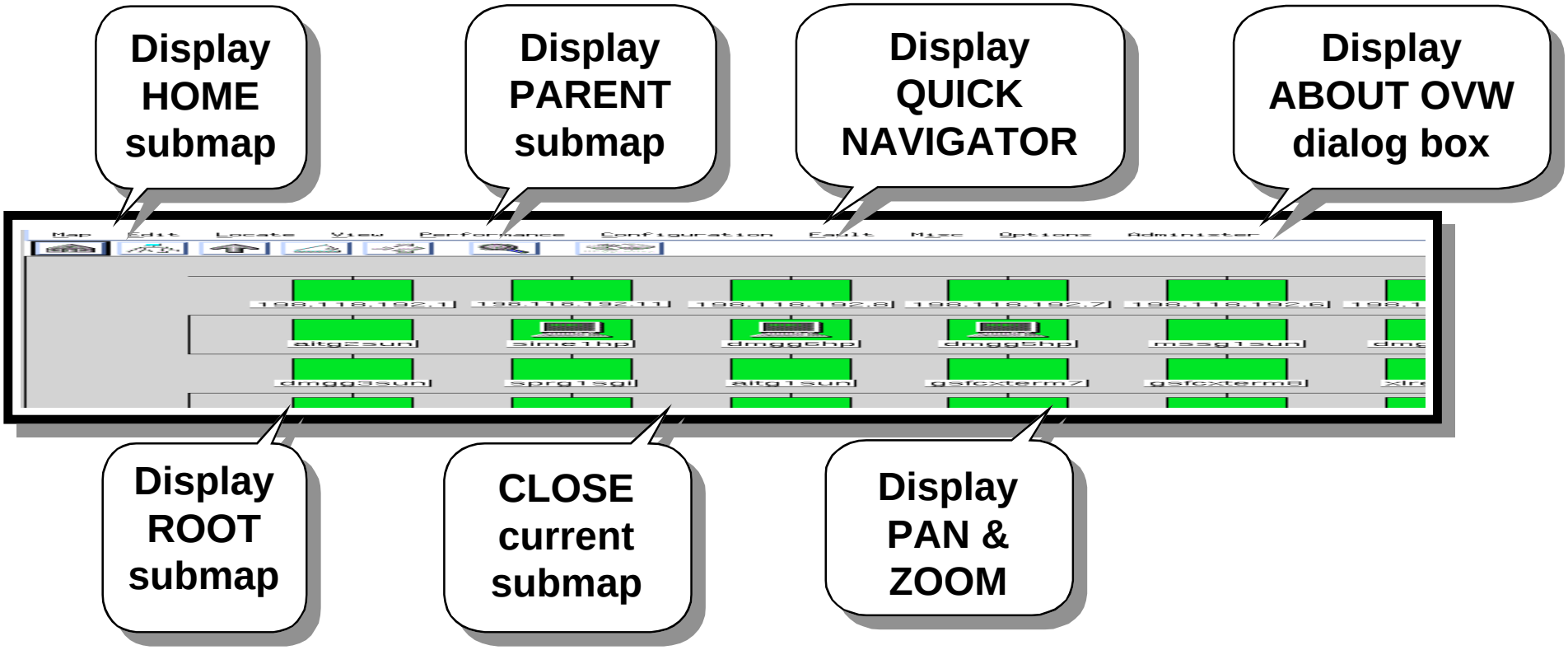

HPOV Symbols Defined

Router, Hub, Gateway

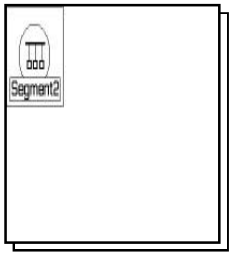

Network Segments
(bus and FDDI ring topologies)

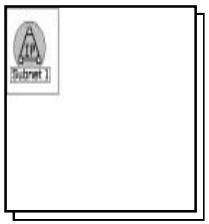

Subnetwork

Root

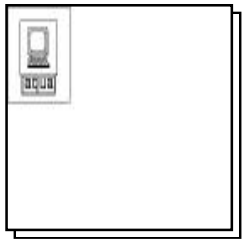

Workstation

Geographic Location

Objects and Symbols

- **OBJECT - a logical or physical entity or resource**
  - Another network
  - LAN segment
  - Ethernet cable or RS-232 line
  - Software application or process running on another computer
  - Logical IP connection to a network
  - Workstation

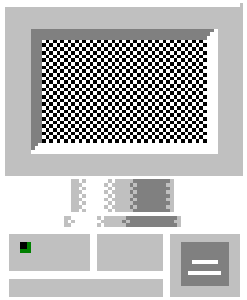

- **SYMBOL**

  graphical representation of an object on the submap

Object Palette

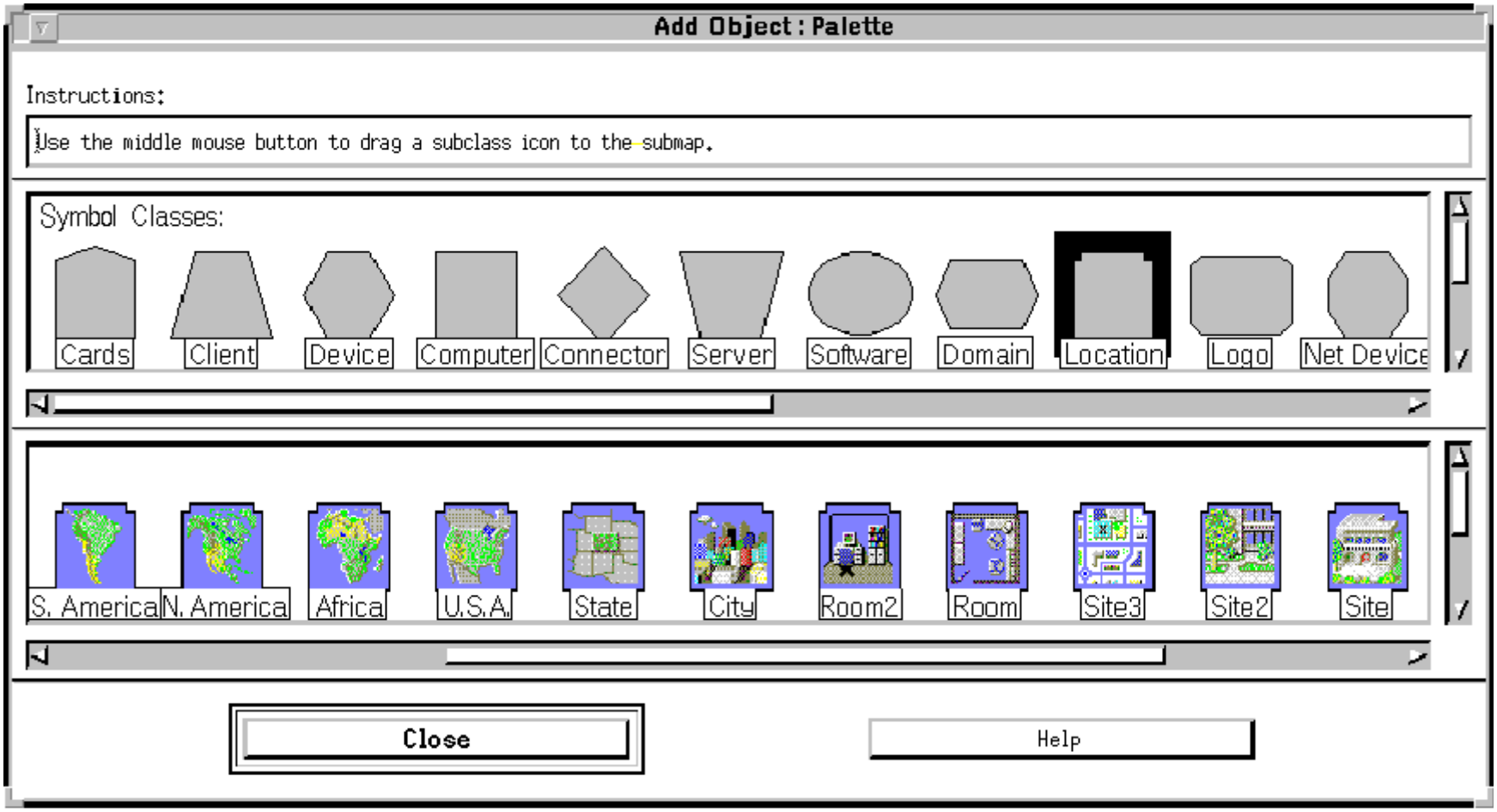

Segment Defined

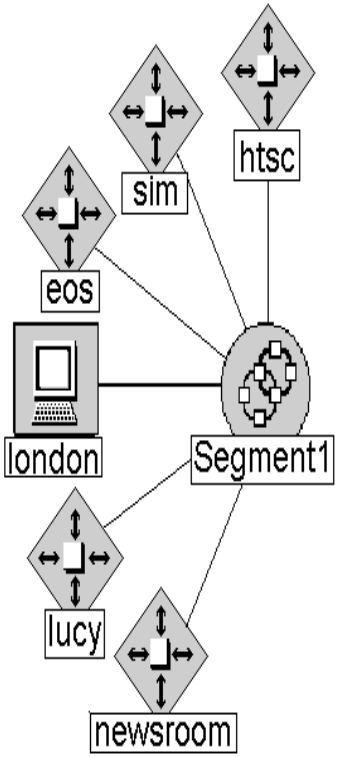

A group of data communication objects interconnected by a common transmission medium.

Segment Defined (cont.)

- ***SEGMENT SUBMAP*** **represents the physical topology of a segment of the network at the level of nodes and connectors.**

- **If possible, NNM maps a segment to the appropriate node submap. Otherwise maps the segment to default segment submap.**

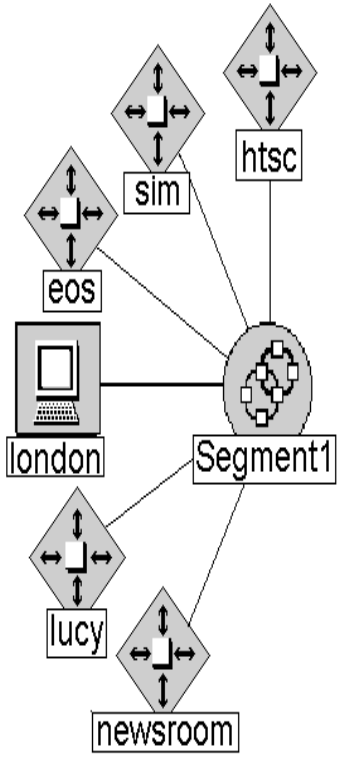

Add IP Interface Object Screen

Add Object -- Set Attributes

IP Address:

Subnet Mask:

255.255.255.0

Messages:

Enter an IP address, then press Verify

OK Verify Cancel Help

Object Description Dialog Box

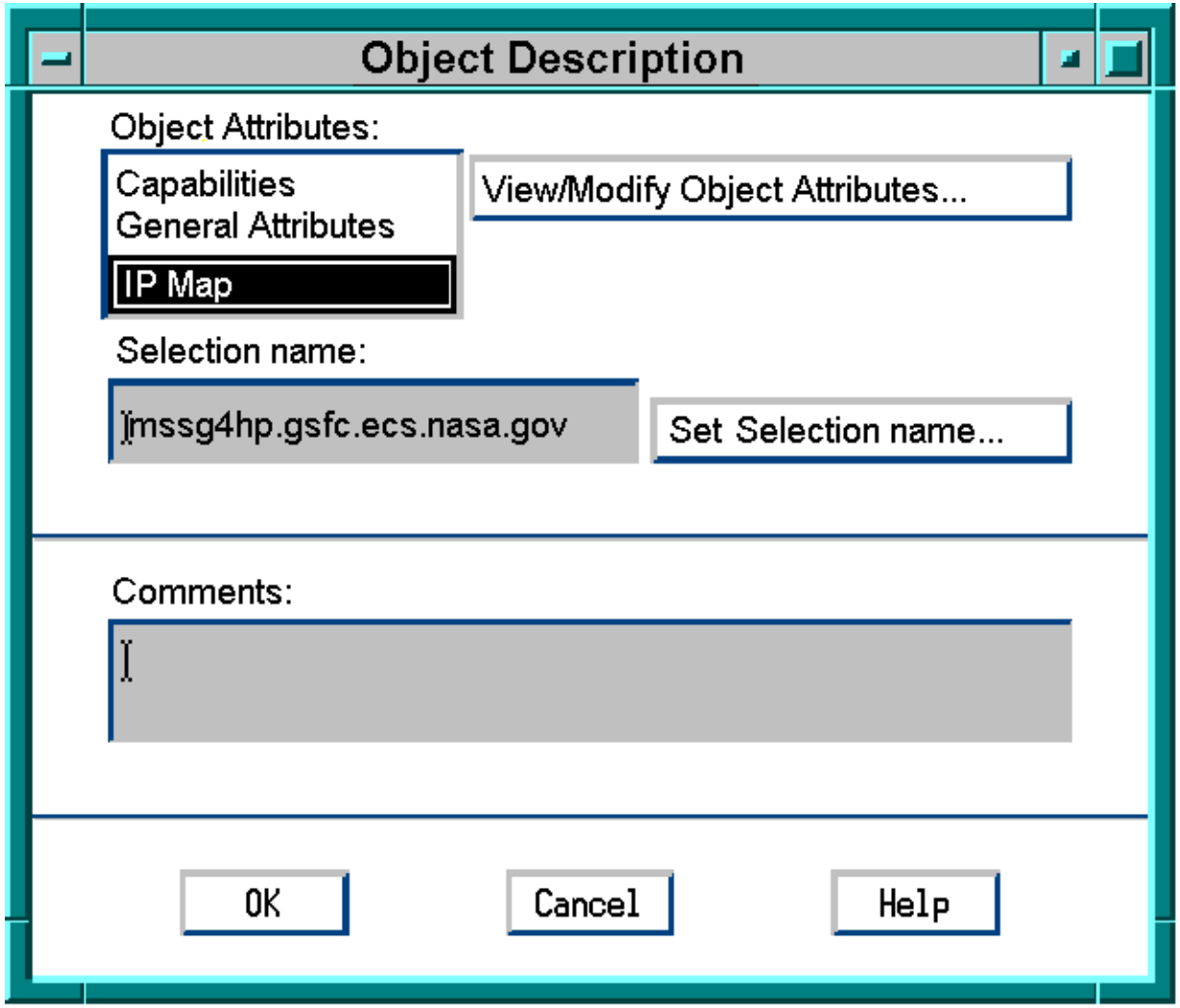

Object Attributes Dialog Box

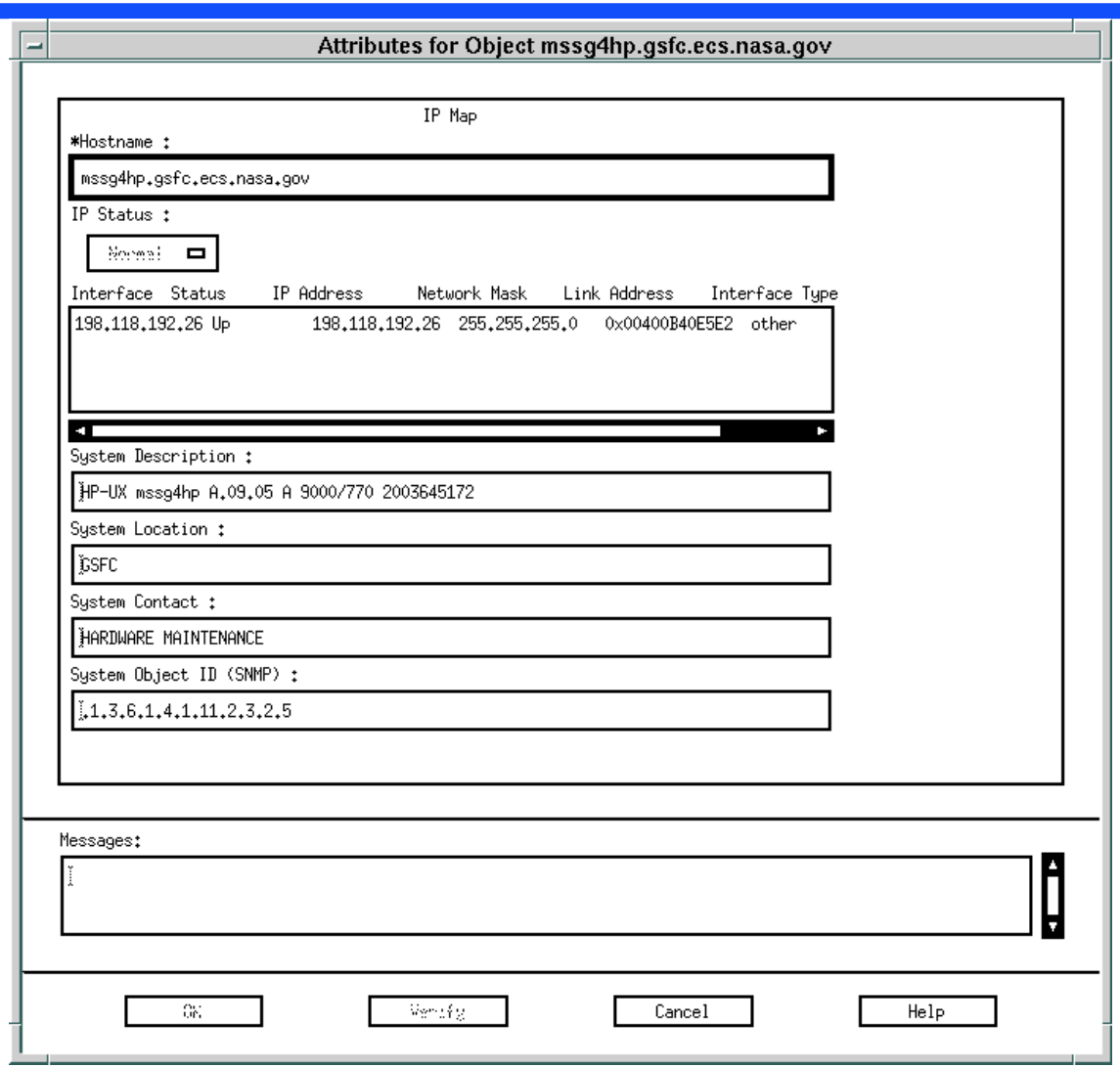

Viewing Network Address Information

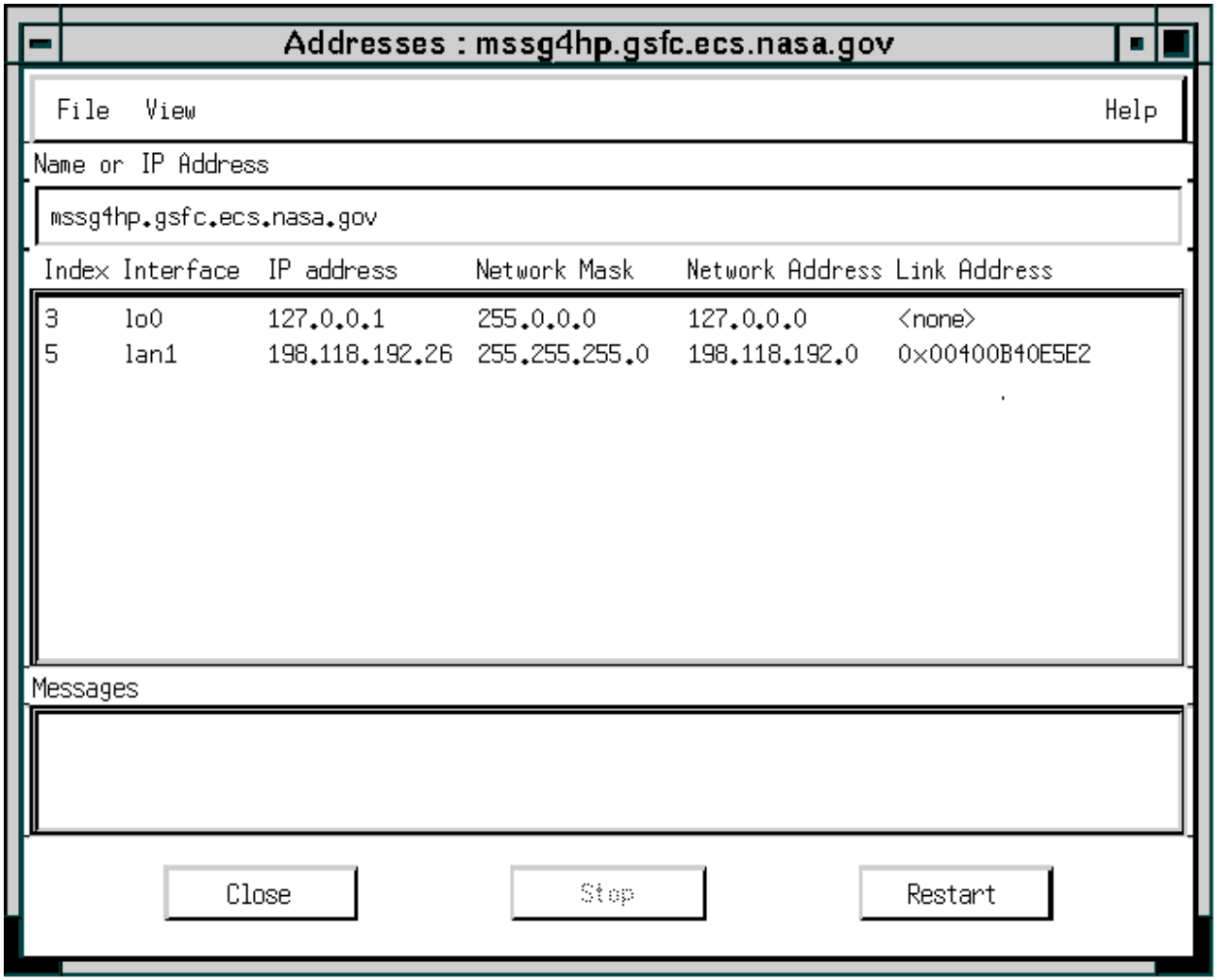

Routing Traffic Through the Network

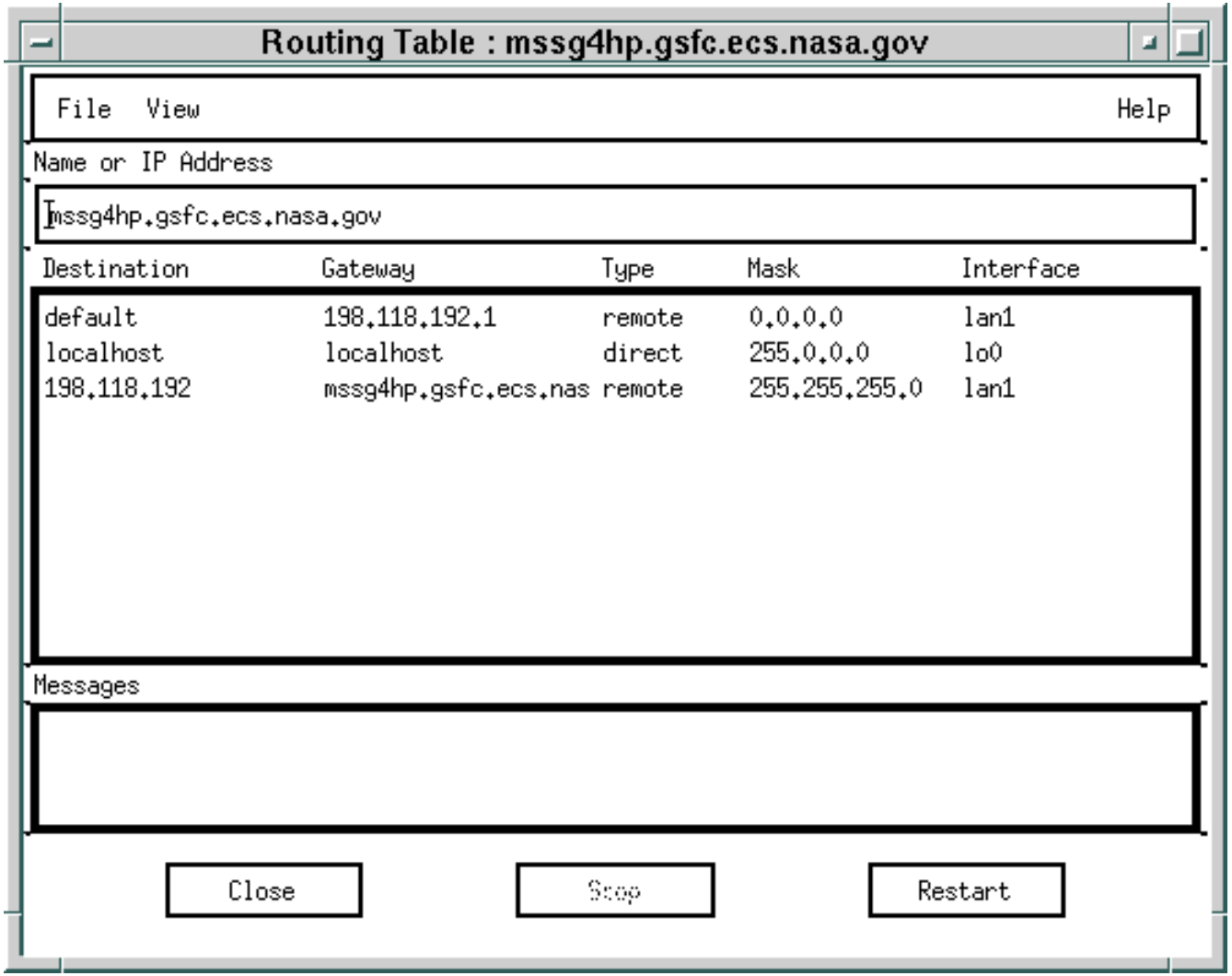

Viewing Services Available on a Node

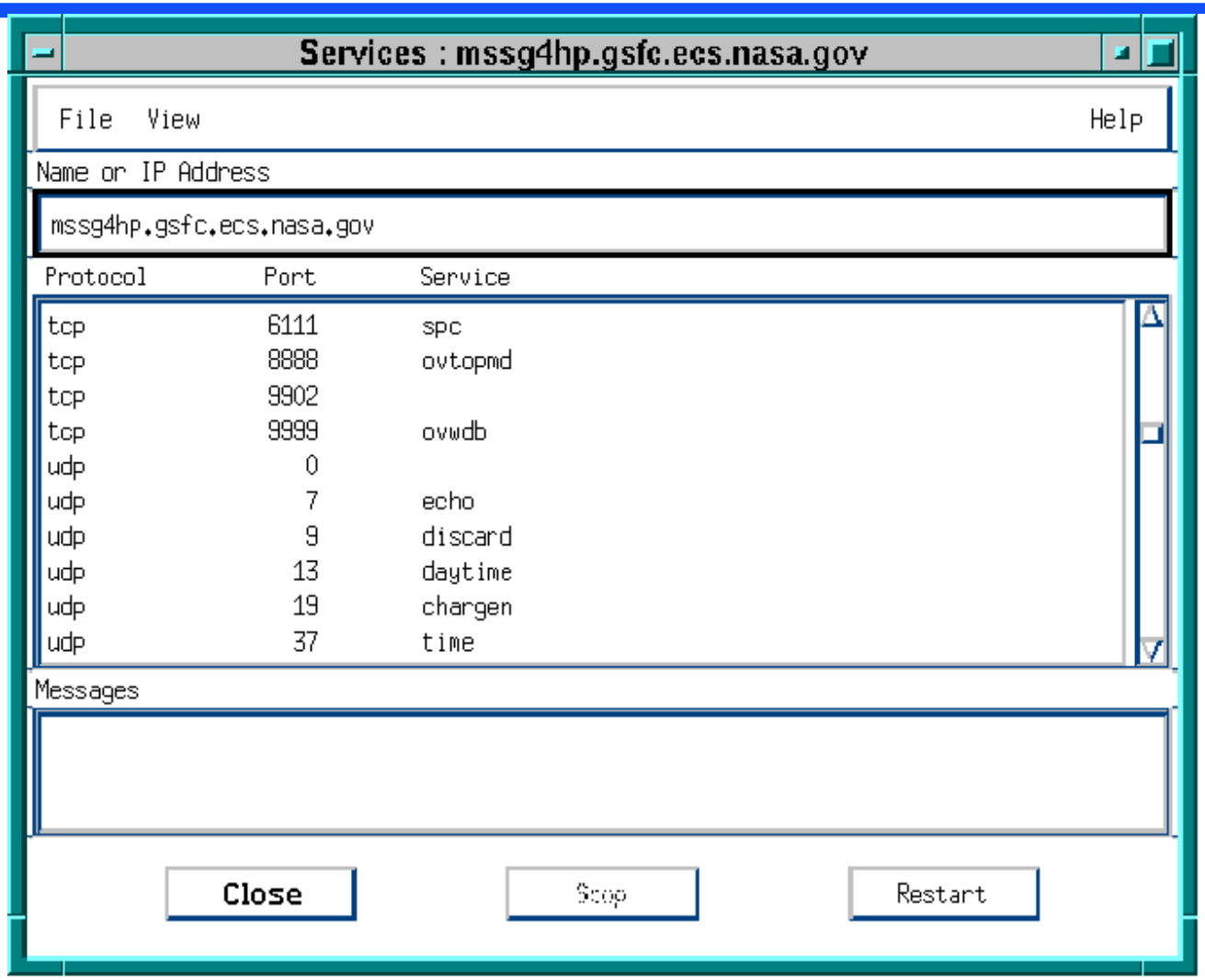

Symbol Status States & Colors

- **OPERATIONAL STATUS**

  Blue = unknown

  Green = normal

  Cyan = warning

  Yellow = minor/marginal

  Orange = major

  Red = critical

- **ADMINISTRATIVE STATUS**

  Off-white = unmanaged or unmonitored

  Salmon = testing

  Tan = restricted

  Dark Brown = disabled

Administrative Colors & States

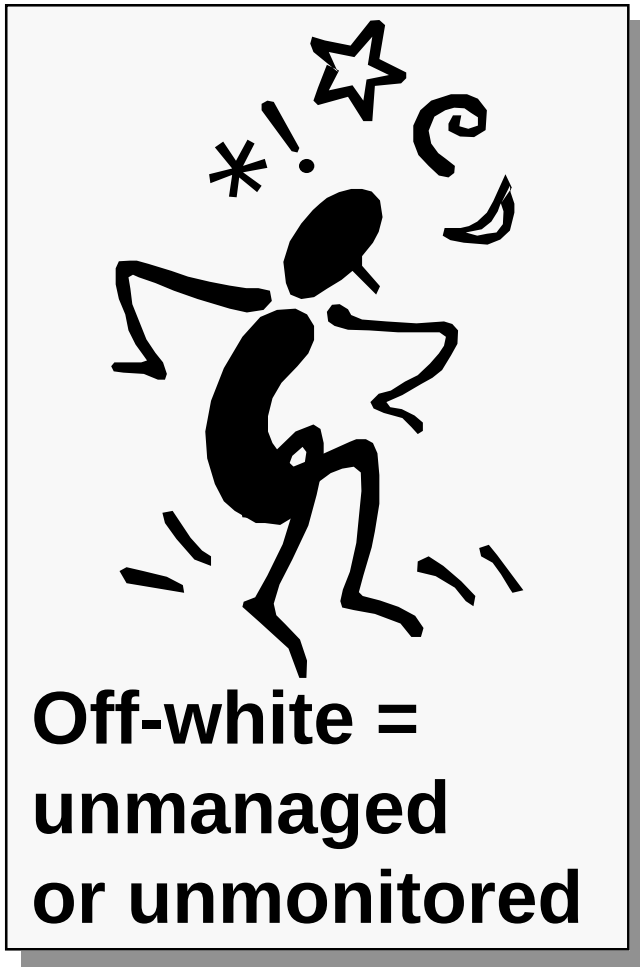

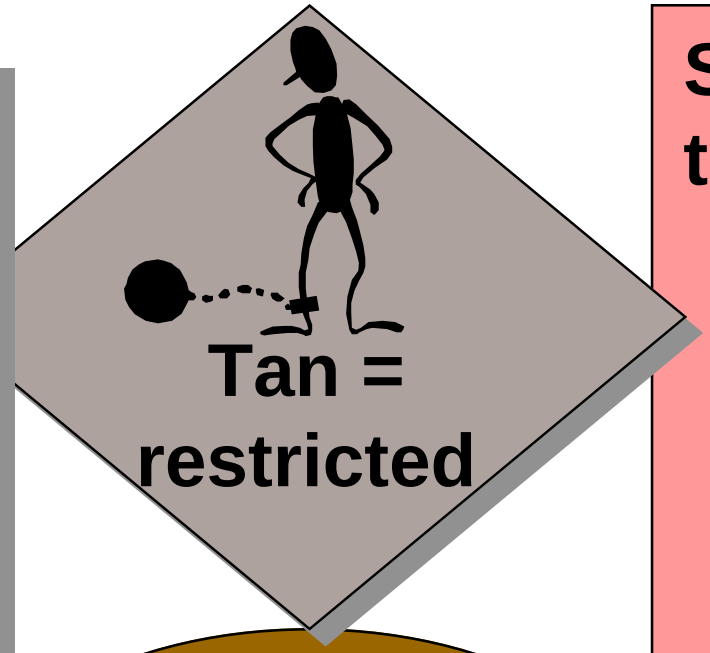

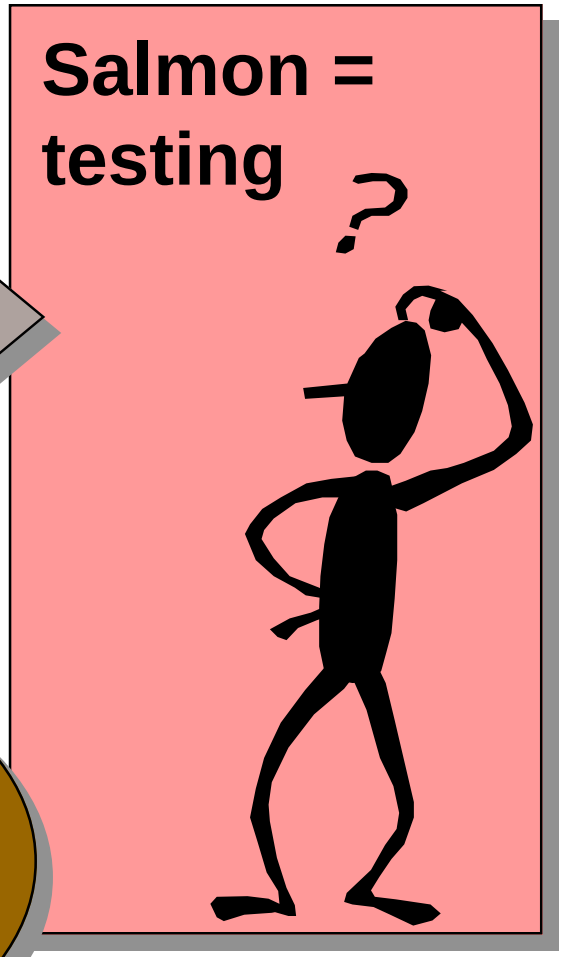

Event Browser Window

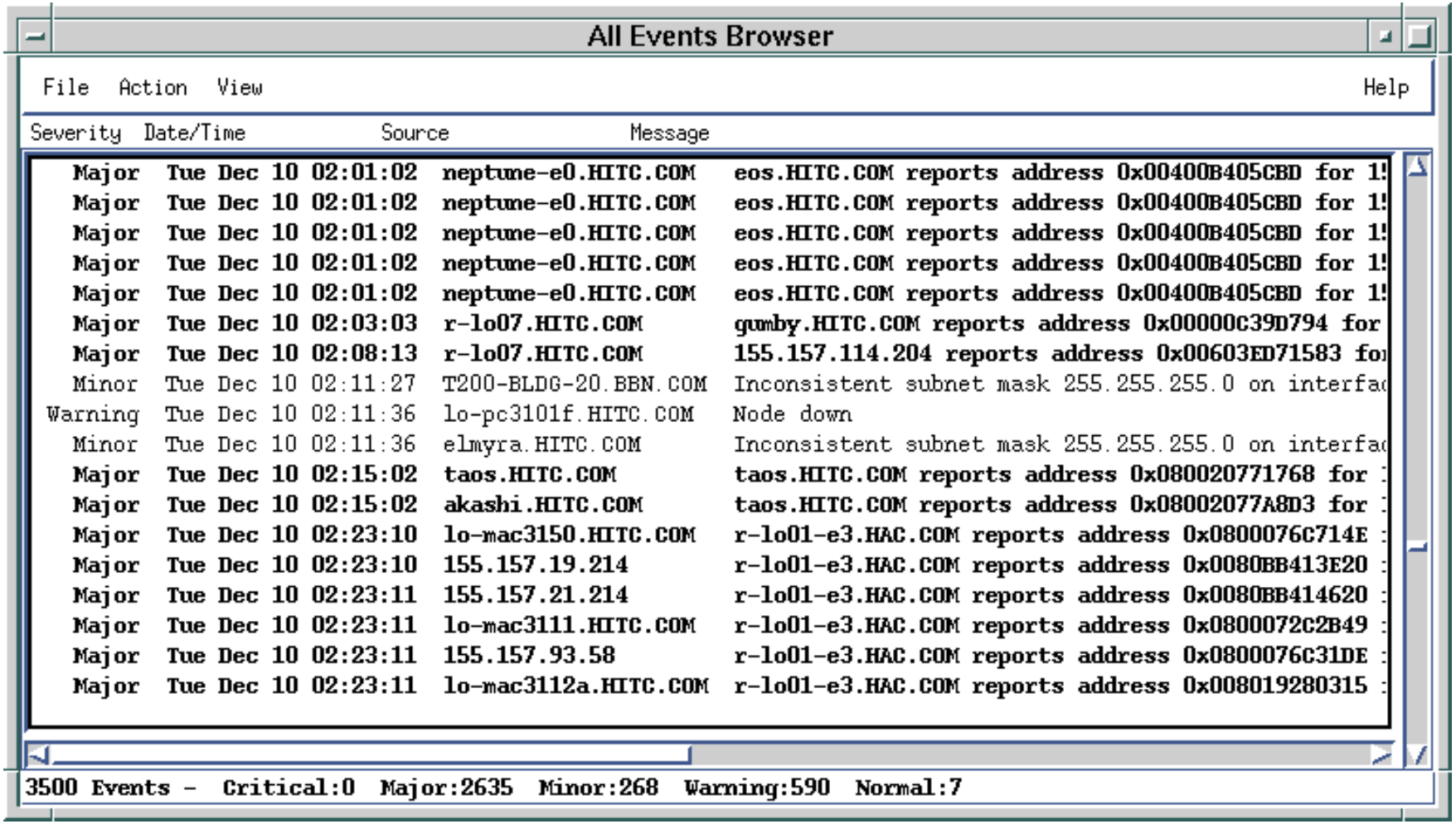

HP OpenView
Event Categories Window

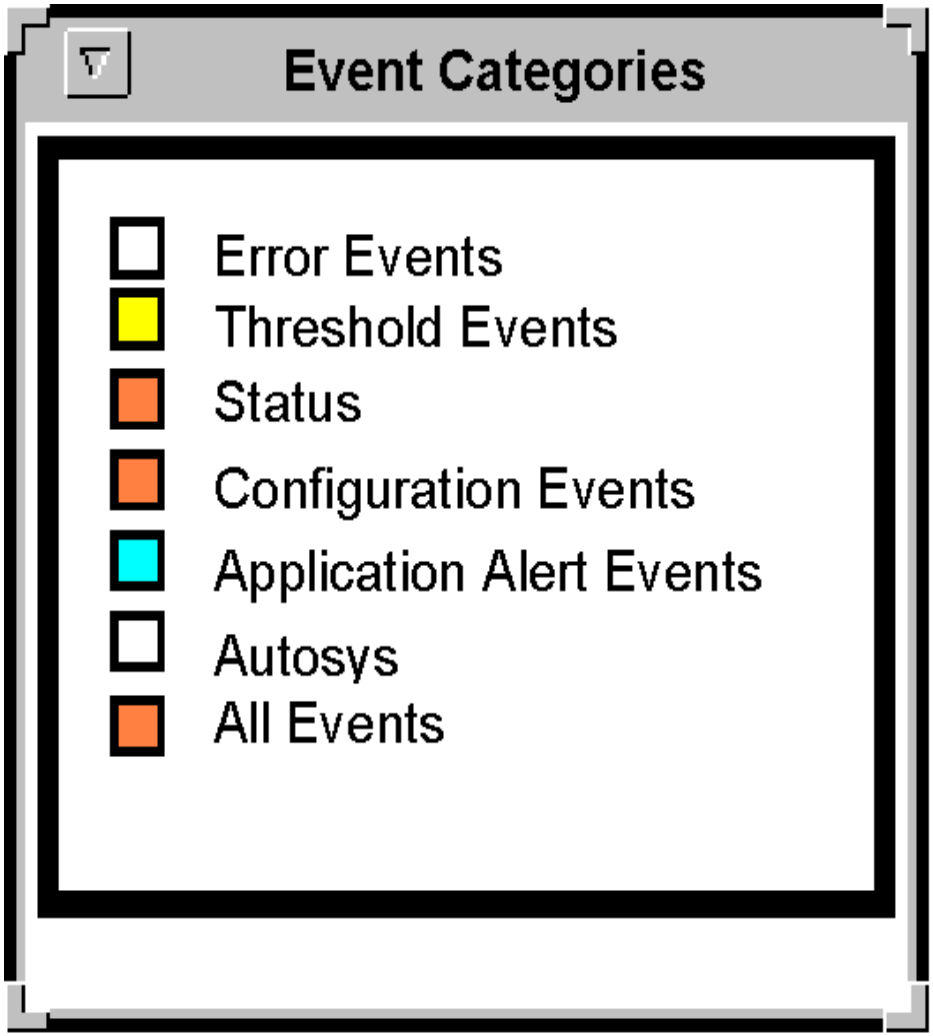

Threshold Event Warning Screen

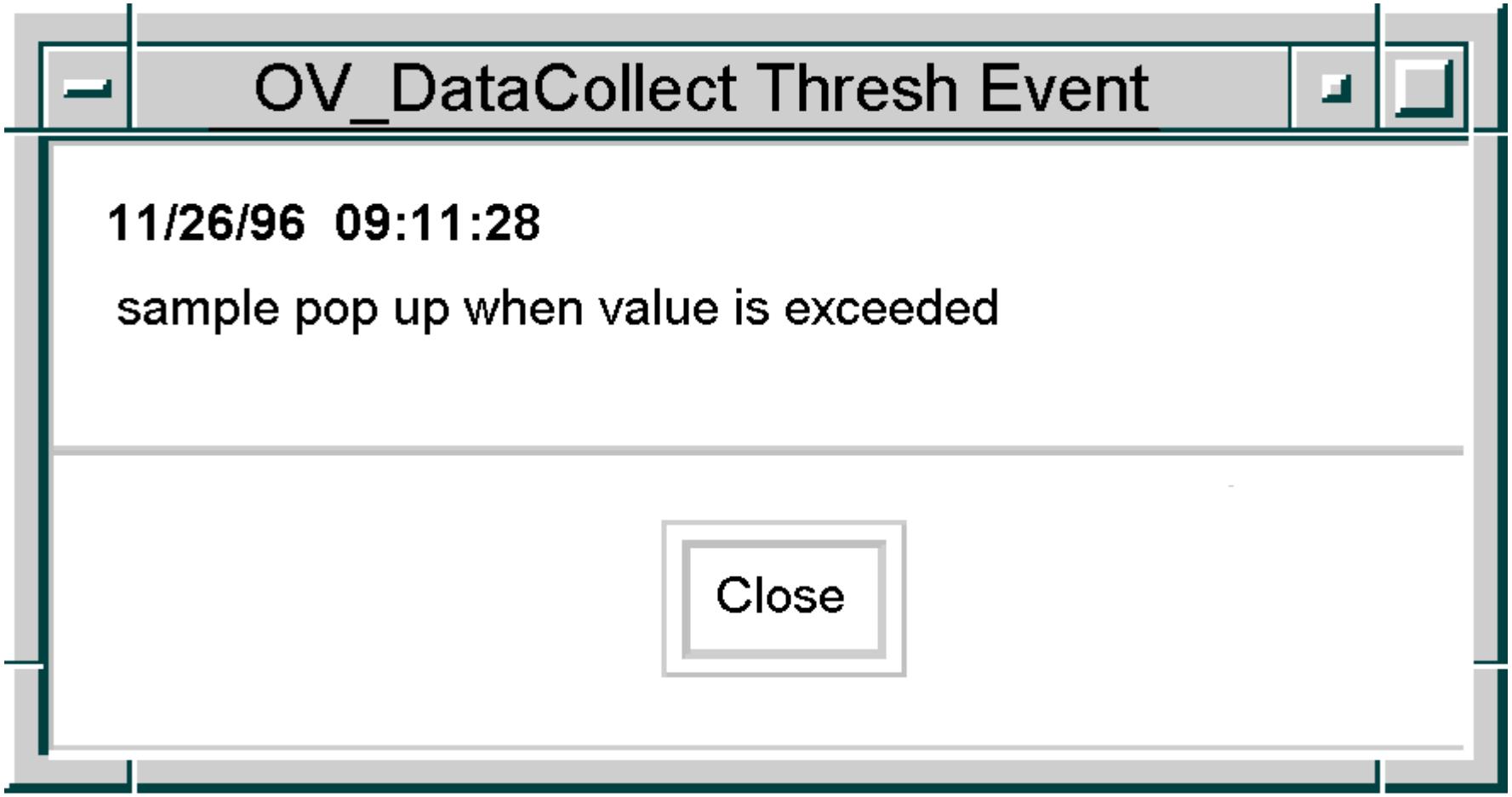

HP OpenView
Interface Traffic Monitor

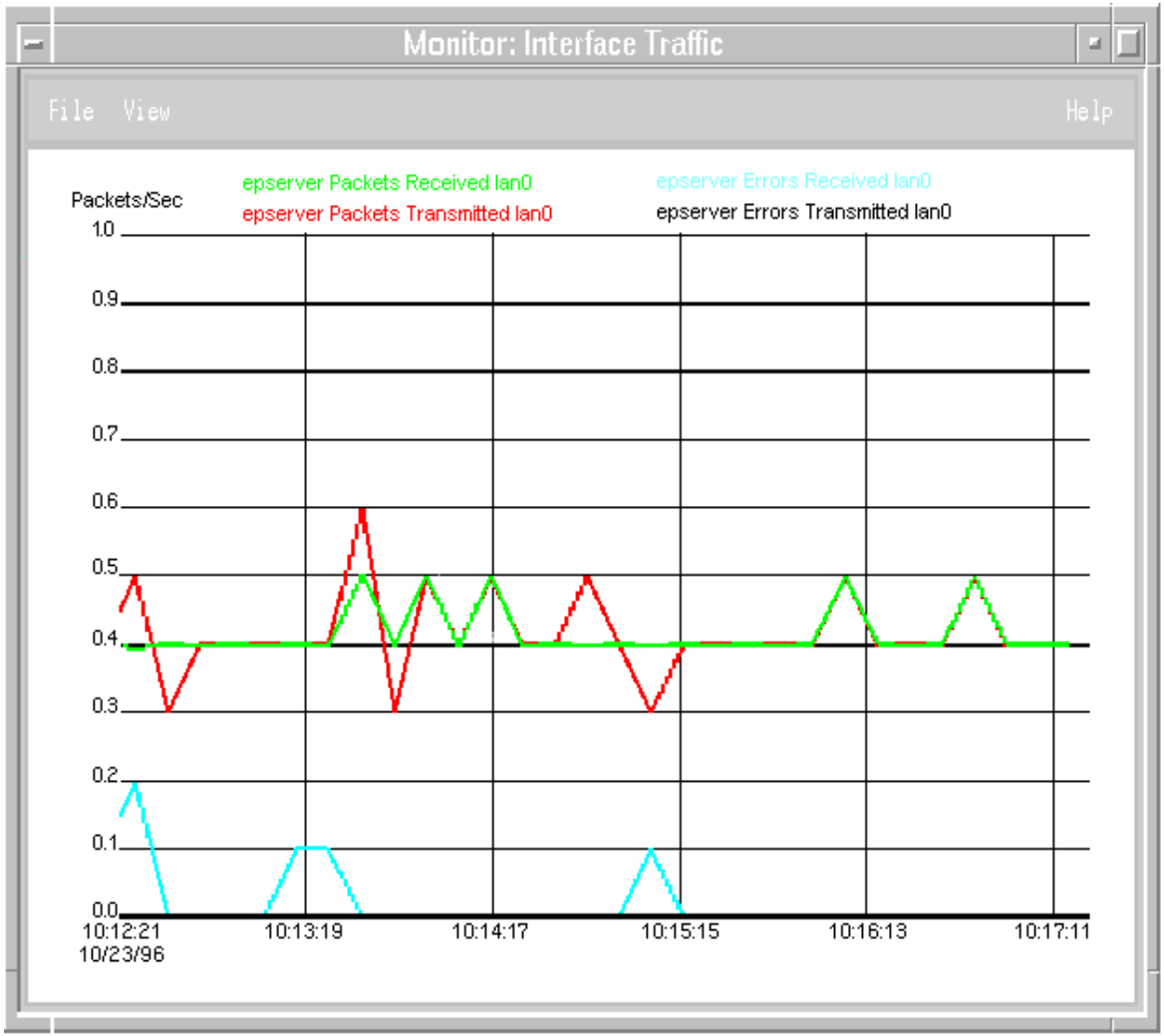

LaRC Network Security Summary

	EBNet	User Community	M&O Network
FROM	• No rlogin, telnet to hosts, NFS, NIS, X-11 • Allow telnet from Testbed SMC to Testbed FDDI • All other traffic passes	• No rlogin, telnet, NFS, NIS, X-11 • All other traffic passes	• No rlogin, telnet, NIS • X-11 allowed only from local Testbed • All other traffic passes
TO	• Allow all traffic	• All traffic passes	• No rlogin, telnet, NIS • X-11 allowed only from local Testbed • All other traffic passes

EDC & NSIDC
Network Security Summary

	EBNet	User Community	M&O Network
FROM	• No rlogin, telnet to hosts, NFS, NIS, X-11 • Allow telnet from Testbed SMC to Testbed FDDI • All other traffic passes	• No rlogin, telnet, NFS, NIS, X-11 • All other traffic passes	• No rlogin, telnet, NIS • X-11 allowed only from local Testbed • All other traffic passes
TO	• Allow all traffic	• All traffic passes	• No rlogin, telnet, NIS • X-11 allowed only from local Testbed • All other traffic passes