INTRODUCTION AND SYSTEM OVERVIEW

ECS Pre-Release B Testbed Training

Overview of Lesson

- Introduction
- ECS Overview
- Pre-Release B Testbed
- System Functional Overview
- Operational Software Configuration Overview
- Operation Hardware Configuration Overview
- Commercial Off-the-Shelf (COTS) Software Overview
- Operational Processes

Overview of Lesson (Cont.)

- **Practical Exercises**
  - **Tour of the facility**
  - **Performing an operator login and logout**

Objectives

- **OVERALL:**
  - **Describe the mission, goals, objectives, structure, functions, products, services and users of ECS**
- **SPECIFIC:**
  - **Describe the mission of ECS**
  - **Describe the ECS Pre-Release B Testbed support for Science Software Integration and Test (SSI&T) of…**
    - » **EOS AM-1**
    - » **Landsat-7**
  - **Describe how the ECS functions in terms of:**
    - » **general data flow**
    - » **ECS operations centers/locations**

Objectives (Cont.)

- Describe the ECS operational software configuration of:
  - » Science Data Processing Subsystem (SDPS)
  - » Communications and System Management Subsystem (CSMS)
- Describe the ECS operation hardware configuration
- Describe commercial off-the-shelf (COTS) software
- Describe ECS operational processes
- Describe ECS facility layout and the locations of ECS components within the facility
- Log in to ECS
- Log out of ECS

Objectives (Cont.)

- **STANDARD: Describe specified characteristics of ECS without error in accordance with the lesson content.**

- **Lesson provides general familiarity with ECS and gives those who will be ECS operators and support staff a context and basis for subsequent lessons on specific aspects of the system**

ECS Overview - Mission

- **Mission to Planet Earth (MTPE)**
  - **NASA research mission**
  - **space-, ground-, and aircraft-based measurements to study the processes leading to global climate changes and develop a predictive capability for earth systems on time scales of decades to centuries**
  - **NASA's contribution to the U.S. Global Change Research Program (USGCRP)**
  - **goal:**
    - » **advance scientific understanding of the entire Earth system by developing a deeper comprehension of the components of the system and the interactions among components**

ECS Overview - Mission (Cont.)

- **Earth Observing System (EOS)**
  - **principal element of MTPE**
  - **designed to collect Earth Science data**
  - **emphasis on long-term, sustained data sets from carefully calibrated instruments on satellites in low-Earth orbits**
  - **goal:**
    - » **provide quantitative data from systematic, continuous satellite observations from low-Earth orbit for a minimum of 15 years**

ECS Overview - Mission (Cont.)

- **Earth Observing System (EOS)**
  - **broad objectives:**
    - » **create an integrated scientific observing system to study Earth's critical, life-enabling, interrelated processes**
    - » **develop a comprehensive data and information system**
    - » **acquire and assemble a global database of remote-sensing measurements from space as a key to understanding global climate change**
  - **major contribution to distinguishing between natural variability in the Earth system and changes introduced by human activities**

ECS Overview - Mission (Cont.): Major EOS Segments

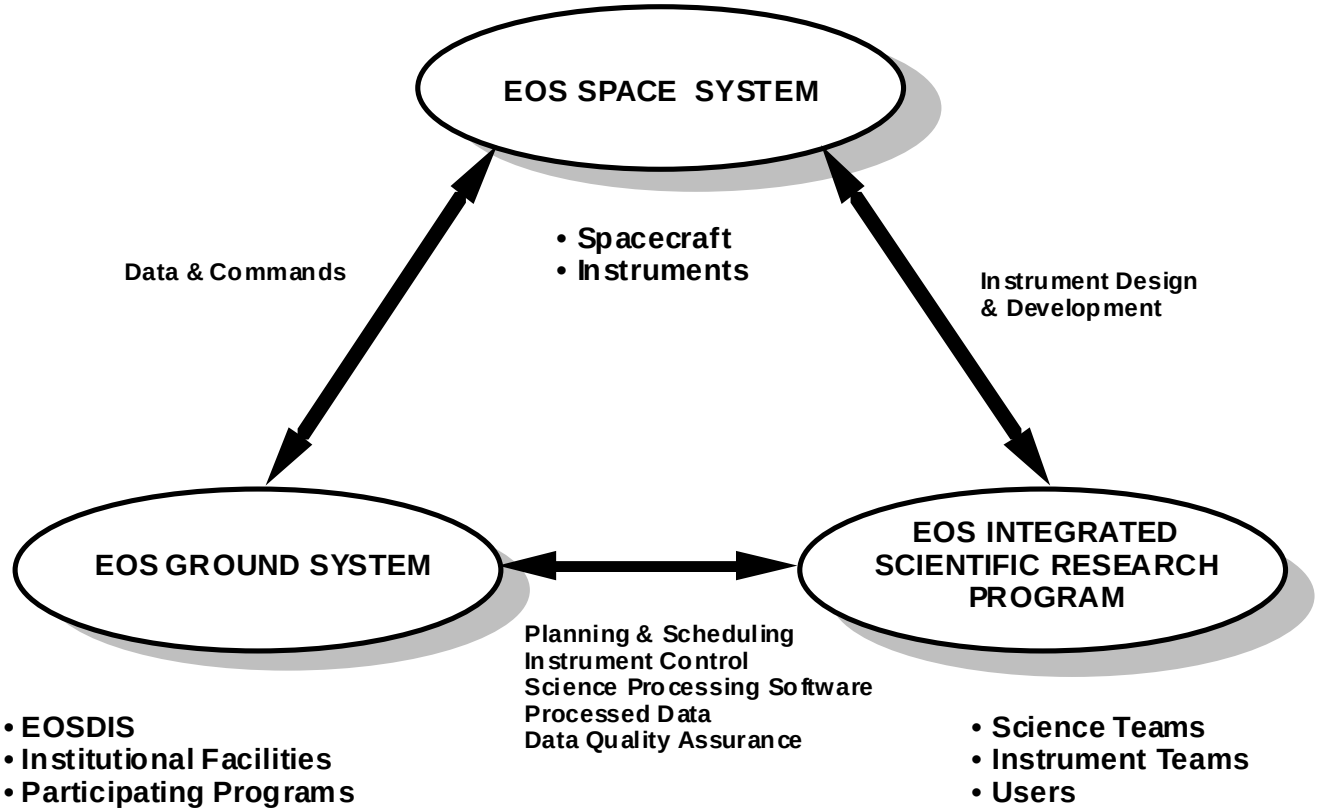

ECS Overview - Mission (Cont.):

- **Purpose of EOS program components**
  - **EOS Space System**
    - » **acquire essential global Earth science data on a long-term sustained basis and in a manner that maximizes the scientific utility of the data and simplifies data analysis**
  - **EOS Ground System (EGS)**
    - » **provide the Earth Science research community with easy, affordable, and reliable access to the full suite of Earth science data from U.S. and International Partner (IP) platforms**
  - **Integrated Scientific Research Program**
    - » **investigate processes in the Earth System and improve predictive models**

ECS Overview - Mission (Cont.)

- **EOS Data and Information System (EOSDIS)**
  - **NASA's overall Earth Science data system**
    - » **under the direction of the Earth Science Data and Information System (ESDIS) Project**
  - **ground system for the collection and analysis of science data on the dynamics of the Earth**
  - **supports the following activities:**
    - » **planning, scheduling and control of EOS spacecraft**
    - » **exchanging commands, data and algorithms with non-NASA entities involved in EOS**
    - » **coordinating activities with other data-gathering systems**
    - » **transforming observations into physical variables**
    - » **presenting data to science users, facilitating/ stimulating interactive scientific research**

ECS Overview - Mission (Cont.)

- **EOSDIS**
  - **Version 0 (V0) (initial version)**
    - » **manages data from NASA's current and past Earth Science research satellites and field measurement programs**
    - » **provides data archiving, distribution and information management services**
  - **EOS/ECS era**
    - » **satellite/instrument command and control**
    - » **generation of data sets into climate models**
    - » **migration of V0 data into ECS**

ECS Overview - Mission (Cont.)

- **EOSDIS Services**
  - **user support**
  - **data archive management and distribution**
  - **information management**
  - **product generation**
  - **spacecraft command and control**
  - **data capture and telemetry processing**

ECS Overview - Mission (Cont.)

- **EOSDIS data products**
  - **Level 0 - “raw” data**
  - **Level 1A - time-referenced, annotated**
  - **Level 1B - processed to sensor units**
  - **Level 2 - derived geophysical variables**
  - **Level 3 - variables mapped on space-time grid scales**
  - **Level 4 - model output or results from analyses of lower-level data**

Sample EOS Instruments and Measurements

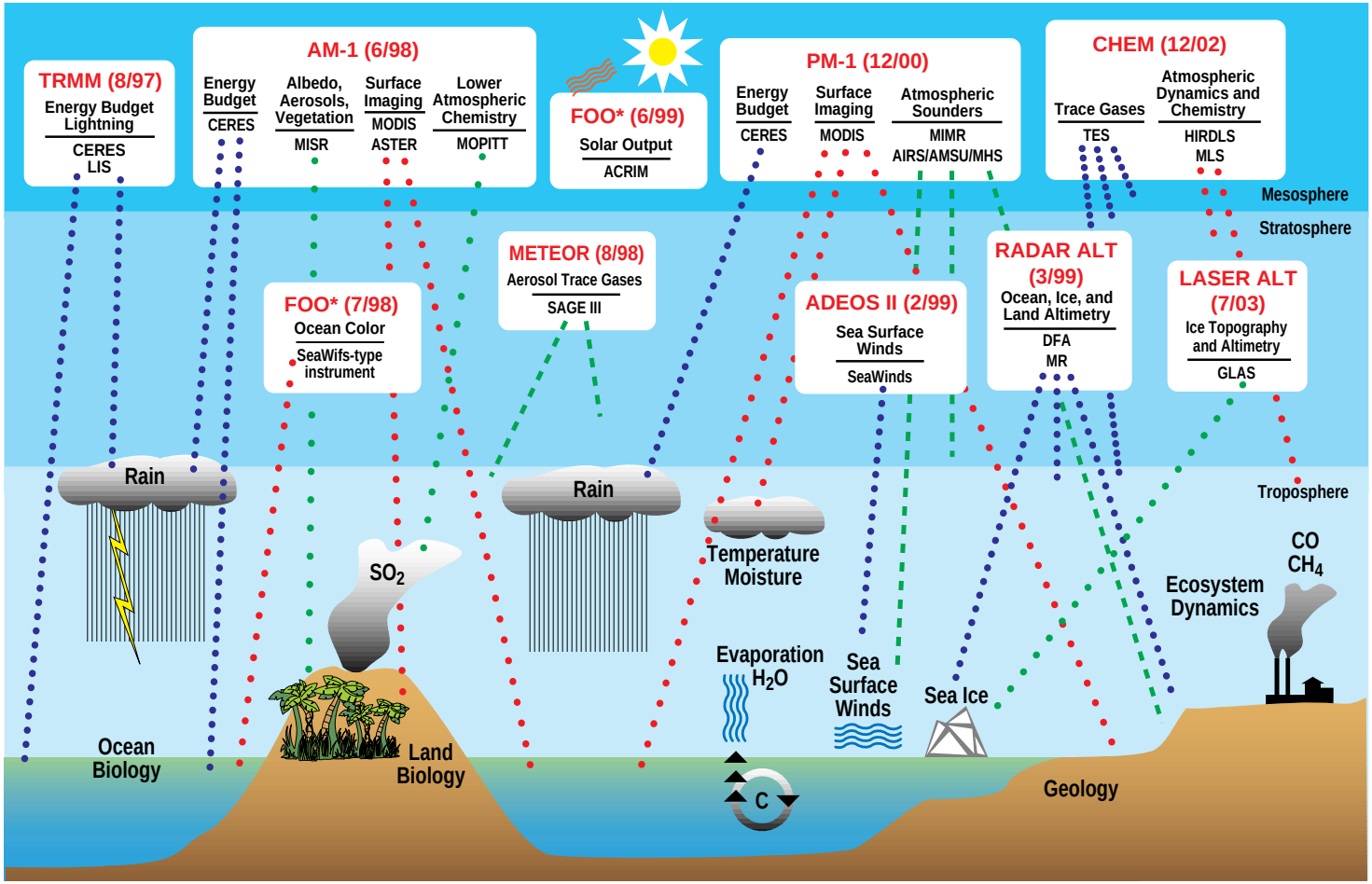

*FOO = Flight of Opportunity

ECS Overview - Mission (Cont.)

- **EOSDIS Components**
  - **EOS Data and Operations System (EDOS)**
    - » **spacecraft data capture and distribution**
  - **EOSDIS Backbone Network (EBnet)**
    - » **data communication services**
  - **EOSDIS Core System (ECS)**

EOSDIS Principal Components

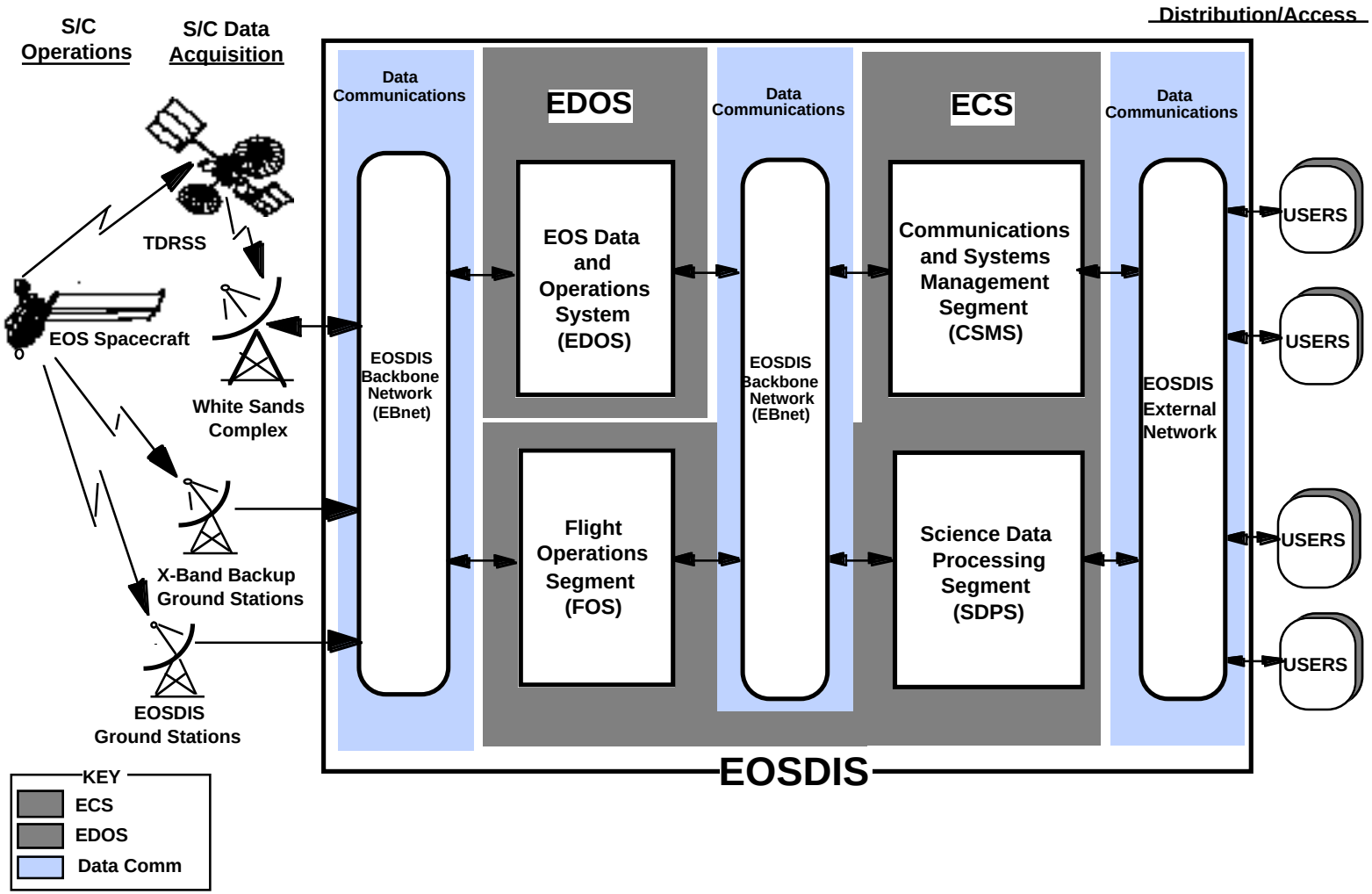

ECS Overview - Mission (Cont.)

- **EOSDIS Core System (ECS)**
  - **Major component of EOSDIS**
  - **Mission**
    - » **provide centralized mission and instrument command and control functions, and distributed (but common) product generation, archiving, and information management functions for the EOSDIS**
  - **Main Functions**
    - » **provide control of EOS spacecraft and instruments**
    - » **process data from EOS instruments**
    - » **manage and distribute EOS data products and other selected data sets to the scientific community**

Relationship of ECS to Global Change Research

WORLDWIDE
GLOBAL CHANGE RESEARCH

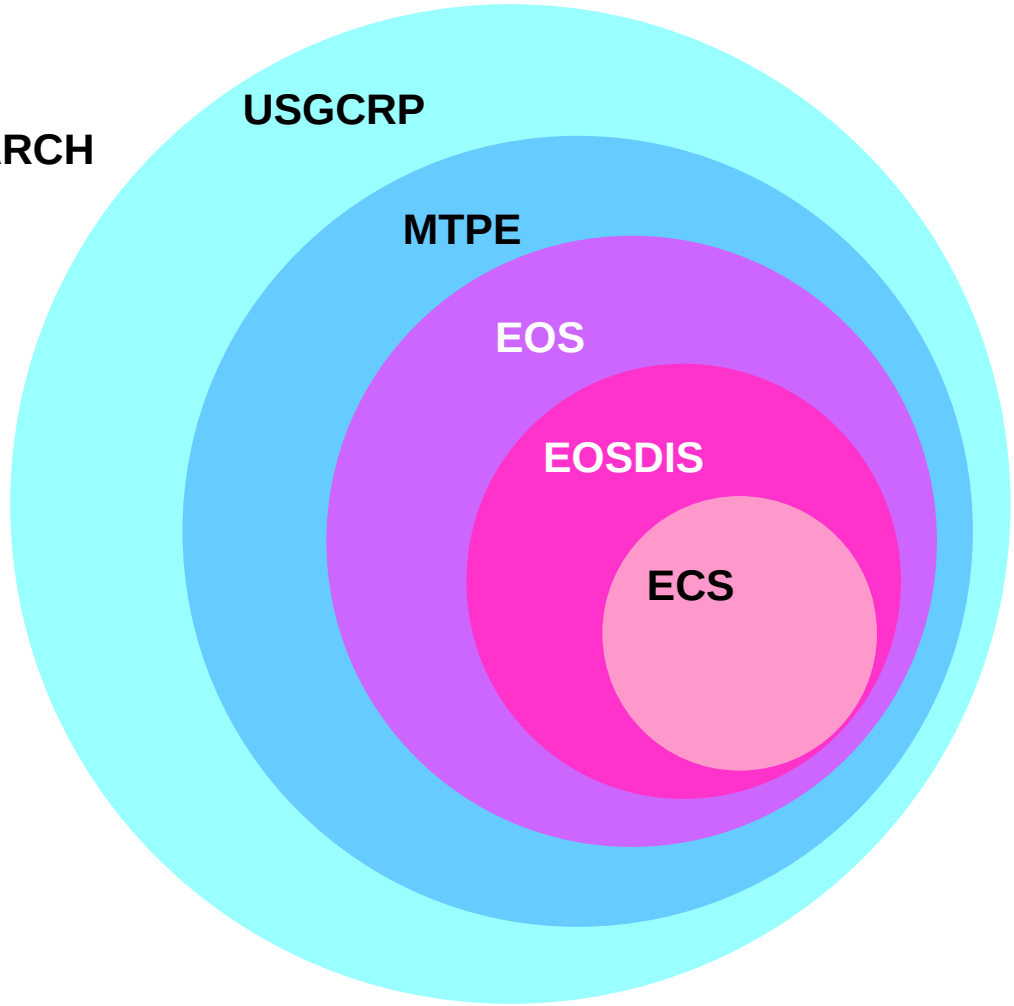

ECS Overview - Mission (Cont.)

- **ECS components/segments**
  - **Science Data Processing Segment (SDPS)**
  - **Communications and System Management Segment (CSMS)**
  - **Flight Operations Segment (FOS)**

ECS Overview - Mission (Cont.)

- **Science Data Processing Segment (SDPS)**
  - **Receives, processes, archives and manages all data from EOS and other NASA Probe flight missions**
  - **Provides support to users in accessing data and products**
  - **Promotes the utilization and exchange of data (advertising service)**
  - **Provides the infrastructure for the development, experimental usage and quality-checking of new Earth Science algorithms**
  - **Distributed system - located at Distributed Active Archive Centers (DAACs)**

ECS Overview - Mission (Cont.)

- **Communications and System Management Segment (CSMS)**
  - **Interconnects users and service providers**
  - **Transfers information among ECS and EOSDIS components**
  - **Monitors and coordinates EOSDIS components**
  - **Supports a wide range of status information, coordination, administration and maintenance services**
  - **CSMS subsystems**
    - » **Systems Management Subsystem (MSS)**
    - » **Communications Subsystem (CSS)**
    - » **Internetworking Subsystem (ISS)**

ECS Overview - Mission (Cont.)

- **Flight Operations Segment (FOS)**
  - **Manages and controls EOS spacecraft and instruments**
  - **Performs mission planning, scheduling, control, monitoring and analysis**
  - **Interacts with other NASA institutional facilities**
    - » **Flight Dynamics Facility (FDF)**
    - » **Network Control Center (NCC)/Space Network Control (SNC)**
  - **FOS elements**
    - » **EOS Operations Center (EOC)**
    - » **Instrument Support Terminal (IST)**

Pre-Release B Testbed

- ECS development proceeds in phases
  - Interim Release 1 (Ir1)
    - » preliminary release for concept validation and testing (January 1996)
  - Pre-Release B Testbed
    - » deployed in May-June 1997 at four DAACs
    - » supports science software integration and test (SSI&T) in support of Instrument Teams (ITs) for Landsat-7 and EOS AM-1 missions
    - » based on the canceled Release A
  - Releases B, C and D
    - » support for future EOS missions, such as EOS AM-1 and EOS PM-1

Pre-Release B Testbed (Cont.)

- **Testbed support of SSI&T**
  - **starts with the delivery of science software to the DAACs**
  - **continues until either….**
    - » **successful integration of all expected science software packages into the ECS Pre-Release B Testbed**
    - » **scheduled end date for SSI&T support (September 1, 1997)**
  - **performed at the following DAACs:**
    - » **Goddard Space Flight Center (GSFC)**
    - » **Langley Research Center (LaRC)**
    - » **Earth Resources Observation Systems (EROS) Data Center (EDC)**
    - » **National Snow and Ice Data Center (NSIDC)**

Pre-Release B Testbed (Cont.)

- **SSI&T support for the following instruments:**
  - **EOS AM-1 satellite**
    - » **Advanced Spaceborne Thermal Emission and Reflection Radiometer (ASTER)**
    - » **Clouds and the Earth's Radiant Energy System (CERES)**
    - » **Multi-angle Imaging SpectroRadiometer (MISR)**
    - » **Moderate-Resolution Imaging Spectroradiometer (MODIS)**
    - » **Measurements of Pollution in the Troposphere (MOPITT)**
  - **Landsat-7 satellite**
    - » **Enhanced Thematic Mapper Plus (ETM+)**
  - **Meteor 3M-1 satellite**
    - » **Stratospheric Aerosol and Gas Experiment (SAGE) III**

Pre-Release B Testbed (Cont.)

- **Science software is developed independently of ECS by Instrument Teams at their local Science Computing Facilities (SCFs)**
  - **science software may be developed on a variety of computer platforms using many versions of compilers and operating systems**
  - **SSI&T is the process by which IT science software is tested and integrated into the ECS at the DAACs**

Pre-Release B Testbed (Cont.)

- **SSI&T goals**
  - **Ensure that the delivered PGEs conform to ESDIS Project standards**
  - **Load the PGEs on DAAC computers**
  - **Integrate the PGEs with the DAAC version of the SDP Toolkit and execute them using the ECS Planning and Data Processing Subsystem**
  - **Verify that the data products and results are the same as those produced at the SCFs**

Pre-Release B Testbed (Cont.)

- **Release B**
  - **first operational release of the ECS**
  - **to be delivered in two phases:**
    - » **Release B.0 scheduled completion December 30, 1997**
    - » **Release B.1 delivery September 1, 1998.**
- **Release B.0**
  - **consists of all functions critical to mission success at launch and for initial science activities related to support of the AM-1 and Landsat-7 satellites and their instruments**
- **Release B.1**
  - **provides all remaining Release B functions**

Pre-Release B Testbed (Cont.)

- **Release B.0 mission objectives:**
  - **Support AM-1 operations**
  - **Support Landsat-7 operations**
  - **Perform science data processing**
- **Release B.1 mission objectives**
  - **same objectives as Release B.0 plus the following additional objective:**
    - » **Support Advanced Earth Observing Satellite (ADEOS) II operations**

System Functional Overview

- **EOSDIS Data Flow**
  - **ECS components and other EOSDIS (non-ECS) components support the following types of services:**
    - » **data product generation**
    - » **archive**
    - » **distribution**
    - » **information management**
    - » **spacecraft/instrument command and control**
  - **internal interfaces**
    - » **DAACs**
    - » **System Monitoring and Coordination functions**
    - » **EOS Operations Center (EOC) - Flight Operations**

EOSDIS Data Flow

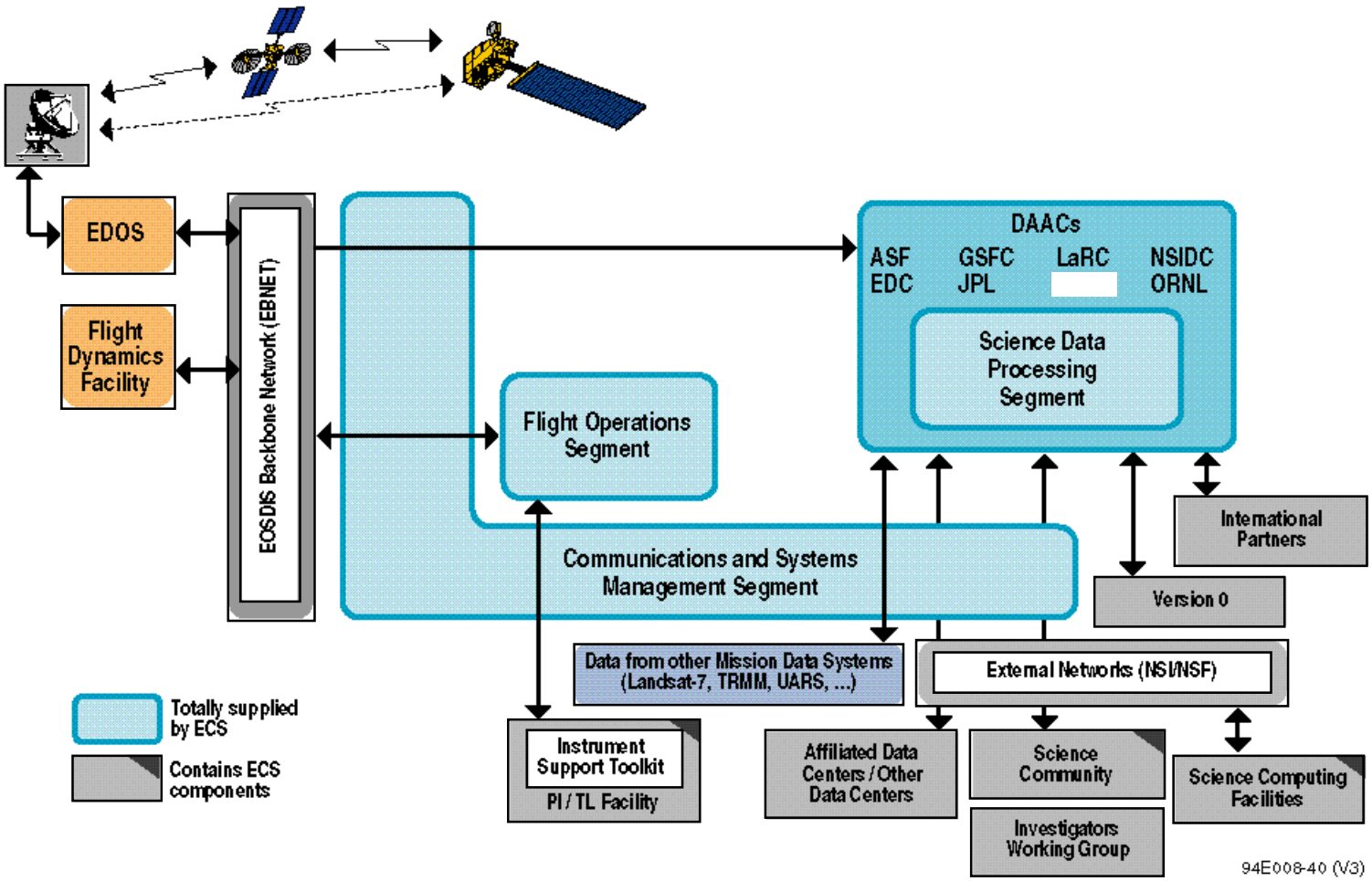

System Functional Overview (Cont.)

- **Data from EOS AM-1 satellite instruments**
  - **transmitted from EOS satellites through the Tracking and Data Relay Satellites (TDRS) to the receiving station (White Sands, NM)**
    - » **generally (nominally) transmitted in a single, combined telemetry stream**
  - **then the data are transmitted via EOSDIS Backbone Network (EBnet) circuits to the EDOS Level Zero Processing Facility (LZPF) at GSFC**
  - **satellite data are processed to recover the raw instrument data at LZPF**
- **EOS missions subsequent to AM-1**
  - **science data will be transmitted to the LZPF from high-latitude X-band EOSDIS ground stations in Alaska and Norway**

System Functional Overview (Cont.)

- **International Partner (IP) satellites**
  - **downlink directly to the International Partner Ground Systems (IPGSs) via their ground receiving stations**
  - **data from NASA instruments on the IP platforms are either….**
    - » **transmitted to GSFC via commercial networks**
    - » **sent on hard media (disk or tape)**
- **Landsat-7**
  - **transmits downlink data**
    - » **directly to the Landsat-7 Ground Station (LGS) at the Earth Resources Observation Systems (EROS) Data Center (EDC)**
    - » **to International Ground Stations**

System Functional Overview (Cont.)

- **EDOS**
  - **responsible for spacecraft data capture and distribution**
  - **processes satellite data to recover the raw, Level 0 instrument data**
  - **distributes Level 0 instrument data for archiving and processing**
    - » **to the ECS SDPS (designated DAACs)**
    - » **via EBnet**
  - **provides archive services for Level 0 data**
    - » **EDOS Data Archive Facility (DAF), Fairmont, WV**

System Functional Overview (Cont.)

- **EDOS (Cont.)**
  - **provides space and ground interfaces between the EOS spacecraft via the Space Network (SN)/ Tracking and Data Relay Satellite System (TDRSS) and the EOS Ground System (EGS), the EOC, and DAAC elements of EOSDIS**
  - **provides an interface for the uplink (transmission to the spacecraft) of commands**

System Functional Overview (Cont.)

- **Suppliers of non-EOS data products (data sets)**
  - **Affiliated Data Centers (ADCs)**
    - » **allow access to non-EOS data sets to satisfy ECS user queries and to provide ancillary data for the generation of ECS standard products**
    - » **National Environmental Satellite Data and Information Service (NESDIS) of the National Oceanic and Atmospheric Administration (NOAA) (for example)**
  - **other mission data systems**
    - » **Landsat Processing System (LPS)**
    - » **ECS provides user access, and product archive and distribution functions for Landsat-7 data and information**
  - **Other Data Centers (ODCs)**

System Functional Overview (Cont.)

- **Ancillary data are transferred over external networks**
  - **NASA Science Internet (NSI)**
  - **National Science Foundation (NSF) Internet**

System Functional Overview (Cont.)

- **DAACs**
  - **house the ECS computing facilities and operational staff needed for product generation and managing and storing…**
    - » **EOSDIS data**
    - » **associated metadata**
    - » **associated browse data**
  - **receive requests for data products and other archived information from users**
  - **distribute requested data**
  - **provide open access to the EOS data by all members of the science community**
    - » **previous research satellite projects granted selected investigators proprietary data rights for a number of years after data acquisition**

System Functional Overview (Cont.)

- **ECS users**
  - **most science users access EOS data products at the DAACs via external networks such as the NSI**
  - **include facilities and organizations not participating directly in the EOS Program**
    - » **users of other NASA data systems and archives**
    - » **users of other government data systems and archives**
    - » **university research users**
    - » **international investigators/data centers**
    - » **commercial data systems**
  - **may acquire ECS-provided tool sets permitting them to search for and order data**

System Functional Overview (Cont.)

- **EOS Internal Communications**
  - **CSMS provides system management functions and communications services for ECS**
    - » **local area network (LAN) services**
    - » **connectivity to external networks**
  - **DAACs exchange data via the EBnet**
    - » **DAAC may receive data products generated at other DAACs which it needs as inputs to its own processing**
    - » **DAAC distributes data products it produces to other DAACs which need those products as input**

System Functional Overview (Cont.)

- **EBnet**
  - **provides wide-area communications circuits and facilities between and among various EOS Ground System (EGS) elements**
  - **transports spacecraft command, control, and science data nationwide on a continuous basis, 24 hours a day, 7 days a week**
    - » **real-time data include mission-critical data related to the health and safety of on-orbit space systems and raw science telemetry as well as prelaunch testing and launch support**
    - » **science data include information collected from spacecraft instruments and various levels of processed science data including expedited data sets, production data sets, and rate-buffered science data**

System Functional Overview (Cont.)

- **EBnet (Cont.)**
  - **serves as the interface to other systems**
    - » **DAACs**
    - » **users**
    - » **NSI**
  - **includes a campus interface**
    - » **provides communications between the Wide Area Network (WAN) and Local Area Network (LAN)**

EOSDIS Backbone Network (EBnet)

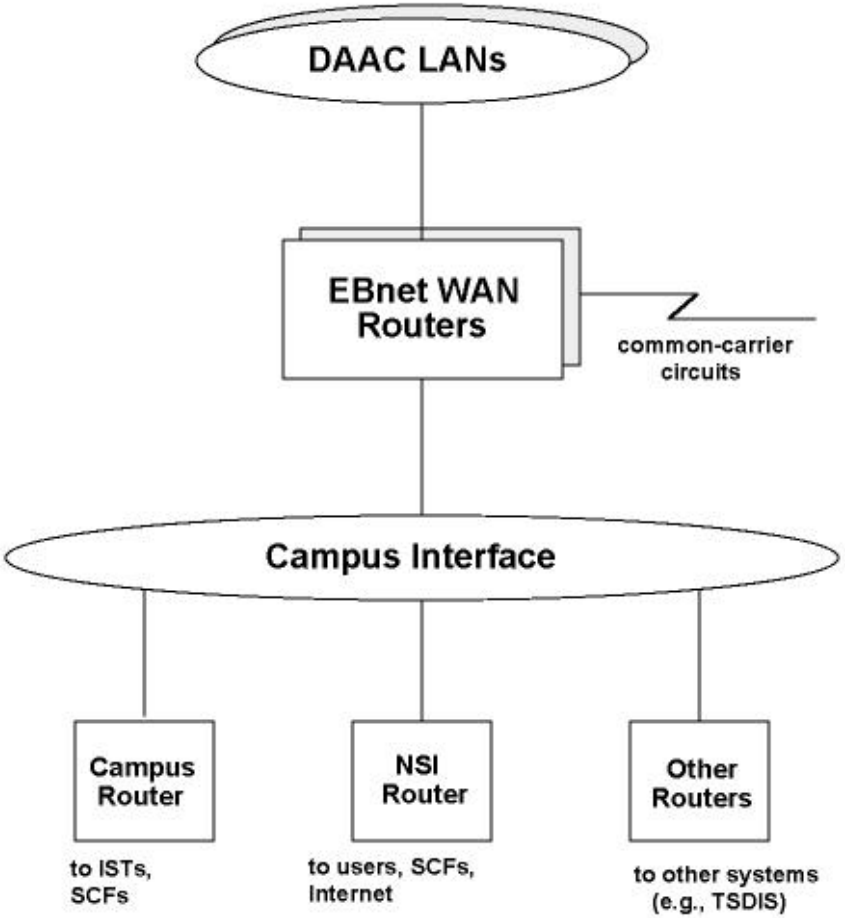

System Functional Overview (Cont.)

- **Science Computing Facilities (SCFs)**
  - **located at science investigator facilities**
  - **perform scientific research**
  - **develop science data processing software**
  - **provide data archiving and distribution capabilities**
  - **employ a user interface that facilitates browsing, requesting, and delivering data from archives to investigators**
  - **some perform scientific quality assurance of EOS data products (applicable SCFs for the investigators responsible for the products)**

System Functional Overview (Cont.)

- **Science Computing Facilities (SCFs) (Cont.)**
  - **use ECS-provided "toolkits" to support the SCF activities**
    - » **Science Data Processing (SDP) Toolkit is used for developing and validating science algorithms at the SCF and transferring the algorithms to the DAACs**
    - » **Instrument Support Terminal (IST) Toolkit (available at some SCFs) supports planning and scheduling of spacecraft instruments**

System Functional Overview (Cont.)

- **Science Computing Facilities (SCFs) (Cont.)**
  - **software for generating EOS *standard* science data products is developed by the science investigators at their facilities**
    - » **Investigator-developed software and algorithms for EOS standard products are integrated with the ECS and installed at the DAACs**
  - **EOS *special* products are produced at the investigator facilities**
  - **special products that become community-accepted become standard products through an Investigator Working Group (IWG)-determined assessment**
    - » **software eventually becomes integrated into the production environment at the DAACs**

System Functional Overview (Cont.)

- **EOC - EOS Flight Operations (FOS)**
  - **EOS missions (flight operations) are coordinated from the EOC**
    - » **spacecraft operations**
    - » **instrument operations**
  - **Non-U.S. instruments on U.S. platforms are operated and monitored through IP Instrument Control Centers (ICCs)**
  - **FOS (at the EOC)**
    - » **maintains spacecraft and instrument health and safety**
    - » **monitors spacecraft performance**

System Functional Overview (Cont.)

- **EOC - EOS Flight Operations (FOS) (Cont.)**
  - **FOS interfaces with EDOS for the following functions:**
    - » **provides spacecraft and instrument uplink data to EDOS**
    - » **receives real-time or spacecraft recorder and instrument housekeeping data, spacecraft and instrument command status data, and spacecraft processor memory dump data from EDOS**
    - » **exchanges accounting, fault coordination, data operations status, and planning information with EDOS**
    - » **coordinates data delivery services with EDOS**

System Functional Overview (Cont.)

- **EOC - EOS Flight Operations (FOS) (Cont.)**
  - **EOC interfaces with the Flight Dynamics Facility (FDF) for the following functions:**
    - » **receives predicted orbit data, including predicted ground track for scheduling from the FDF**
    - » **receives contact scheduling data from the FDF**
    - » **cooperates with FDF in the development of plans for corrective firings for spacecraft maneuvers**
    - » **receives, schedules, and implements plans from FDF**
    - » **provides attitude sensor data to the FDF for determining spacecraft attitude**
  - **FDF**
    - » **monitors the spacecraft attitude and navigation system performance**
    - » **provides orbit and attitude products to support both flight operations and science processing**

System Functional Overview (Cont.)

- **EOC - EOS Flight Operations (FOS) (Cont.)**
  - **provides the SDPS with the following types of information:**
    - » **spacecraft information, including orbit data**
    - » **acquisition plans and schedules**
  - **exchanges planning and scheduling information with the IP-ICCs**
  - **sends mission status to the IP-ICCs**
  - **receives instrument commands and status from the IP-ICCs**
  - **exchanges instrument planning and scheduling information with the IST**

System Functional Overview (Cont.)

- **Instrument uplink data**
  - **generated by the instrument team using the IST**
  - **received, validated at a high level, and integrated by EOC**
  - **EOC receives instrument status information from the IST to perform high-level monitoring**
- **SMC (CSMS)**
  - **EOC receives EOS management and operation directives, including science policy and guidelines from the IWG plan, via the SMC (CSMS)**
  - **EOC furnishes EOC management and operations status via the SMC (CSMS)**

System Functional Overview (Cont.)

- **EOSDIS Version 0 (V0)**
  - **early "working prototype" of selected EOSDIS functionality**
  - **hosted and operated by the DAACs**
  - **interconnects existing data systems at the DAACs via electronic networks**
  - **provides services such as….**
    - » **data ingest**
    - » **archive**
    - » **catalog**
    - » **distribution**
    - » **user support services**

System Functional Overview (Cont.)

- **EOSDIS Version 0 (V0)**
  - **does not have all the functional capabilities, fault tolerance, or reliability provisions of the ECS**
  - **has been used and evaluated by the users**
    - » **has provided feedback concerning the required functional capability of the ECS**
- **SDPS provides interoperability with V0 during the ECS early development phases**
- **SDPS will participate in the migration of V0 data to ECS**

System Functional Overview (Cont.)

- **NASA institutional services**
  - **Space Network (SN)**
    - » **Tracking and Data Relay Satellite System (TDRSS)**
    - » **Ground Terminals**
    - » **Network Control Center**
  - **Flight Dynamics Facility (FDF)**
  - **NASA Communications (NASCOM)**
    - » **NASCOM Operational Local Area Network (NOLAN)**
  - **Deep Space Network (DSN)**
  - **Ground Network (GN)**
  - **X-Band Backup Ground Stations**

System Functional Overview (Cont.)

- **NASA institutional services (Cont.)**
  - **Wallops Orbital Tracking Station (WOTS)**
  - **Program Support Control Network (PSCN)**
  - **Sensor Data Processing Facility (SDPF)**

System Functional Overview (Cont.)

- **ECS Operations Locations (current and future)**
  - **Distributed Active Archive Centers (DAACs)**
    - » **Alaska SAR Facility (ASF)**
    - » **EROS Data Center (EDC)**
    - » **Goddard Space Flight Center (GSFC)**
    - » **Jet Propulsion Laboratory (JPL)**
    - » **Langley Research Center (LaRC)**
    - » **National Snow and Ice Data Center (NSIDC)**
    - » **Oak Ridge National Laboratory (ORNL)**
    - » **Socioeconomic Data Applications Center (SEDAC)**
  - **System Monitoring and Coordination Center (SMC)**
  - **EOS Operations Center (EOC)**
  - **ECS Sustaining Engineering Organization (SEO)**
  - **ECS System Integrated Logistics Support Organization (ILS)**

System Functional Overview (Cont.)

- **Institutions with which ECS has interfaces**
  - **Science Computing Facilities (SCFs)**
  - **International Partners' Instrument Control Centers (IP-ICCs)**
  - **Instrument Support Terminal (IST) Sites**
  - **Affiliated Data Centers (ADCs)**
    - » **NOAA/National Environmental Satellite, Data, and Information Service (NESDIS)**
    - » **National Center for Environmental Prediction (NCEP)**
    - » **Space Science and Engineering Center of the University of Wisconsin**
    - » **Incorporated Research Institutions for Seismology (IRIS) Data Center**

System Functional Overview (Cont.)

- **DAACs**
  - **Areas of specialization**
    - » **ASF - Synthetic Aperture Radar Study, Polar Processes**
    - » **EDC - Land Processes Imagery**
    - » **GSFC - Upper Atmosphere, Atmospheric Dynamics, Global Biosphere, Geophysics**
    - » **JPL - Ocean Circulation and Air-Sea Interaction**
    - » **LaRC - Tropospheric Radiation Budget, Aerosols, Chemistry**
    - » **NSIDC - Cryosphere (Non-SAR)**
    - » **ORNL - Biogeochemical Dynamics**
    - » **SEDAC - Policy/Decision Making Applications of Combined MTPE and Socio-Economic Data**

System Functional Overview (Cont.)

- **DAACs (Cont.)**
  - **Testbed DAACs**
    - » **EDC**
    - » **GSFC**
    - » **LaRC**
    - » **NSIDC**

System Functional Overview (Cont.)

- **DAACs (Cont.)**
  - **Functions:**
    - » **Integration and test of science software**
    - » **archiving science software files/documentation**
    - » **supplying operational environment for science software**
    - » **executing science software to produce standard data products**
    - » **archiving and distributing standard data products**
    - » **accepting, archiving and distributing special products generated by other facilities**
    - » **advertising data and providing user support**

System Functional Overview (Cont.)

- **SMC**
  - **not active for Testbed**
    - » **at least some functions will be part of the Testbed**
  - **to be located at GSFC (Release B.0)**
  - **Enterprise Monitoring and Coordination (EMC) - set of CSMS services at the SMC**
    - » **MSS provides a system-wide management view for monitoring and control purposes**
    - » **CSS provides services (e.g., electronic mail and bulletin boards) for coordination**

System Functional Overview (Cont.)

- **SMC (Cont.)**
  - **Functions::**
    - » **performance management (system-wide performance analysis/management)**
    - » **configuration management (system-wide baseline configurations)**
    - » **security management (detect system-wide trends and incidents)**

System Functional Overview (Cont.)

- **SEO**
  - **located at GSFC**
  - **responsive to the ESDIS Project Office and the Project Scientist**
  - **system perspective on:**
    - » **maintenance**
    - » **sustaining engineering**
    - » **training**
  - **analyzes how to integrate new technologies and concepts into ECS**
  - **monitors M&O activities to assure ECS reliability, maintainability and availability**

System Functional Overview (Cont.)

- **ILS Organization**
  - **system-level logistics support of commercial off-the-shelf (COTS) software and hardware**
    - » **procurement**
    - » **accounting**
    - » **installation**
    - » **maintenance**
    - » **training**

System Functional Overview (Cont.)

- **EOC**
  - **located at GSFC**
  - **EOS mission control center**
    - » **mission planning**
    - » **command and control of U.S. EOS spacecraft and instruments**
  - **operated by the Flight Operations Team (FOT)**
    - » **maintains spacecraft and instrument health and safety**
    - » **monitors spacecraft performance**
    - » **performs spacecraft engineering analysis**
    - » **monitors mission performance of instruments**

System Functional Overview (Cont.)

- **SCFs**
  - **home for the Principal Investigators (PIs) and/or Instrument Teams (ITs)**
  - **develop/update algorithms and science software**
  - **calibrate EOS instruments**
  - **produce special data sets (products)**
  - **perform data quality checking**
  - **analyze EOS data**

System Functional Overview (Cont.)

- **International Partners Instrument Control Centers**
  - **provide instrument plans and schedules to EOC**
  - **coordinate scheduling conflicts with EOC**
  - **send instrument commands to spacecraft via EOC**

System Functional Overview (Cont.)

- **Instrument Support Terminal (IST) Sites**
  - **ISTs are software toolkits delivered by ECS to PI and TL sites for U.S. EOS instruments**
  - **ISTs provide interfaces with EOC to enable PI/TL participation in the following activities related to their instruments:**
    - » **planning**
    - » **scheduling**
    - » **commanding**
    - » **monitoring**

System Functional Overview (Cont.)

- **ADCs**
  - **non-EOS data centers**
    - » **provide access to non-EOS data or non-EOSDIS services required by EOS**
    - » **receive selected EOS data sets**
  - **ADC-provided services may include helping develop algorithms/software for data processing**
  - **NOAA National Environmental Satellite Data and Information Service (NESDIS)**
    - » **makes available data from geostationary and polar-orbiting meteorological satellites**

System Functional Overview (Cont.)

- **ADCs**
  - **NOAA National Environmental Satellite Data and Information Service (NESDIS)**
    - » **geostationary and polar-orbiting meteorological satellite data**
  - **National Center for Environmental Prediction (NCEP)**
    - » **routine weather and climate forecasts for the U.S.**
  - **Space Science and Engineering Center of the University of Wisconsin**
    - » **Level 1 data from NOAA Geostationary Operational Environmental Satellites (GOES)**
  - **Incorporated Research Institutions for Seismology (IRIS) Data Center**
    - » **takes Wide Band Data Collection System data**

Operational Software Configuration Overview

- **Major functional components used by M&O:**
  - **Science Data Processing Segment (SDPS)**
  - **Communications and System Management Segment (CSMS)**

Operational Software Configuration Overview (Cont.)

- **SDPS subsystems (7)**
  - **Client Subsystem (CLS)**
  - **Interoperability Subsystem (IOS)**
  - **Data Management Subsystem (DMS)**
  - **Data Server Subsystem (DSS)**
  - **Ingest Subsystem (INS)**
  - **Planning Subsystem (PLS)**
  - **Data Processing Subsystem (DPS)**

Science Data Processing Segment (SDPS)

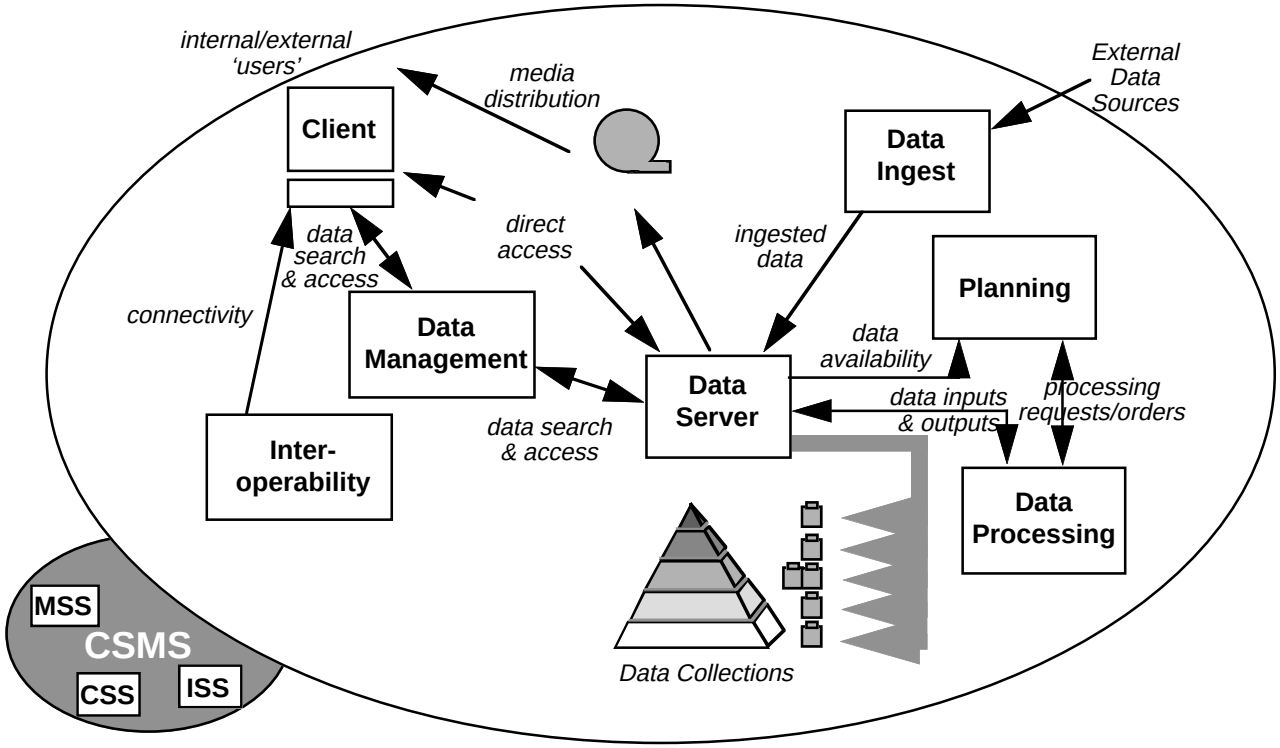

Operational Software Configuration Overview (Cont.)

- **SDPS functional groupings**
  - **data storage and management (Data Server Subsystem)**
    - » **archive science data**
    - » **search for and retrieve archived data**
    - » **manage the archives**
    - » **stage data resources needed as input to or resulting as output from science data processing**

Operational Software Configuration Overview (Cont.)

- **SDPS functional groupings (Cont.)**
  - **data search and retrieval (Client Subsystem, Data Management Subsystem and Interoperability Subsystem)**
    - » **“data pull side” of the system**
    - » **science user interface functions (CLS)**
    - » **data search support functions (DMS)**
    - » **location of services and data (IOS)**

Operational Software Configuration Overview (Cont.)

- **SDPS functional groupings (Cont.)**
  - **data processing (Data Processing Subsystem and Planning Subsystem)**
    - » **“data push side” of the system**
    - » **processing environment for science software (DPS)**
    - » **long- and short-term planning of science data processing (PLS)**
    - » **management of the production environment (PLS)**
  - **data ingest (Ingest Subsystem)**
    - » **“data push side” of the system**
    - » **interfaces with external applications**
    - » **data staging capabilities**
    - » **storage buffer for Level 0 data**

Operational Software Configuration Overview (Cont.)

- **CSMS subsystems (3)**
  - **Communications Subsystem (CSS)**
  - **Systems Management Subsystem (MSS)**
  - **Internetworking Subsystem (ISS)**

Communications and System Management Segment (CSMS)

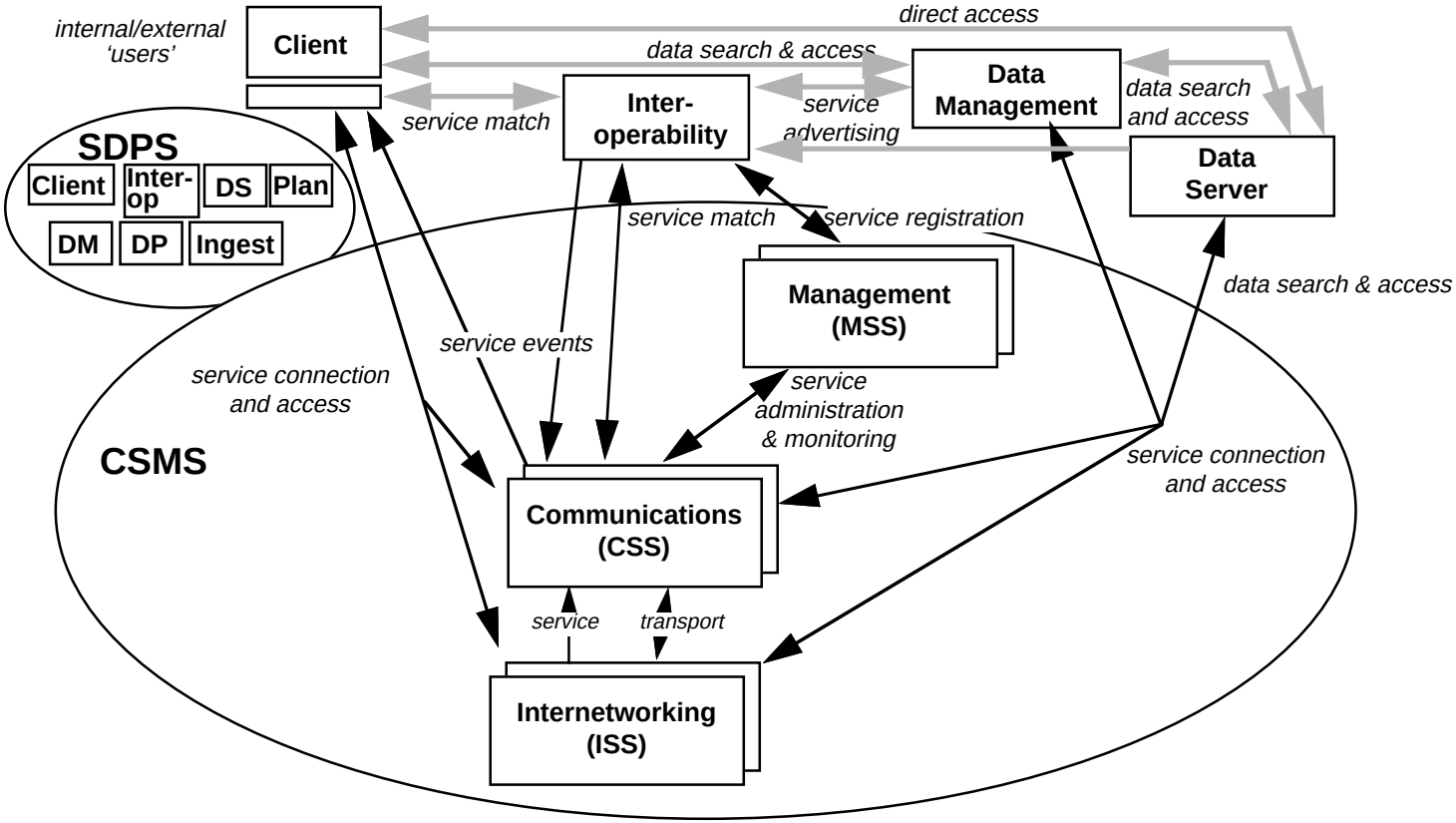

Operational Software Configuration Overview (Cont.)

- **CSMS functional groupings**
  - **Communications Subsystem**
    - » **key to the interoperation of SDPS subsystems in an object-oriented, distributed-object communications environment**
    - » **CSS provides the distributed-object communications environment**
    - » **allows software objects to communicate reliably without regard to location or the specifics of the communications mechanisms**
    - » **provides infrastructure services for the distributed object environment based on Distributed Computing Environment (DCE)**
    - » **provides common facilities for file transfer, electronic mail, bulletin board services and remote terminals**

Operational Software Configuration Overview (Cont.)

- **CSMS functional groupings (continued)**
  - **Systems Management Subsystem**
    - » **provides network and system management for all ECS resources (hardware and software)**
    - » **decentralized system**
    - » **two-level ECS management view - EMC & LSM**
    - » **agents (software that interacts with a device's control software to facilitate the exchange of command information) provide information to or receive commands from MSS**
    - » **proxies monitor software applications that do not interact directly with MSS (e.g., DPS is the proxy for the science software it executes)**
    - » **general management functions include security management and configuration management**

Operational Software Configuration Overview (Cont.)

- **CSMS functional groupings (continued)**
  - **Internetworking Subsystem**
    - » **provides local area networking (LAN) services at ECS installations to interconnect and transport data among ECS resources**
    - » **provides access services to link ECS LAN services to wide-area networks (WANs), point-to-point links and institutional network services (e.g., NSI)**

Operation Hardware Configuration Overview

- **ECS equipment**
  - **general types**
    - » **server hosts**
    - » **science processors**
    - » **operator interfaces (workstations or X-terminals)**
    - » **temporary data storage units**
    - » **printers**
    - » **network equipment, including fiber distributed data interface (FDDI) network equipment**

Operation Hardware Configuration Overview (Cont.)

- **Servers**
  - **HP J210**
  - **SGI Challenge L**
  - **SGI Challenge XL**
  - **SGI Indigo**
  - **SUN Sparc 20/50**
  - **SUN Sparc 20/71**
  - **SUN Sparc 20/712**

Operation Hardware Configuration Overview (Cont.)

- **Science processors**
  - **SGI PC XL**
  - **SGI Indigo Impact**
- **Workstations**
  - **SUN Sparc 20/50**
- **X-Terminals**
  - **NCD HMX-Pro**

Operation Hardware Configuration Overview (Cont.)

- **Temporary storage, working storage or database management system (DBMS) data files**
  - **HP redundant arrays of inexpensive disks (RAIDs)**
  - **SUN RAIDs**
  - **SGI RAIDs**
  - **8mm stackers**
  - **4mm stackers**
  - **6250 tape drives**

Operation Hardware Configuration Overview (Cont.)

- **Printers**
  - **HP LaserJet 4M+**
- **Internetworking equipment**
  - **FDDI network equipment**

Operation Hardware Configuration Overview (Cont.)

- **DAAC Hardware Summaries**
  - **Refer to Tables 4 and 5 in the Student Text**
- **Testbed configured from the hardware and software assets of the canceled ECS Release A**
  - **Not all subsystems of Release A have been included in the Testbed**
  - **Some subsystems are present but are not expected to be used for Testbed operations**
    - » **mission of the Testbed is to support Science Software Integration and Test (SSI&T) rather than the whole range of operations planned for Release A**

Operation Hardware Configuration Overview (Cont.)

- **Testbed equipment functions**
  - **planning (PLS)**
  - **science processing (DPS)**
  - **SSI&T (DPS)**
  - **ingest client (INS) (present but not used)**
  - **access control and management (DSS) (present but not used)**
  - **working storage (DSS) (present but not used)**
  - **data repository (DSS) (present but not used)**
  - **distribution and ingest peripherals (DSS) (present but not used)**
  - **system management (MSS)**
  - **distributed computing (CSS)**
  - **internetworking (ISS)**

Operation Hardware Configuration Overview (Cont.)

- **Planning Subsystem**
  - **planning hardware**
    - » **planning server (SUN Sparc 20/71)**
    - » **planning workstation (SUN Sparc 20/50)**
    - » **RAIDs**

Operation Hardware Configuration Overview (Cont.)

- **Data Processing Subsystem**
  - **science processing**
    - » **science processors (SGI PC XL)**
    - » **queuing server (SUN Sparc 20/71)**
    - » **X-Terminals (NCD HMX-Pro)**
    - » **8mm tape stacker**
    - » **RAIDs**
  - **science software integration and test (SSI&T)**
    - » **SSI&T workstations/DBMS servers (SUN Sparc 20/50)**
    - » **SSI&T workstations (SUN Sparc 20/50)**
    - » **printers (HP LaserJet 4M+)**

Operation Hardware Configuration Overview (Cont.)

- **Ingest Subsystem**
  - **not required for Testbed operations**
  - **ingest client**
    - » **ingest servers (SGI Indy or SGI Challenge L)**
    - » **8mm tape stackers**
    - » **RAIDs (shared by ingest servers)**
    - » **front-end SUN (SUN Sparc 20/50, SUN Sparc 20/712)**

Operation Hardware Configuration Overview (Cont.)

- **Data Server Subsystem**
  - **not required for Testbed operations**
  - **access control and management**
    - » **access/process coordinator (APC) servers (SGI Challenge L)**
    - » **RAIDs (shared by servers)**
    - » **operations workstations (SUN Sparc 20/50)**
    - » **front-end SUN (SUN Sparc 20/50)**
  - **working storage**
    - » **RAIDs (shared by FSMS servers)**

Operation Hardware Configuration Overview (Cont.)

- **Data Server Subsystem (continued)**
  - **data repository**
    - » **File Storage Management System (FSMS) servers (SGI Challenge XL)**
    - » **Database Management System (DBMS) servers (SGI Challenge XL)**
    - » **archive robot (EMASS AML/Mod 2)**
    - » **linear magnetic drives (3590)**
    - » **RAIDs (supporting DBMS servers)**

Operation Hardware Configuration Overview (Cont.)

- **Data Server Subsystem (continued)**
  - **distribution and ingest peripherals**
    - » **distribution servers (SUN Sparc 20/712)**
    - » **RAIDs (shared by distribution servers)**
    - » **8mm tape stacker**
    - » **4mm tape stacker**
    - » **tape drive (6250)**
    - » **printers (HP LaserJet 4M+)**

Operation Hardware Configuration Overview (Cont.)

- **Systems Management Subsystem**
  - **management hardware**
    - » **Management Subsystem (MSS) servers (HP J210/1)**
    - » **configuration management (CM) servers (SUN Sparc 2/50 or SUN Sparc 20/71)**
    - » **MSS Netscape server (SUN Sparc 20/50)**
    - » **MSS workstations (SUN Sparc 20/50)**
    - » **RAIDs (shared with the Communications Subsystem)**
    - » **printers (HP LaserJet 4M+)**

Operation Hardware Configuration Overview (Cont.)

- **Communications Subsystem**
  - **distributed computing**
    - » **Communications Subsystem (CSS) server (HP J210/1)**
    - » **RAID (shared with the Management Subsystem)**

Operation Hardware Configuration Overview (Cont.)

- **Internetworking Subsystem**
  - **internetworking hardware**
    - » **FDDI switch**
    - » **Alantec Power Hub 7000 with FDDI cards and power supplies**
    - » **FDDI concentrators**
    - » **bay networks**
    - » **FDDI cables**
    - » **Ethernet hub**
    - » **Cabletron Micro MAC-22E w/BRIM F6**
    - » **Ethernet cables**
    - » **local area network (LAN) analyzer**
    - » **communications cabinets**

COTS Software Overview

- COTS software acquired for Release A
  - refer to Table 6 in the Student Text
- COTS essential to Testbed operations
  - HP OpenView
  - Sybase
  - Distributed Defect Tracking System (DDTS)
  - AutoSys/AutoXpert
  - ClearCase

COTS Software Overview (Cont.)

- **HP OpenView (HPOV)**
  - **available through the Management Subsystem (MSS)**
    - » **monitors and reports on the performance of ECS hardware components**
    - » **displays the current status of ECS hardware resources**
    - » **can access and display performance data that has been logged by the database management program (Sybase)**
    - » **receives notification of faults and alerts the resource manager, production monitor and user services**

COTS Software Overview (Cont.)

- **HP OpenView (HPOV) (continued)**
  - **used by ECS personnel involved in resource management and fault management at the DAACs and the SEO**
    - » **DAAC Resource Manager**
    - » **DAAC System Test Engineer**
    - » **DAAC Computer Operators**
    - » **SEO System Test Engineer**

COTS Software Overview (Cont.)

- **Sybase**
  - **relational database management system (DBMS)**
  - **located on the Data Servers (SDPS)**
  - **manages Earth Science data**
  - **implements spatial searching**
  - **handles system administrative and operational data**
    - » **maintains logs**
    - » **database backup**
    - » **maintenance of database transaction logs**
    - » **database recovery**

COTS Software Overview (Cont.)

- **Sybase (continued)**
  - **manages other databases**
    - » **e.g., site event history database**
  - **has query capability**
    - » **access to site logs for detailed data used in system-wide fault data collection, trending, long-term fault analysis**
  - **has report writing capability**
  - **users:**
    - » **DAAC Database Administrator**

COTS Software Overview (Cont.)

- **Distributed Defect Tracking System (DDTS)**
  - **available through the Management Subsystem (MSS)**
  - **supports configuration management by acting as the ECS Change Request Manager**
    - » **keeps track of Configuration Change Requests (CCRs)**
  - **users:**
    - » **DAAC Maintenance Coordinators**
    - » **ILS Logistics Engineer**
  - **database administrators:**
    - » **CM Administrators at the DAACs and SEO**

COTS Software Overview (Cont.)

- **AutoSys/AutoXpert**
  - **production scheduling tool**
  - **part of the data processing subsystem (DPS)**
  - **supports production processing in the SDPS**
    - » **job monitoring**
    - » **scheduling**
    - » **fault notification**
    - » **restart**
  - **assists in determining**
    - » **effects of failure of a Data Processing Request (DPR)**
    - » **cause of failure**
    - » **actions to be taken due to the failure**
  - **user:**
    - » **DAAC Production Monitor**

COTS Software Overview (Cont.)

- **ClearCase**
  - **software baseline and change manager**
  - **provides version control of software objects**
  - **used for installing new/revised software code**
  - **used for checking software to confirm problems**
  - **users:**
    - » **DAAC and SEO Software Maintenance Engineers**
  - **database administrators:**
    - » **CM Administrators at the DAACs and SEO**

Operational Processes

- **ECS Operational Processes**
  - **refer to Table 7 in the Student Text**
- **Testbed Operational Processes**
  - **System Operations Management**
    - » **System Administration**
    - » **Network Administration**
    - » **Problem Management**
    - » **System Troubleshooting**
    - » **Configuration Management**
  - **Science Operations**
    - » **Production Planning and Processing**
    - » **Database Administration**
    - » **Software Maintenance**
    - » **Science Software Integration and Test**

Operational Processes (Cont.)

- **System Administration**
  - **DAAC and SEO System Administrators perform system administration functions**
    - » **installing workstations**
    - » **starting up and shutting down the system**
    - » **backing up and restoring the system**
    - » **maintaining the system log**
    - » **controlling access to the system**
    - » **monitoring system security**

Operational Processes (Cont.)

- **System Administration (continued)**
  - **software tools (examples):**
    - » **HP OpenView**
    - » **Management Subsystem (MSS) graphical user interfaces (GUIs)**

Operational Processes (Cont.)

- **Network Administration**
  - **SEO and DAAC System Administrators, system-level Network Analyst and DAAC Resource Managers perform network administration functions**
    - » **maintaining LAN and local DCE configuration**
    - » **network performance monitoring**
    - » **reporting on network operations**
  - **software resources (examples)**
    - » **ClearCase**
    - » **HP OpenView**

Operational Processes (Cont.)

- **Problem management**
  - **all M&O operations and support personnel are involved in problem management activities**
    - » **identifying, documenting, investigating, and resolving problems with ECS hardware, software, documentation, and procedures**
    - » **writing Non-Conformance Reports (NCRs)**
    - » **managing NCRs through the problem resolution process**
  - **software resource:**
    - » **DDTS**

Operational Processes (Cont.)

- **System Troubleshooting**
  - **all ECS operators participate in troubleshooting of the systems they operate**
    - » **identifying, locating, analyzing, and determining the cause of system faults**
    - » **monitoring system status and performance**
  - **DAAC and SEO System Administrators**
    - » **perform troubleshooting of their systems**
  - **ECS Fault Manager**
    - » **focal point for inter-ECS site problems**
    - » **provides support for other centers' troubleshooting activities**

Operational Processes (Cont.)

- **System Troubleshooting (continued)**
  - **software resources (examples)**
    - » **HP OpenView**
    - » **Sybase**
    - » **MSS GUIs**

Operational Processes (Cont.)

- **Configuration Management**
  - **DAAC and SEO CM Administrators provide configuration management and monitoring at their respective levels**
    - » **ensure that hardware, software, and procedure changes to the baseline are properly documented and coordinated**
    - » **manage Change Request Manager database**
    - » **manage SW Change Manager database**
    - » **manage Baseline Manager database**
  - **support the respective Configuration Control Boards**

Operational Processes (Cont.)

- **Configuration Management (cont.)**
  - **software resources:**
    - » **ClearCase**
    - » **XRP-II**
    - » **DDTS**

Operational Processes (Cont.)

- **Production Planning and Processing**
  - **DAAC Production Planners and Production Monitors perform the production planning and processing functions**
    - » **production planning is intended to make optimum use of computing resources when generating science data products (during production processing)**
    - » **DAAC Production Planners develop daily, weekly and monthly DAAC science production schedules. They maintain the production database, specifying science software characteristics and priorities**
    - » **DAAC Production Monitors manage processing schedules, monitor science software execution, and support science software integration and test (SSI&T)**
  - **software resources**
    - » **Production Request Editor GUI**
    - » **Planning Workbench GUIs**
    - » **AutoSys/AutoXpert**

Operational Processes (Cont.)

- **Database Administration**
  - **DAAC Database Administrators perform database administration functions**
    - » **maintain databases**
    - » **install SQL server products**
    - » **manage disk storage space**
    - » **manage ECS personnel accounts and privileges**
    - » **perform database backup and recovery operations**
    - » **perform daily database synchronization**
  - **software resources:**
    - » **Sybase**

Operational Processes (Cont.)

- **Software Maintenance**
  - **Many ECS jobs involve software (both commercial and custom software) maintenance functions**
    - » **installing (including configuring) software**
    - » **troubleshooting software problems**
    - » **correcting software problems**
  - **SEO and DAAC System Administrators**
    - » **install software on host computers and workstations**
  - **System-level and DAAC Maintenance Coordinators**
    - » **coordinate the actions of COTS vendors regarding resolution of SW problems and upgrades**
    - » **coordinate with the Software Maintenance Engineer to ensure adequate and timely assistance**

Operational Processes (Cont.)

- **Software Maintenance (continued)**
  - **SEO System Engineer**
    - » **responds to system-wide software problems**
    - » **works with DAAC personnel in analysis of software requirements, problems, anomalies and formulation of recommended solutions**
  - **SEO and DAAC Software Maintenance Engineers**
    - » **produce, deliver and document corrections, modifications and enhancements to ECS software (including COTS)**
    - » **adapt or incorporate COTS software for ECS use**
  - **software resources:**
    - » **ClearCase**

Operational Processes (Cont.)

- **Science Software Integration and Test (SSI&T)**
  - **DAAC Science Software I&T Support Engineers and DAAC Science Data Specialists perform the SSI&T functions**
    - » **provide support to scientists in the development and integration of science software for both updates and new science software into the DAAC ECS system**
    - » **perform standards-checking on all delivered software, including source code, scripts, process control files and related documentation**
    - » **provide support for metadata updates and additions for science data products**
    - » **support the investigation and resolution of science processing problems**
    - » **lead ECS-related long-range planning and preparations for data set SSI&T**
  - **software resource:**
    - » **ClearCase**

Exercise: Tour of the Facility

- **Follow a tour guide on a tour of the facility and observe the positions of ECS components in the facility**
- **Ask the tour guide relevant questions**

Exercise: Performing an Operator Login and Logout

- Observe the instructor's login to ECS
- Login to ECS
- Observe the features of ECS as the instructor describes them
- Observe the instructor's logout from ECS
- Log out from ECS