311-CD-001-005

**EOSDIS Core System Project**

# Flight Operations Segment (FOS) Database Design and Database Schema for the ECS Project

This document has not yet been approved by the Government for general use or distribution.

September 1997

Hughes Information Technology Systems
Upper Marlboro, Maryland

# Flight Operation Segment (FOS) Database Design and Database Schema for the ECS Project

**September 1997**

Prepared Under Contract NAS5-60000
CDRL Item #050

**SUBMITTED BY**

| | |
|---|---|
| Deborah P. Dunn /s/ | 9/29/97 |
| Debbie Dunn, FOS CCB Chairman<br>EOSDIS Core System Project | Date |

**Hughes Information Technology Systems**
Upper Marlboro, Maryland

311-CD-001-005

This page intentionally left blank.

# Preface

This document is a formal contract deliverable with an approval code 1. It requires Government review and approval prior to acceptance and use. This document is under ECS contractor configuration control. Once this document is approved, Contractor approved changes are handled in accordance with Class I and Class II change control requirements described in the EOS Configuration Management Plan, and changes to this document shall be made by document change notice (DCN) or by complete revision.

Any questions should be addressed to:

Data Management Office
The ECS Project Office
Hughes Information Technology System
1616 McCormick Drive
Upper Marlboro, MD 20774-5372

This page intentionally left blank.

# Abstract

The FOS Database Design and Database Schema provides the FOS Database Detailed Design.

***Keywords:*** FOS, design, specification, database, schema, Sybase

This page intentionally left blank.

# Change Information Page

| List of Effective Pages | |
|---|---|
| **Page Number** | **Issue** |
| Title | Submitted as Final |
| iii through xx | Submitted as Final |
| 1-1 and 1-2 | Submitted as Final |
| 2-1 through 2-4 | Submitted as Final |
| 3-1 through 3-4 | Submitted as Final |
| 4-1 and 4-2 | Submitted as Final |
| 5-1 through 5-6 | Submitted as Final |
| 6-1 and 6-2 | Submitted as Final |
| 7-1 through 7-94 | Submitted as Final |
| 8-1 and 8-2 | Submitted as Final |
| A-1 through A-18 | Submitted as Final |
| AB-1 through AB-4 | Submitted as Final |

| Document History | | | |
|---|---|---|---|
| **Document Number** | **Status/Issue** | **Publication Date** | **CCR Number** |
| 311-CD-001-001 | Original | November 1994 | 94-0174 |
| 311-CD-001-002 | Submitted as Final | January 1995 | 95-0006 |
| 311-CD-001-003 | Submitted as Final | October 1995 | 95-0721 |
| 311-CD-001-004 | Submitted as Final | December 1996 | 96-1451 |
| 311-CD-001-005 | Submitted as Final | September 1997 | 97-1343 |

This page intentionally left blank.

# Contents


## Preface

## Abstract

## 1. Introduction

1.1 Identification ..... 1-1
1.2 Scope ..... 1-1
1.3 Purpose ..... 1-1
1.4 Status and Schedule ..... 1-1
1.5 Document Organization ..... 1-1

## 2. Related Documentation

2.1 Parent Document ..... 2-1
2.2 Applicable Documents ..... 2-1
2.3 Information Documents ..... 2-3

## 3. Flight Operations Segment (FOS) Overview

3.1 Flight Operations Segment Subsystems ..... 3-1

## 4. FOS Database Overview

4.1 Unvalidated Database ..... 4-1
4.1.1 PDB Data ..... 4-1
4.1.2 FDD Data ..... 4-1
4.2 Validated Database ..... 4-2
4.3 Operational Database ..... 4-2

## 5. FOS Database Configuration Control and Operations Concept


5.1 Configuration Control ..... 5-1
5.1.1 Database Administrator ..... 5-1
5.1.2 Planners/Schedulers ..... 5-1
5.1.3 Change Control Board ..... 5-3
5.2 Operations Concept ..... 5-3
5.2.1 PDB Load ..... 5-4
5.2.2 PDB Validation ..... 5-5
5.2.3 Operational Data Generation ..... 5-5
5.2.4 ODF Generation ..... 5-5
5.2.5 Database Access ..... 5-5
5.2.6 Database Reports ..... 5-5
5.2.7 Database Backups ..... 5-5


## 6. FOS Database Installation and Initialization


6.1 Sybase Features ..... 6-1
6.1.1 Sybase Installation ..... 6-1
6.1.2 Sybase Table-Level Validation ..... 6-1
6.1.3 Sybase Security ..... 6-1
6.2 FOS Database Initialization Scripts ..... 6-1
6.2.1 Users ..... 6-2
6.2.2 Databases ..... 6-2
6.2.3 Tables ..... 6-2
6.2.4 Stored Procedures ..... 6-2
6.2.5 Triggers ..... 6-2


## 7. FOS Database Schema


7.1 Operational Tables ..... 7-8
7.2 Command Tables ..... 7-20
7.3 Telemetry Tables ..... 7-30
7.4 Planning and Scheduling Tables ..... 7-40

7.5 FOS FDF Products Tables ..... 7-56
7.6 Fixed Table Data ..... 7-80

## 8. Database Backup and Recovery Procedures

8.1 Backup Procedures ..... 8-1
8.2 Recovery Procedures ..... 8-2

## Appendix A. Sizing Requirements

## Figures

5.1.2-1 Activity Updates to the PDB ..... 5-2
5.1.2-2 IOT Updates to the PDB ..... 5-3
5.2-1 FOS Database Processing ..... 5-4

## Tables

7-1 FOS Operational Database Tables ..... 7-1
7-2 FOS Command Database Tables ..... 7-2
7-3 FOS Telemetry Database Tables ..... 7-3
7-4 FOS Planning and Scheduling Database Tables ..... 7-4
7-5 FOS FDF Products Database Tables ..... 7-5
7-6 Fixed Tables ..... 7-7
7.1-1 activity_severity_fix Table ..... 7-8
7.1-2 cmd_fixdata_pdb Table ..... 7-8
7.1-3 event_severity_fix Table ..... 7-8
7.1-4 file_loc_fix Table ..... 7-8
7.1-5 file_meta Table ..... 7-9
7.1-6 file_types_fix Table ..... 7-9
7.1-7 fos_activity_archive Table ..... 7-9

7.1-8 fos_activity_log Table ..... 7-10
7.1-9 fos_dir_table Table ..... 7-10
7.1-10 fos_event_archive Table ..... 7-10
7.1-11 fos_events Table ..... 7-11
7.1-12 fos_file_table Table ..... 7-11
7.1-13 fos_linklist_cat Table ..... 7-11
7.1-14 fos_load_cat Table ..... 7-12
7.1-15 fos_pids Table ..... 7-12
7.1-16 fos_request_queue Table ..... 7-13
7.1-17 fos_rms_role Table ..... 7-13
7.1-18 fos_sc_id Table ..... 7-13
7.1-19 fos_scheduptime_cat Table ..... 7-14
7.1-20 fos_string_table Table ..... 7-14
7.1-21 fos_subsys_fix Table ..... 7-14
7.1-22 fos_system_parms Table ..... 7-15
7.1-23 fos_uplinkinfo_cat Table ..... 7-15
7.1-24 ground_discretes Table ..... 7-15
7.1-25 interface_fix Table ..... 7-15
7.1-26 name_srvr Table ..... 7-16
7.1-27 odb_version Table ..... 7-17
7.1-28 odf_table Table ..... 7-17
7.1-29 packet_defs Table ..... 7-17
7.1-30 packet_types Table ..... 7-18
7.1-31 parm_type_fix Table ..... 7-18
7.1-32 unit_conv_fix Table ..... 7-18
7.1-33 unit_format_fix Table ..... 7-19
7.1-34 unit_type_fix Table ..... 7-19
7.1-35 user_auth Table ..... 7-19
7.1-36 user_roles Table ..... 7-19

7.2-1 cmd_desc_pdb Table ..... 7-20
7.2-2 cmd_dump Table ..... 7-20
7.2-3 cmd_fixdata_pdb Table ..... 7-20
7.2-4 cmd_flddef_pdb Table ..... 7-21
7.2-5 cmd_lgdesc_pdb Table ..... 7-21
7.2-6 cmd_maskgrp_pdb Table ..... 7-21
7.2-7 cmd_mmask_pdb Table ..... 7-22
7.2-8 cmd_mnem_rpt Table ..... 7-22
7.2-9 cmd_parm_pdb Table ..... 7-22
7.2-10 cmd_pstate_pdb Table ..... 7-23
7.2-11 cmd_tbldef_pdb Table ..... 7-23
7.2-12 cmd_type_cfx Table ..... 7-23
7.2-13 cmd_user_auth Table ..... 7-23
7.2-14 cmd_ustat_auth Table ..... 7-24
7.2-15 cmd_val_log Table ..... 7-24
7.2-16 cmd_vardata_pdb Table ..... 7-24
7.2-17 cmd_verify_pdb Table ..... 7-25
7.2-18 cmdcon_pdb_fix Table ..... 7-26
7.2-19 con_bitrule_pdb Table ..... 7-26
7.2-20 con_comrule_pdb Table ..... 7-26
7.2-21 con_noexistrule_pdb Table ..... 7-26
7.2-22 con_offsetrule_pdb Table ..... 7-27
7.2-23 con_postrule_pdb Table ..... 7-27
7.2-24 con_prerule_pdb Table ..... 7-27
7.2-25 con_scalarrule_pdb Table ..... 7-28
7.2-26 con_subfield_pdb Table ..... 7-28
7.2-27 con_subfldbit_pdb Table ..... 7-28
7.2-28 con_val_log Table ..... 7-29
7.2-29 rt_name_cfx Table ..... 7-29

7.2-30 tbl_type_cfx Table ..... 7-29
7.2-31 value_type_cfx Table ..... 7-29
7.3-1 const_type_tfx Table ..... 7-30
7.3-2 conv_type_tfx Table ..... 7-30
7.3-3 data_rep_tfx Table ..... 7-30
7.3-4 derived_oper_tfx Table ..... 7-30
7.3-5 tlm_calcurve_pdb Table ..... 7-31
7.3-6 tlm_cata Table ..... 7-31
7.3-7 tlm_constant_pdb Table ..... 7-32
7.3-8 tlm_context_pdb Table ..... 7-32
7.3-9 tlm_delta_pdb Table ..... 7-32
7.3-10 tlm_derived_pdb Table ..... 7-33
7.3-11 tlm_desc_pdb Table ..... 7-34
7.3-12 tlm_drvinput_pdb Table ..... 7-34
7.3-13 tlm_drvparm_pdb Table ..... 7-35
7.3-14 tlm_dstate_pdb Table ..... 7-35
7.3-15 tlm_lgdesc_pdb Table ..... 7-35
7.3-16 tlm_limsel_pdb Table ..... 7-36
7.3-17 tlm_lineconv_pdb Table ..... 7-36
7.3-18 tlm_mnem_rpt Table ..... 7-37
7.3-19 tlm_packet_pdb Table ..... 7-37
7.3-20 tlm_parm_pdb Table ..... 7-38
7.3-21 tlm_polyconv_pdb Table ..... 7-38
7.3-22 tlm_rylim_pdb Table ..... 7-39
7.3-23 tlm_val_log Table ..... 7-39
7.4-1 act_actcomponent_pst Table ..... 7-40
7.4-2 act_activity_pst Table ..... 7-41
7.4-3 act_alloc_pst Table ..... 7-41
7.4-4 act_asterdarids_pst Table ..... 7-42

7.4-5 act_bap_pst Table ..... 7-42
7.4-6 act_bapactref_pst Table ..... 7-42
7.4-7 act_commandparam_pst Table ..... 7-43
7.4-8 act_commbufnames_pst Table ..... 7-43
7.4-9 act_discretevalues_pst Table ..... 7-44
7.4-10 act_nccparams_pst Table ..... 7-44
7.4-11 act_schedinfo_pst Table ..... 7-44
7.4-12 act_timeinfo_pst Table ..... 7-46
7.4-13 ceresevent_pst Table ..... 7-46
7.4-14 cmd_funcparam_pst Table ..... 7-47
7.4-15 cmd_pstate_pdb Table ..... 7-47
7.4-16 idfact_act_pst Table ..... 7-47
7.4-17 idfact_alloc_pst Table ..... 7-48
7.4-18 idfact_bap_pst Table ..... 7-48
7.4-19 idfact_constraint_pst Table ..... 7-48
7.4-20 instr_tgt_sites Table ..... 7-48
7.4-21 mis_help_pst Table ..... 7-49
7.4-22 pln_access_pst Table ..... 7-49
7.4-23 pln_lock_pst Table ..... 7-49
7.4-24 pln_permission_pst Table ..... 7-50
7.4-25 pln_plan_pst Table ..... 7-50
7.4-26 pln_usergroup_pst Table ..... 7-50
7.4-27 res_actids_pst Table ..... 7-51
7.4-28 res_constraint Table ..... 7-51
7.4-29 res_eventtype_pst Table ..... 7-51
7.4-30 res_mode_pst Table ..... 7-52
7.4-31 res_resconn_pst Table ..... 7-52
7.4-32 res_resource_pst Table ..... 7-52
7.4-33 res_role_pst Table ..... 7-53

7.4-34 res_sresconn_pst Table ..... 7-53
7.4-35 res_sresource_pst Table ..... 7-53
7.4-36 res_state_pst Table ..... 7-54
7.4-37 res_violations_pst Table ..... 7-54
7.4-38 sns_register_pst Table ..... 7-55
7.4-39 targetevent_pst Table ..... 7-55
7.4-40 temp_instr_tgt_sites Table ..... 7-56
7.5-1 fdf_am1_range_data Table ..... 7-56
7.5-2 fdf_am1_range_data_hdr Table ..... 7-56
7.5-3 fdf_apg_altitude Table ..... 7-57
7.5-4 fdf_apg_altitude_hdr Table ..... 7-57
7.5-5 fdf_attitude Table ..... 7-57
7.5-6 fdf_attitude_hdr Table ..... 7-58
7.5-7 fdf_azm_moon_ceres Table ..... 7-58
7.5-8 fdf_azm_moon_ceres_hdr Table ..... 7-58
7.5-9 fdf_azm_moon_misr Table ..... 7-58
7.5-10 fdf_azm_moon_misr_hdr Table ..... 7-59
7.5-11 fdf_azm_moon_modis Table ..... 7-59
7.5-12 fdf_azm_moon_modis_hdr Table ..... 7-59
7.5-13 fdf_azm_moon_mopitt Table ..... 7-59
7.5-14 fdf_azm_moon_mopitt_hdr Table ..... 7-60
7.5-15 fdf_azm_sun_ceres Table ..... 7-60
7.5-16 fdf_azm_sun_ceres_hdr Table ..... 7-60
7.5-17 fdf_azm_sun_misr Table ..... 7-60
7.5-18 fdf_azm_sun_misr_hdr Table ..... 7-61
7.5-19 fdf_azm_sun_modis Table ..... 7-61
7.5-20 fdf_azm_sun_modis_hdr Table ..... 7-61
7.5-21 fdf_azm_sun_mopitt Table ..... 7-61
7.5-22 fdf_azm_sun_mopitt_hdr Table ..... 7-62

7.5-23 fdf_esa_sunmoon_int Table ..... 7-62
7.5-24 fdf_esa_sunmoon_hdr Table ..... 7-62
7.5-25 fdf_fss_vis Table ..... 7-62
7.5-26 fdf_fss_vis_hdr Table ..... 7-63
7.5-27 fdf_grd_stat_contimes Table ..... 7-63
7.5-28 fdf_grd_stat_contimes_hdr Table ..... 7-63
7.5-29 fdf_hga_gim_ang Table ..... 7-64
7.5-30 fdf_hga_gim_ang_hdr Table ..... 7-64
7.5-31 fdf_hga_view_times Table ..... 7-64
7.5-32 fdf_hga_view_times_hdr Table ..... 7-64
7.5-33 fdf_inst_orb_evnts Table ..... 7-65
7.5-34 fdf_inst_orb_evnt_hdr Table ..... 7-65
7.5-35 fdf_load_tab Table ..... 7-65
7.5-36 fdf_load_tab_hdr Table ..... 7-65
7.5-37 fdf_load_tab_num Table ..... 7-66
7.5-38 fdf_loc_sun_time Table ..... 7-66
7.5-39 fdf_loc_sun_time_hdr Table ..... 7-66
7.5-40 fdf_lun_beta_ang Table ..... 7-66
7.5-41 fdf_lun_beta_ang_hdr Table ..... 7-67
7.5-42 fdf_lun_sol_eclipse Table ..... 7-67
7.5-43 fdf_lun_sol_eclipse_hdr Table ..... 7-67
7.5-44 fdf_mcm_prod Table ..... 7-67
7.5-45 fdf_mcm_prod_hdr Table ..... 7-68
7.5-46 fdf_modis_fov_tar Table ..... 7-68
7.5-47 fdf_modis_fov_tar_hdr Table ..... 7-68
7.5-48 fdf_o2g_view_times Table ..... 7-68
7.5-49 fdf_o2g_view_times_hdr Table ..... 7-69
7.5-50 fdf_omni_view_times Table ..... 7-69
7.5-51 fdf_omni_tdrs_hdr Table ..... 7-69
7.5-52 fdf_orb_evnts Table ..... 7-69

7.5-53 fdf_orb_evnts_hdr Table ..... 7-70
7.5-54 fdf_orb_man_dataset Table ..... 7-70
7.5-55 fdf_orb_man_dataset_hdr Table ..... 7-70
7.5-56 fdf_orb_man_req Table ..... 7-70
7.5-57 fdf_orb_man_req_hdr Table ..... 7-71
7.5-58 fdf_orbnum_sttime Table ..... 7-71
7.5-59 fdf_orbnum_sttime_hdr Table ..... 7-71
7.5-60 fdf_oscilrpt Table ..... 7-71
7.5-61 fdf_oscilrpt_hdr Table ..... 7-72
7.5-62 fdf_pre_eos_am1_ephem Table ..... 7-72
7.5-63 fdf_pre_eos_am1_ephem_hdr Table ..... 7-73
7.5-64 fdf_pre_tdrs_ephem Table ..... 7-73
7.5-65 fdf_pre_tdrs_ephem_hdr Table ..... 7-73
7.5-66 fdf_ps_fov_evnts_misr Table ..... 7-74
7.5-67 fdf_ps_fov_evnts_misr_hdr Table ..... 7-74
7.5-68 fdf_ps_fov_evnts_modis Table ..... 7-74
7.5-69 fdf_ps_fov_evnts_modis_hdr Table ..... 7-74
7.5-70 fdf_sim_eos_am1_ephm Table ..... 7-75
7.5-71 fdf_sim_eos_am1_ephm_hdr Table ..... 7-75
7.5-72 fdf_sm_fov_evnts_misr Table ..... 7-75
7.5-73 fdf_sm_fov_evnts_misr_hdr Table ..... 7-76
7.5-74 fdf_sm_fov_evnts_modis Table ..... 7-76
7.5-75 fdf_sm_fov_evnts_modis_hdr Table ..... 7-76
7.5-76 fdf_sol_beta_ang Table ..... 7-76
7.5-77 fdf_sol_beta_ang_hdr Table ..... 7-77
7.5-78 fdf_spcrft_altitude Table ..... 7-77
7.5-79 fdf_spcrft_altitude_hdr Table ..... 7-77
7.5-80 fdf_spcrft_dn_len Table ..... 7-77
7.5-81 fdf_spcrft_dn_len_hdr Table ..... 7-78
7.5-82 fdf_ssst_star Table ..... 7-78

7.5-83 fdf_ssst_star_hdr Table ..... 7-78
7.5-84 fdf_star_den_prof Table ..... 7-78
7.5-85 fdf_star_den_hdr Table ..... 7-79
7.5-86 fdf_sub_sate_pt Table ..... 7-79
7.5-87 fdf_sub_sate_pt_hdr Table ..... 7-79
7.5-88 fdf_val_log Table ..... 7-79
7.5-89 fdf_xband_int_times Table ..... 7-80
7.5-90 fdf_xband_int_times_hdr Table ..... 7-80
7.6-1 activity_severity_fix Table ..... 7-80
7.6-2 cmdcon_pdb_fix Table ..... 7-80
7.6-3 cmd_type_cfx Table ..... 7-81
7.6-4 const_type_tfx Table ..... 7-81
7.6-5 conv_type_tfx Table ..... 7-82
7.6-6 data_rep_tfx Table ..... 7-82
7.6-7 derived_oper_tfx Table ..... 7-82
7.6-8 event_severity_fix Table ..... 7-83
7.6-9 file_loc_fix ..... 7-83
7.6-10 file_types_fix Table ..... 7-83
7.6-11 fos_sc_id Table ..... 7-85
7.6-12 fos_subsys_fix Table ..... 7-85
7.6-13 interface_fix Table ..... 7-85
7.6-14 parm_type_fix Table ..... 7-85
7.6-15 rt_name_cfx Table ..... 7-86
7.6-16 tbl_type_cfx Table ..... 7-86
7.6-17 unit_conv_fix Table ..... 7-87
7.6-18 unit_format_fix Table ..... 7-90
7.6-19 unit_type_fix Table ..... 7-94
7.6-20 value_type_cfx Table ..... 7-94

## Abbreviations and Acronyms

This page intentionally left blank.

# 1. Introduction

## 1.1 Identification

The contents of this document defines the database design and database schema for the Flight Operations Segment (FOS). Thus, this document addresses the Data Item Description (DID) for CDRL item 050 311/DV1 under contract NAS5-60000.

## 1.2 Scope

This document reflects the February 1996 Technical Baseline maintained by the contractor Configuration Control Board (CCB) in accordance with ECS Technical Direction No. 11 dated December 6, 1994.

## 1.3 Purpose

The FOS Database Design and Database Schema document provides the FOS Database schema detailed design.

## 1.4 Status and Schedule

This submittal of DID 311/DV1 incorporates the FOS detailed design performed during Release Readiness Review (RRR) time frame. This document is under the ECS Project configuration control.

## 1.5 Document Organization

This documents is organized as follows:

Section 1 provides information regarding the identification, scope, status, and organization of this document.

Section 2 provides a listing of the related documents, which were used as source information for this document.

Section 3 provides a FOS overview.

Section 4 provides a FOS Database overview.

Section 5 provides the FOS Database configuration control and operations concept.

Section 6 provides information about the FOS Database installation and initialization.

Section 7 describes the FOS Database schema.

Section 8 describes procedures for Sybase database backups.

The Appendix provides a matrix of all data managed by FOS and information about the data.

Abbreviations and acronyms contains an alphabetized list of the definitions for abbreviations and acronyms used within this design specification.

This page intentionally left blank.

# 2. Related Documentation

## 2.1 Parent Document

The parent documents are the documents from which this FOS Database Design and Database Schema's scope and content are derived.

| | |
|---|---|
| 194-207-SE1-001 | System Design Specification for the ECS Project |
| 209-CD-004-004 | Data Format Control Document for the Earth Observing System (EOS) AM-1 Project Data Base |
| 304-CD-001-003 | Flight Operations Segment (FOS) Requirements Specification for the ECS Project, Volume 1: General Requirements |
| 304-CD-004-003 | Flight Operations Segment (FOS) Requirements Specification for the ECS Project, Volume 2: AM-1 Mission Specific |

## 2.2 Applicable Documents

The following documents are referenced within this FOS document or are directly applicable, or contain policies or other directive matters that are binding upon the content of this document.

| | |
|---|---|
| 209-CD-002-004 | Interface Control Document Between EOSDIS Core System (ECS) and ASTER Ground Data System |
| 209-CD-025-003 | Interface Control Document Between ECS and AM-1 Project Spacecraft Software Development and Validation Facilities (SDVF) |
| 305-CD-040-002 | Flight Operations Segment (FOS ) Release B Design Specification for the ECS Project (Segment Level Volume) |
| 305-CD-041-002 | Flight Operations Segment (FOS ) Release B Design Specification for the ECS Project (Planning and Scheduling Volume) |
| 305-CD-042-002 | Flight Operations Segment (FOS ) Release B Design Specification for the ECS Project (Command Management Volume) |
| 305-CD-043-002 | Flight Operations Segment (FOS ) Release B Design Specification for the ECS Project (Resource Management Volume) |
| 305-CD-044-002 | Flight Operations Segment (FOS ) Release B Design Specification for the ECS Project (Telemetry Volume) |
| 305-CD-045-002 | Flight Operations Segment (FOS ) Release B Design Specification for the ECS Project (Command Volume) |

| | |
|---|---|
| 305-CD-046-002 | Flight Operations Segment (FOS ) Release B Design Specification for the ECS Project (Real-Time Contact Management Volume) |
| 305-CD-047-001 | Flight Operations Segment (FOS ) Analysis Design Specification for the ECS Project |
| 305-CD-048-002 | Flight Operations Segment (FOS ) Release B Design Specification for the ECS Project (FOS User Interface Volume) |
| 305-CD-049-002 | Flight Operations Segment (FOS ) Release B Design Specification for the ECS Project (Data Management Volume) |
| 502-ICD-JPL/GSFC | Goddard Space Flight Center/MO&DSD, Interface Control Document Between the Jet Propulsion Laboratory and the Goddard Space Flight Center for GSFC Missions Using the Deep Space Network |
| 505-41-21 | Goddard Space Flight Center, Interface Requirements Document between EOSDIS Core System (ECS) and NASA Institutional Support Systems (NISS) |
| 505-41-38 | Goddard Space Flight Center, Interface Control Document Between EOSDIS Core System (ECS) and the EOS-AM Project for AM-1 Spacecraft Analysis Software |
| 530-DFCD-NCCDS/POCC | Goddard Space Flight Center/MO&DSD, Data Format control Document Between the Goddard Space Flight Center Payload Operations Control Centers and the Network Control Center Data System |
| 530-ICD-NCCDS/MOC | Goddard Space Flight Center/MO&DSD, Interface Control Document Between the Goddard Space Flight Center Mission Operations Centers and the Network Control Center Data System |
| 530-ICD-NCCDS/POCC | Goddard Space Flight Center/MO&DSD, Interface Control Document Between the Goddard Space Flight Center Payload Operations Control Centers and the Network Control Center Data System |
| 540-041 | Goddard Space Flight Center, Interface Control Document (ICD) Between the Earth Observing System (EOS) Communications (Ecom) and the EOS Operations Center (EOC), Review |
| 552-FDD-96/01 ROUDO | Earth Observing System (EOS) AM-1 Flight Dynamics Division (FDD)/EOSDIS Core System (ECS) Interface Control Document (ICD) |
| 560-EDOS-0230.0001 | Goddard Space Flight Center/MO&DSD, Earth Observing System (EOS) Data and Operations System (EDOS) Data Format Requirements Document (DFRD) |

| | |
|---|---|
| 609-CD-005-003 | Flight Operations Segment (FOS) Operations Tools Manual for the ECS Project |
| IS20008658A | Martin Marietta Corporation, Interface Control Document (ICD-106) Data Format Control Book for EOS-AM Spacecraft |
| LIB02104.1 | Goddard Space Flight Center, Earth Observing System (EOS) AM-1 Flight Dynamics Facility (FDF) / EOS Operations Center (EOC) Interface Control Document |

## 2.3 Information Documents

The following documents are referenced herein and, amplify or clarify the information presented in this document. These documents are not binding on the content of this FOS Design Specification.

| | |
|---|---|
| 194-201-SE1-001 | Systems Engineering Plan for the ECS Project |
| 194-202-SE1-001 | Standards and Procedures for the ECS Project |
| 308-CD-001-004 | Software Development Plan for the ECS Project |
| 604-CD-001-004 | Operations Concept for the ECS Project: Part 1 -- ECS Overview |
| 604-CD-002-003 | Operations Concept for the ECS project: Part 2B -- ECS Release B, Annotated Outline |
| 604-CD-003-002 | Operations Concept for the ECS Project: Part 2A -- ECS Release A |
| 194-WP-912-001 | EOC/ICC Trade Study Report for the ECS Project, White Paper for the ECS Project |
| 194-WP-913-003 | User Environment Definition for the ECS Project, White Paper for the ECS Project |
| 194-WP-920-001 | An Evaluation of OASIS-CC for Use in the FOS, White Paper for the ECS Project |
| 193-208-SE1-001 | Methodology for Definition of External Interfaces for the ECS Project |
| 194-501-PA1-001 | Performance Assurance Implementation Plan for the ECS Project |
| 194-502-PA1-001 | Contractor's Practices & Procedures Referenced in the PAIP for the ECS Project |
| 194-TP-285-001 | ECS Glossary of Terms |
| 222-TP-003-006 | Release Plan Content Description, Technical Paper for the ECS Project |
| 560-EDOS-0211.0001 | Goddard Space Flight Center, Interface Requirements Document (IRD) Between the Earth Observing System (EOS) Data and Operations System (EDOS), and the EOS Ground System (EGS) Elements, Preliminary |

| | |
|---|---|
| NHB 2410.9A | NASA Hand Book: Security, Logistics and Industry Relations Division, NASA Security Office: Automated Information Security Handbook |
| none | Hughes Information Technology Company, Technical Proposal for the EOSDIS Core System (ECS), Best and Final Offer |

# 3. Flight Operations Segment (FOS) Overview

The Flight Operations Segment (FOS) provides the operations center for the U.S. EOS spacecraft and the U.S. EOS instruments, and coordinates mission operations for other non-U.S. EOS instruments on-board the U.S. spacecraft. The FOS supports the EOS mission life cycle, which includes supporting pre-launch, launch, and on-orbit operations that occur in parallel with operator simulations training as well as interface tests, system tests, and end-to-end tests. The FOS also supports concurrent operations with maintenance, system upgrades, and sustaining engineering activities. In addition, the FOS supports command, control, and analysis of multiple spacecraft and their instruments simultaneously.

The FOS will evolve during the EOS mission lifetime to accommodate changes in both the mission and mission operations center technology. To facilitate this evolution, the FOS system will use commercial protocols and standards, and will be developed with COTS where cost effective. The FOS will use automation where it increases productivity, reduces operations risk, and reduces life cycle costs. A modular design will enable technology advancements to be inserted, while improving system maintainability. The initial design presented in this document provides paths for evolving and scaling the Flight Operations Segment.

The FOS consists of two elements -- the EOS Operations Center (EOC) and the Instrument Support Toolkit (IST). The EOC will be located at Goddard Space Flight Center. It is responsible for the high-level monitoring and control of all instruments on-board the U.S. EOS spacecraft. It will maintain spacecraft and instrument health and safety, monitor spacecraft performance, perform spacecraft engineering analysis, perform high-level monitoring of the mission performance of the instruments, and provide periodic reports to document the operations of the spacecraft and instruments.

The IST is a software toolkit that will be delivered to the Principal Investigator/Team Leader (PI/TL) sites for U.S. EOS instruments. An IST provides access to the EOC functions for those individuals who are not physically located at the EOC. It enables PIs and TLs to participate in the planning, scheduling, commanding, monitoring, and analysis of their instruments.

Currently, all identified U.S. EOS instruments will be managed at the EOC with access provided to the PI/TL via the IST. If, in the future, a complex instrument requiring a dedicated facility for control and monitor functions is identified, the FOS design could be extended to accommodate an Instrument Control Center (ICC) without major redesign.

The FOS system design accommodates all of the requirements for monitoring and controlling the spacecraft and instruments that are assigned to ECS. Some functions may not be used for the first EOS spacecraft.

## 3.1 Flight Operations Segment Subsystems

The FOS design is based on allocating the level 4 FOS requirements defined in the FOS Requirements Specification to hardware, software, and operations. The FOS has been partitioned into nine distinct subsystems. These subsystems are Planning and Scheduling, Command

Management, Command, Telemetry, Resource Management, Real-Time Contact Management, Analysis, Data Management, and User Interface. Individually, these subsystems perform specific, unique functions; collectively, they provide a set of interrelated functions for the Flight Operations Team (FOT) and the IST user community.

An individual FOS subsystem does not consist of an integrated hardware and software component. Rather, the FOS hardware is a distributed system where multiple subsystems perform operational tasks on the same hardware unit. Thus, a subsystem, as defined for the FOS, consists of the software and operations associated with the performance of system requirements.

A summary description of the nine FOS subsystems is provided below:

a. **Planning and Scheduling:** The Planning and Scheduling Subsystem integrates plans and schedules for spacecraft, instruments, and ground operations. The Planning and Scheduling Subsystem provides the operational staff with a common set of capabilities to perform "what-if" analyses and to visualize plans and schedules.

b. **Command Management:** The Command Management Subsystem manages the preplanned command data for the spacecraft and instruments. Based on inputs received from the Planning and Scheduling Subsystem and the FOS User Interface (FUI), the Command Management Subsystem collects and validates the commands; generates software memory loads, tables loads, and instrument memory loads necessary to implement the instrument and spacecraft scheduled activities; and maintains memory models and ground reference images of Absolute Time Command (ATC), Relative Time Command Sequence (RTCS), and table loads.

c. **Command:** The Command Subsystem is responsible for transmitting command data (i.e., real-time commands or command loads) to EDOS for uplink to the spacecraft during each real-time contact. Command data can be received in real-time by the operational staff or as preplanned command groups generated by the Command Management Subsystem. The Command Subsystem is also responsible for verifying command execution on-board the spacecraft.

d. **Telemetry:** The Telemetry Subsystem receives and processes housekeeping telemetry (in CCSDS packets) from EDOS. After the packet decommutation, the telemetry data is converted to engineering units and checked against boundary limits.

e. **Analysis:** The Analysis Subsystem is responsible for managing the on-board systems and for the overall mission monitoring. Its functions include performance analysis and trend analysis. It also cooperates with the Telemetry Subsystem to support fault detection and isolation.

f. **Resource Management:** The Resource Management Subsystem provides the capability to manage and monitor the configuration of the EOC. This includes configuring the EOC resources for multi-mission support; facilitating operational failure recovery during real-time contacts.

g. **Real-Time Contact Management**: The Real-Time Contact Management Subsystem is responsible for managing the real-time interface with the NCC and EDOS, as well as with the DSN, as applicable.

h. **Data Management:** The Data Management Subsystem is responsible for managing data at the EOC. A FOS Database is utilized to support DMS functionality. The Project Database and the Flight Dynamics Division product data is processed in the FOS database to an operational state.

i. **User Interface:** The User Interface Subsystem provides character-based and graphical display interfaces for the FOS operators interacting with all of the aforementioned FOS subsystems.

This page intentionally left blank

# 4. FOS Database Overview

The Flight Operations Segment (FOS) is utilizing a Relational Database Management System (RDBMS) to store and process data at the EOC.

The FOS Database is comprised of three physical databases. Each of these databases represents the data in a different state. The three databases are created with the same SQL scripts and thus have the same format, the only difference being the database names. The format for the database names is as follows:

| | |
|---|---|
| <mission>_fos_unv | contains the unvalidated PDB/FDD data only |
| <mission>_fos_val | contains the validated PDB/FDD data only |
| <mission>_fos_ops | contains all operational data |

where <mission> represents the EOSDIS Mission the database supports (i.e., AM-1). The schema for the FOS Database is described in Section 7.

## 4.1 Unvalidated Database

The unvalidated database contains the Project Data Base (PDB) data and Flight Dynamics Division (FDD) product data. This data is loaded into the unvalidated database using a database load utility and is in an unvalidated state.

### 4.1.1 PDB Data

The PDB is made up of telemetry, command, activity, and constraint definitions. These definitions are initially provided by two sources: 1) the spacecraft manufacturer and 2) the Flight Operations Team (FOT) residing at the operations center.

The spacecraft manufacturer provides the telemetry and command definitions from their I&T database. The data is loaded into the FOS database through a FOS User Interface invoked by the Database Administrator (DBA). The document that governs the format of this data is the Data Format Control Document (DFCD) for the EOS FOS PDB.

The FOT (with DBA privileges) defines activity definitions, activity-level constraints, and command-level constraints through definer tools. Additional telemetry and command information not provided by the I&T database, but required for operations, such as limit sets, may also be defined. This edit capability is accessible through a FOS User Interface. All database edit screens were developed using HyperText Markup Language (HTML) and RogueWave DbTools.

### 4.1.2 FDD Data

The FDD data is automatically loaded into the unvalidated database upon receipt. The document that governs the format of this data is the EOS AM1-1 Flight Dynamics Division/EOSDIS Core System Interface Control Document.

## 4.2 Validated Database

The validated database contains PDB and FDD data produced as a result of the validation process and thus the data is said to be in a valid state. This data is dynamic and, therefore, unsuited for operations. The PDB validation is invoked from a FOS User Interface by the DBA. FDD product data validation is performed automatically after the data is loaded.

As the PDB and FDD data gets validated, valid data is copied into the validated database. Validation log tables reside in the validated database and all records not passing validation get logged. Stored procedures, trigger, and fixed tables used to support validation of both the PDB and FDD data are also stored in the validated database.

## 4.3 Operational Database

The operational database contains validated data in a static state that can be used to support FOS operations. The operational data generation process, which is invoked by the DBA from a FOS User Interface, copies the validated PDB and FDD product data from the validated database to the operational database. In addition to the PDB and FDD data, the operational database contains other data needed for operations. Metadata containing information about all files stored at the EOC, FOS events generated by the FOS software, and Name Server data used to coordinate FOS processes, are all stored within the operational database.

UNIX files are generated from data stored in the operational database and are used to support operations by various FOS subsystems. The UNIX files, called Operational Data Files (ODFs), are generated by the DBA from a FOS User Interface. The formats of the ODFs are outside of the scope of the FOS Database and thus are not described in this document.

Appendix A provides a matrix of all operational data managed by FOS and information about the data, such as the size, and whether the data is stored in the FOS Database and/or in a file. All files stored at the DMS have associated metadata in the FOS Database.

# 5. FOS Database Configuration Control and Operations Concept

## 5.1 Configuration Control

The Flight Operations Segment (FOS) Database is made up of different types of database users. These users have access to the database, dependent upon their needs, through database user accounts and privileges. These database user accounts, and the privileges associated with them, are what enforce configuration control over the database.

### 5.1.1 Database Administrator

One or more users is assigned the DBA role and thus performs database administrator duties. The DBA is responsible for the overall health of the database. The DBA can restrict database access through database privileges and can enforce security through auditing the database, if necessary. The DBA incorporates changes to the Project Data Base (PDB) that require approval by the Change Control Board (CCB) and monitors the database error logs frequently.

The DBA may also be responsible for performing database backups or may assign this role to a database operator. In addition, any database recovery required from database media failures is performed by the DBA.

### 5.1.2 Planners/Schedulers

The Planners/Schedulers, made up of FOT and Instrument Operations Team (IOT) personnel, use planning and scheduling tools to create and edit activities and activity-level constraints. When an activity, or an activity-level constraint, is created or edited, it resides under a test mode environment within the FOS Database. The activity may then be processed through to a timeline. Chosen activities and constraints are printed so that they may be reviewed by the CCB.

Once the activities and constraints have been approved by the CCB, they are moved to the operational mode environment within the FOS Database. The DBA performs this task by dumping the approved activities and constraints from the test mode environment and loading them into the operational mode environment. The planning and scheduling updates are then ready for the validation process.

This process of planning and scheduling data in a test mode environment versus operational mode environment is shown in Figure 5.1.2-1.

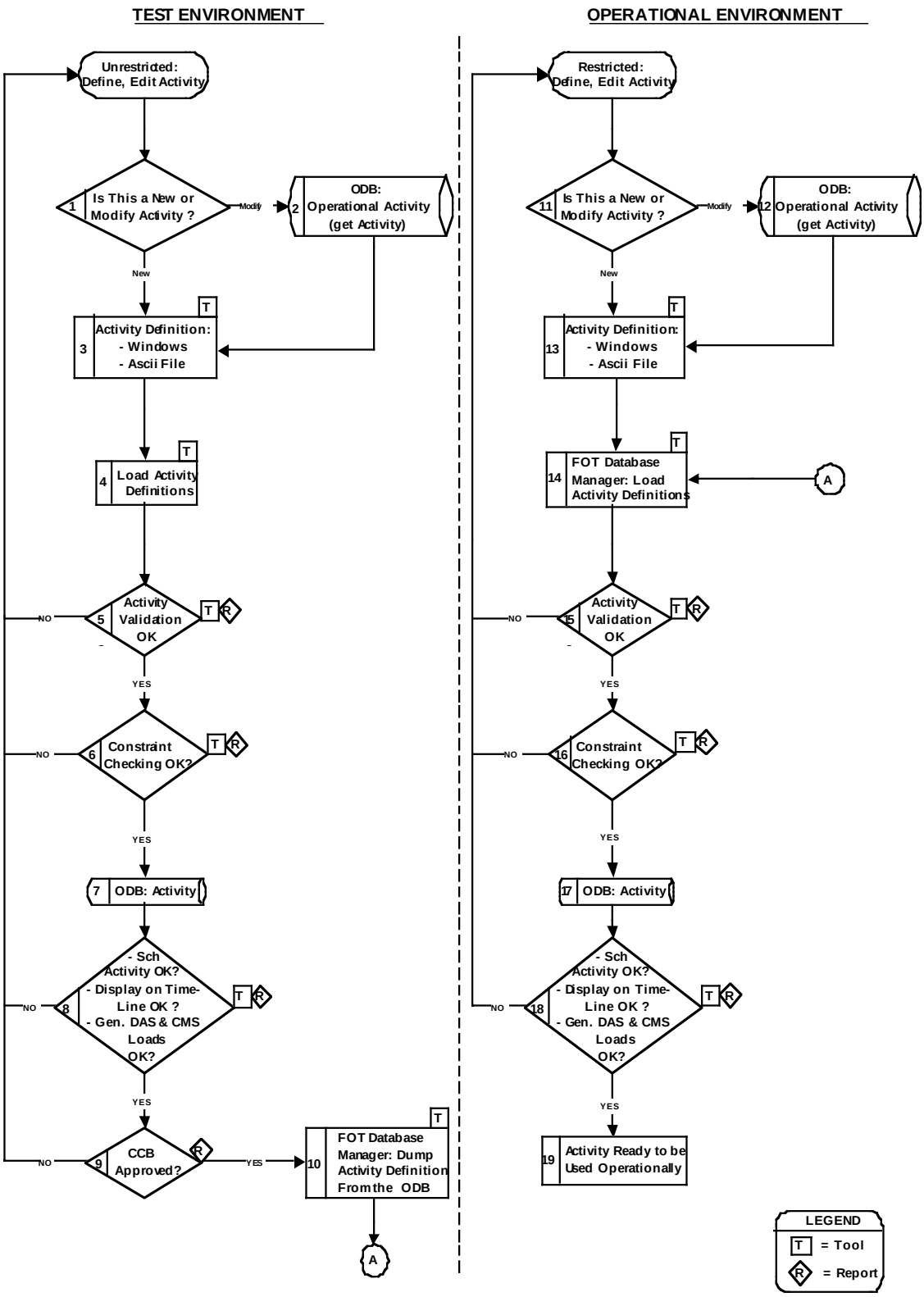


***Figure 5.1.2-1. Activity Updates to the PDB***

In addition to defining activities, the Instrument Operations Team (IOT), residing at various site locations, utilize a web browser to make updates to the instrument definitions in the PDB. These users are given privileges to make updates to the FOS Database only for their instruments. Changes made to the instrument definitions are stored in temporary tables until approved by the CCB, at which time the DBA loads updates into the unvalidated database. The IOT updates are then ready to be validated as part of the PDB.

This process of IOT updates to instrument data is shown in Figure 5.1.2-2.

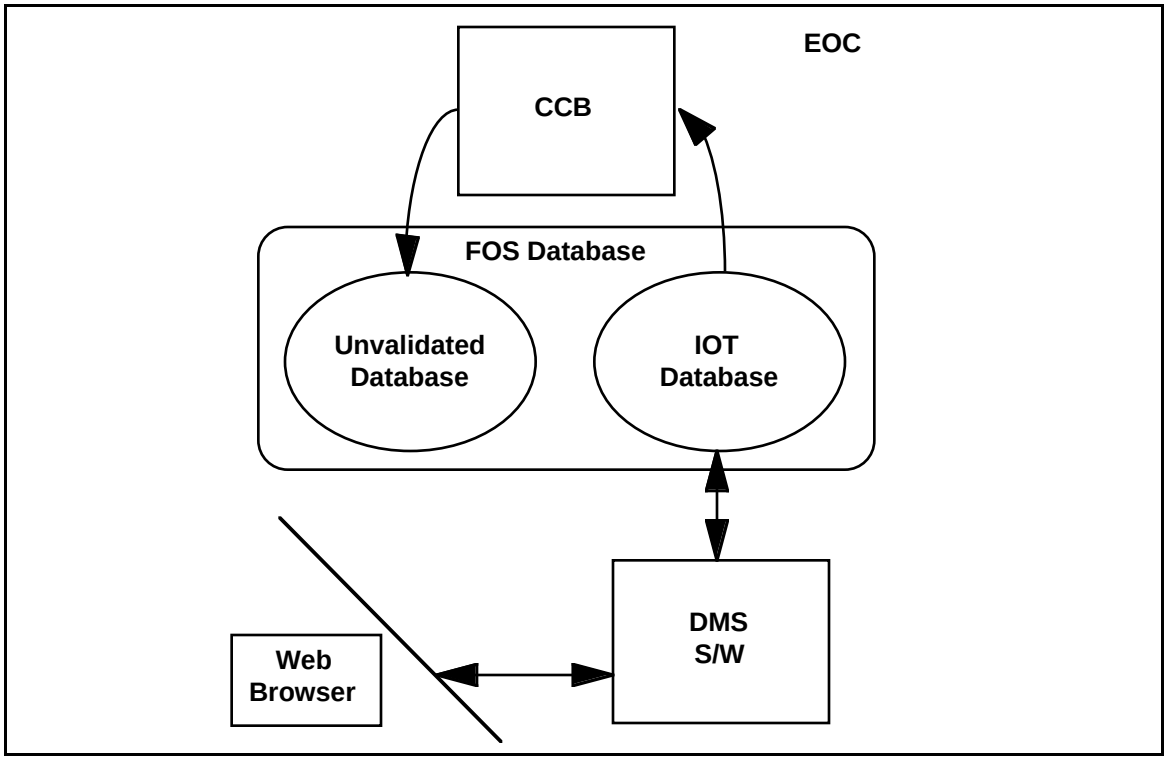


***Figure 5.1.2-2. IOT Updates to the PDB***

### 5.1.3 Change Control Board

A Change Control Board (CCB) is responsible for approving all changes to the PDB. Upon CCB approval, the DBA will incorporate updates into the operational PDB.

## 5.2 Operations Concept

Operationally, the FOS Database is accessed through the FOS software and through FOS User Interface screens. Figure 5.2-1 illustrates an overview of FOS Database processing at the EOC.

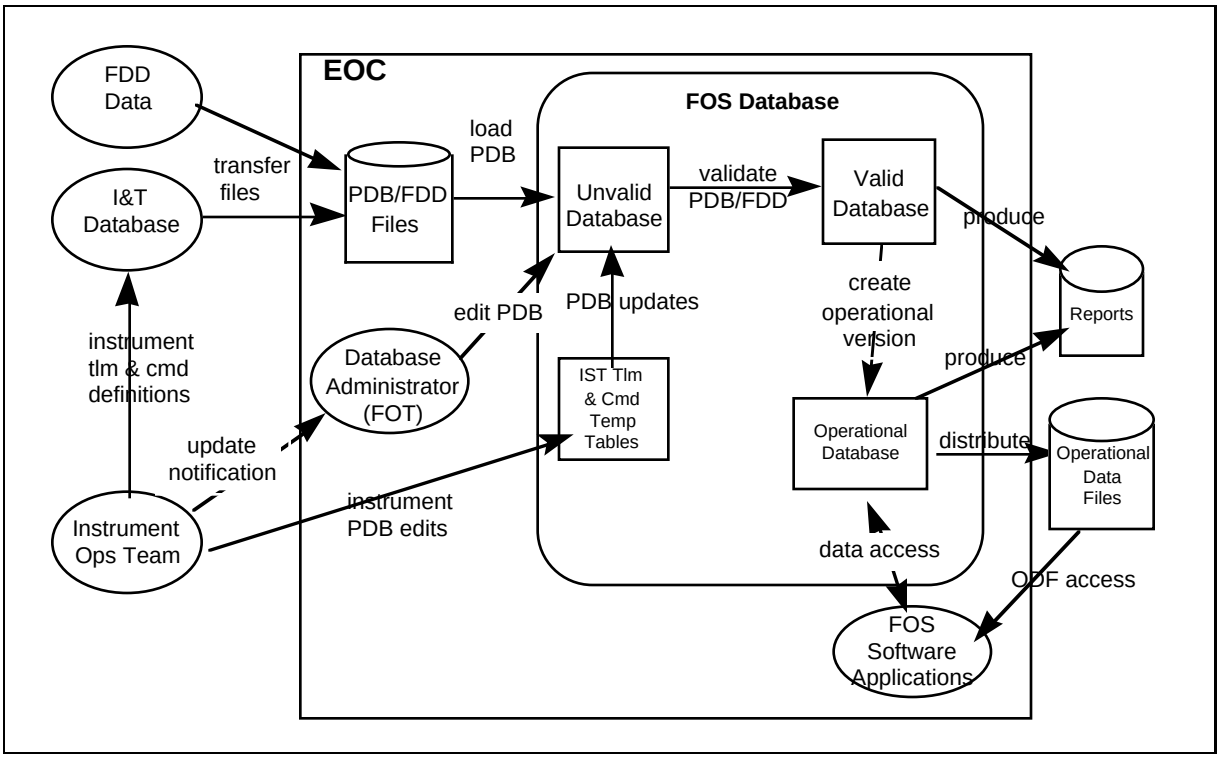


***Figure 5.2-1. FOS Database Processing***

The functionality provided through FOS User Interface screens is described below. For additional information on using these screens, refer to the FOS Operations Tools Manual for the ECS Project.

### 5.2.1 PDB Load

The PDB Load option is accessible only to the DBA and is selected to load 1) a new I&T database received from the spacecraft manufacturer, 2) activities added by Planners/Schedulers and approved by the CCB, or 3) IST updates approved by the CCB. The new definitions are loaded into the unvalidated PDB tables. Activity and constraint definitions are appended unless previously defined. A database utility is used to load the data.

The database table names for the PDB data coincide with the I&T file names specified in the DFCD. For example, a file named "tlm_packet_001.pdb" would be loaded into a table named "<mission-name>_fos_unv..tlm_packet_pdb". Note that in the PDB tables, an additional piece of information, a source field, is provided. It is the first field in each table, and it indicates where the data originated, and whether it's been modified. For example, when the I&T database is loaded, the source field is set to indicate a source of "I&T".

### 5.2.2 PDB Validation

The PDB Validation option is accessible only by the DBA and is selected to perform validation on the PDB. As validation occurs, database entries that pass validation become part of the validated PDB. The edit/validation process may occur several times before the PDB is in a state ready for operations. After the validation process is complete, a Validation Report may be generated and the operational data generation may be invoked from a FOS User Interface by the DBA.

### 5.2.3 Operational Data Generation

The Operational Data Generation option is accessible only by the DBA. This option copies the validated telemetry, command, activity, and command and activity-level constraint definitions from the validated database to the operational database. Reports are generated automatically during this process. The DBA then has the option to generate ODFs from the data in the operational database.

### 5.2.4 ODF Generation

The ODF generation option allows the DBA to generate the PDB operational data files needed for operations.

### 5.2.5 Database Access

The Database Edits option is accessible to users that have privilege to make edits to data in the FOS Database. This option invokes user-friendly screens developed using HTML and RogueWave DbTools.

### 5.2.6 Database Reports

The Database Reports option provides the capability to generate reports on data maintained in the FOS Database. These reports may be generated, viewed and printed. These reports were developed through a database reporting tool.

### 5.2.7 Database Backups

The Database Backups option is accessible only by the person given permission to perform database backups. This option invokes database backups so that a complete recovery can occur in the case of database corruption. Refer to Section 8 for additional information on database backups.

This page intentionally left blank.

# 6. FOS Database Installation and Initialization

## 6.1 Sybase Features

The FOS Database is built on top of the Sybase Relational Database product. The Sybase product provides several key features that ensure database integrity.

### 6.1.1 Sybase Installation

The Sybase database is installed using the Sybase "sybinit" installation program. This program performs the Sybase installation so that the database may be started and the FOS Database application may be built.

A master database is installed at the time of Sybase installation. This set of tables contain information for the overall configuration of the database server and all database objects associated with the server.

A model database is also installed at the time of Sybase installation. A copy of this standard set of tables is made each time a new database is created.

A transaction log is updated for all transactions that occur within the database. This log is used to perform a complete database recovery in the event of a media failure.

In addition to the SQL Server, a Backup Server is installed at database installation. These servers are always running simultaneously. The Backup Server performs all database backup transactions.

### 6.1.2 Sybase Table-Level Validation

At the table level, field validation is set up at table creation time. This field validation enforces field values and value ranges. In addition, constraints between table entries enforces integrity between tables.

### 6.1.3 Sybase Security

Database security is enforced through the use of user accounts and privileges. Users are given privileges to access and update tables according to their accounts. In addition, a database auditing feature is available to the DBA to monitor the activity on database objects.

## 6.2 FOS Database Initialization Scripts

The FOS Database objects (i.e., physical databases, user accounts, tables, stored procedures, and triggers) are created through UNIX scripts and database SQL scripts. The physical databases contain all objects used to support the FOS Database application. The user accounts provide access to the database and maintain access through privileges assigned to the accounts. Tables contain all data stored within the database. Stored procedures and triggers provide a method of accessing and manipulating the data stored in the tables.

### 6.2.1 Users

The FOS Database user accounts are created with UNIX/SQL scripts. These scripts create accounts for the Database Administrator (DBA) and the planners/schedulers. The DBA owns the FOS Database objects and thus has full privilege to those objects. The planners/schedulers are given privileges dependent upon their access needs.

### 6.2.2 Databases

The FOS Database physical databases are initiated with SQL scripts. A top-level UNIX script is invoked that invokes all the SQL scripts to create the database objects and the tables within those objects. The FOS databases are described in Section 4.

### 6.2.3 Tables

The FOS Database tables are created with SQL scripts. These SQL script names coincide with the table names, with the ".sql" suffix appended to the end of the script filename. The FOS Database tables are described in Section 7.

### 6.2.4 Stored Procedures

The FOS Database stored procedures are created with UNIX/SQL scripts. A top-level UNIX script is invoked that invokes all the SQL scripts to create the stored procedures. The stored procedures are primarily used to support the PDB and FDD product validation processing.

### 6.2.5 Triggers

The FOS Database triggers are created with SQL scripts. The triggers are invoked through inserts, updates, and deletes to the FOS Database tables. The triggers are primarily used to support the PDB and FDD product validation processing.

# 7. FOS Database Schema

Tables 7-1 through 7-5 identify the location of each of the FOS database tables described in this section.

In Sections 7.1 through 7.5 the table descriptions are grouped by table type - Operational, Command, Telemetry, Planning and Scheduling, and FDF Product. These sections provide a description of each table and list the column names as well as field data types, sizes, and whether the field is mandatory or a primary key. Section 7.6 provides the location for the data values of all FOS Database fixed tables. Fixed tables contain primarily static data to support operations.

***Table 7-1. FOS Operational Database Tables (1 of 2)***

| Table Number | Table Name | Unvalidated Database | Validated Database | Operational Database |
|---|---|---|---|---|
| 7.1-1 | activity_severity_fix | | | X |
| 7.1-2 | cmd_fixdata_pdb | X | X | X |
| 7.1-3 | event_severity_fix | | X | X |
| 7.1-4 | file_loc_fix | | | X |
| 7.1-5 | file_meta | | | X |
| 7.1-6 | file_types_fix | | X | X |
| 7.1-7 | fos_activity_archive | | | X |
| 7.1-8 | fos_activity_log | | | X |
| 7.1-9 | fos_dir_table | | | X |
| 7.1-10 | fos_event_archive | | | X |
| 7.1-11 | fos_events | | | X |
| 7.1-12 | fos_file_table | | | X |
| 7.1-13 | fos_linklist_cat | | | X |
| 7.1-14 | fos_load_cat | | | X |
| 7.1-15 | fos_pids | | X | X |
| 7.1-16 | fos_request_queue | | | X |
| 7.1-17 | fos_rms_role | | | X |
| 7.1-18 | fos_sc_id | | X | |
| 7.1-19 | fos_scheduptime_cat | | | X |
| 7.1-20 | fos_string_table | | | X |
| 7.1-21 | fos_subsys_fix | | X | X |
| 7.1-22 | fos_system_parms | | X | X |
| 7.1-23 | fos_uplinkinfo_cat | | | X |
| 7.1-24 | ground_discretes | | | X |
| 7.1-25 | interface_fix | | X | X |
| 7.1-26 | name_srvr | | | X |

*Table 7-1. FOS Operational Database Tables (2 of 2)*

| Table Number | Table Name | Unvalidated Database | Validated Database | Operational Database |
|---|---|---|---|---|
| 7.1-27 | odb_version | | | X |
| 7.1-28 | odf_table | | | X |
| 7.1-29 | packet_defs | | X | X |
| 7.1-30 | packet_types | | X | X |
| 7.1-31 | parm_type_fix | | X | X |
| 7.1-32 | unit_conv_fix | | X | |
| 7.1-33 | unit_format_fix | | X | X |
| 7.1-34 | unit_type_fix | | X | X |
| 7.1-35 | user_auth | | | X |
| 7.1-36 | user_roles | | | X |

*Table 7-2. FOS Command Database Tables (1 of 2)*

| Table Number | Table Name | Unvalidated Database | Validated Database | Operational Database |
|---|---|---|---|---|
| 7.2-1 | cmd_desc_pdb | X | X | X |
| 7.2-2 | cmd_dump | | | X |
| 7.2-3 | cmd_fixdata_pdb | X | X | X |
| 7.2-4 | cmd_flddef_pdb | X | X | X |
| 7.2-5 | cmd_lgdesc_pdb | X | X | X |
| 7.2-6 | cmd_maskgrp_pdb | X | X | X |
| 7.2-7 | cmd_mmask_pdb | X | X | X |
| 7.2-8 | cmd_mnem_rpt | | | X |
| 7.2-9 | cmd_parm_pdb | X | X | X |
| 7.2-10 | cmd_pstate_pdb | X | X | X |
| 7.2-11 | cmd_tbldef_pdb | X | X | X |
| 7.2-12 | cmd_type_cfx | | X | X |
| 7.2-13 | cmd_user_auth | X | X | X |
| 7.2-14 | cmd_ustat_auth | X | X | X |
| 7.2-15 | cmd_val_log | | X | |
| 7.2-16 | cmd_vardata_pdb | X | X | X |
| 7.2-17 | cmd_verify_pdb | X | X | X |
| 7.2-18 | cmdcon_pdb_fix | X | X | X |
| 7.2-19 | con_bitrule_pdb | X | X | X |
| 7.2-20 | con_comrule_pdb | X | X | X |
| 7.2-21 | con_noexistrule_pdb | X | X | X |
| 7.2-22 | con_offsetrule_pdb | X | X | X |

*Table 7-2. FOS Command Database Tables (2 of 2)*

| Table Number | Table Name | Unvalidated Database | Validated Database | Operational Database |
|---|---|---|---|---|
| 7.2-23 | con_postrule_pdb | X | X | X |
| 7.2-24 | con_prerule_pdb | X | X | X |
| 7.2-25 | con_scalarrule_pdb | X | X | X |
| 7.2-26 | con_subfield_pdb | X | X | X |
| 7.2-27 | con_subfldbit_pdb | X | X | X |
| 7.2-28 | con_val_log | | X | |
| 7.2-29 | rt_name_cfx | | X | |
| 7.2-30 | tbl_type_cfx | | X | |
| 7.2-31 | value_type_cfx | | X | |

*Table 7-3. FOS Telemetry Database Tables*

| Table Number | Table Name | Unvalidated Database | Validated Database | Operational Database |
|---|---|---|---|---|
| 7.3-1 | const_type_tfx | | X | |
| 7.3-2 | conv_type_tfx | | X | |
| 7.3-3 | data_rep_tfx | | X | |
| 7.3-4 | derived_oper_tfx | | X | |
| 7.3-5 | tlm_calcurve_pdb | X | X | X |
| 7.3-6 | tlm_cata | | | X |
| 7.3-7 | tlm_constant_pdb | X | X | X |
| 7.3-8 | tlm_context_pdb | X | X | X |
| 7.3-9 | tlm_delta_pdb | X | X | X |
| 7.3-10 | tlm_derived_pdb | X | X | X |
| 7.3-11 | tlm_desc_pdb | X | X | X |
| 7.3-12 | tlm_drvinput_pdb | X | X | X |
| 7.3-13 | tlm_drvparm_pdb | X | X | X |
| 7.3-14 | tlm_dstate_pdb | X | X | X |
| 7.3-15 | tlm_lgdesc_pdb | X | X | X |
| 7.3-16 | tlm_limsel_pdb | X | X | X |
| 7.3-17 | tlm_lineconv_pdb | X | X | X |
| 7.3-18 | tlm_mnem_rpt | | | X |
| 7.3-19 | tlm_packet_pdb | X | X | X |
| 7.3-20 | tlm_parm_pdb | X | X | X |
| 7.3-21 | tlm_polyconv_pdb | X | X | X |
| 7.3-22 | tlm_rylim_pdb | X | X | X |
| 7.3-23 | tlm_val_log | X | X | X |

*Table 7-4. FOS Planning and Scheduling Database Tables*

| Table Number | Table Name | Unvalidated Database | Validated Database | Operational Database |
|---|---|---|---|---|
| 7.4-1 | act_actcomponent_pst | X | X | X |
| 7.4-2 | act_activity_pst | X | X | X |
| 7.4-3 | act_alloc_pst | X | X | X |
| 7.4-4 | act_asterdarids_pst | X | X | X |
| 7.4-5 | act_bap_pst | X | X | X |
| 7.4-6 | act_bapactref_pst | X | X | X |
| 7.4-7 | act_commandparam_pst | X | X | X |
| 7.4-8 | act_commbufnames_pst | X | X | X |
| 7.4-9 | act_discretevalues_pst | X | X | X |
| 7.4-10 | act_nccparams_pst | X | X | X |
| 7.4-11 | act_schedinfo_pst | X | X | X |
| 7.4-12 | act_timeinfo_pst | X | X | X |
| 7.4-13 | ceresevent_pst | X | X | X |
| 7.4-14 | cmd_funcparam_pst | X | X | X |
| 7.4-15 | cmd_pstate_pdb | X | X | X |
| 7.4-16 | idfact_act_pst | X | X | X |
| 7.4-17 | idfact_alloc_pst | X | X | X |
| 7.4-18 | idfact_bap_pst | X | X | X |
| 7.4-19 | idfact_constraint_pst | X | X | X |
| 7.4-20 | instr_tgt_sites | X | X | X |
| 7.4-21 | mis_help_pst | X | X | X |
| 7.4-22 | pln_access_pst | X | X | X |
| 7.4-23 | pln_lock_pst | X | X | X |
| 7.4-24 | pln_permission_pst | X | X | X |
| 7.4-25 | pln_plan_pst | X | X | X |
| 7.4-26 | pln_usergroup_pst | X | X | X |
| 7.4-27 | res_actids_pst | X | X | X |
| 7.4-28 | res_constraint_pst | X | X | X |
| 7.4-29 | res_eventtype_pst | X | X | X |
| 7.4-30 | res_mode_pst | X | X | X |
| 7.4-31 | res_resconn_pst | X | X | X |
| 7.4-32 | res_resource_pst | X | X | X |
| 7.4-33 | res_role_pst | X | X | X |
| 7.4-34 | res_sresconn_pst | X | X | X |
| 7.4-35 | res_sresource_pst | X | X | X |
| 7.4-36 | res_state_pst | X | X | X |
| 7.4-37 | res_violations_pst | X | X | X |
| 7.4-38 | sns_register_pst | X | X | X |
| 7.4-39 | targetevent_pst | X | X | X |
| 7.4-40 | temp_instr_tgt_sites | X | X | X |

*Table 7-5. FOS FDF Products Database Tables (1 of 3)*

| Table Number | Table Name | Unvalidated Database | Validated Database | Operational Database |
|---|---|---|---|---|
| 7.5-1 | fdf_am1_range_data | X | X | X |
| 7.5-2 | fdf_am1_range_data_hdr | X | X | X |
| 7.5-3 | fdf_apg_altitude | X | X | X |
| 7.5-4 | fdf_apg_altitude_hdr | X | X | X |
| 7.5-5 | fdf_attitude | X | X | X |
| 7.5-6 | fdf_attitude_hdr | X | X | X |
| 7.5-7 | fdf_azm_moon_ceres | X | X | X |
| 7.5-8 | fdf_azm_moon_ceres_hdr | X | X | X |
| 7.5-9 | fdf_azm_moon_misr | X | X | X |
| 7.5-10 | fdf_azm_moon_misr_hdr | X | X | X |
| 7.5-11 | fdf_azm_moon_modis | X | X | X |
| 7.5-12 | fdf_azm_moon_modis_hdr | X | X | X |
| 7.5-13 | fdf_azm_moon_mopitt | X | X | X |
| 7.5-14 | fdf_azm_moon_mopitt_hdr | X | X | X |
| 7.5-15 | fdf_azm_sun_ceres | X | X | X |
| 7.5-16 | fdf_azm_sun_ceres_hdr | X | X | X |
| 7.5-17 | fdf_azm_sun_misr | X | X | X |
| 7.5-18 | fdf_azm_sun_misr_hdr | X | X | X |
| 7.5-19 | fdf_azm_sun_modis | X | X | X |
| 7.5-20 | fdf_azm_sun_modis_hdr | X | X | X |
| 7.5-21 | fdf_azm_sun_mopitt | X | X | X |
| 7.5-22 | fdf_azm_sun_mopitt_hdr | X | X | X |
| 7.5-23 | fdf_esa_sunmoon_int | X | X | X |
| 7.5-24 | fdf_esa_sunmoon_hdr | X | X | X |
| 7.5-25 | fdf_fss_vis | X | X | X |
| 7.5-26 | fdf_fss_vis_hdr | X | X | X |
| 7.5-27 | fdf_grd_stat_contimes | X | X | X |
| 7.5-28 | fdf_grd_stat_contimes_hdr | X | X | X |
| 7.5-29 | fdf_hga_gim_ang | X | X | X |
| 7.5-30 | fdf_hga_gim_ang_hdr | X | X | X |
| 7.5-31 | fdf_hga_view_times | X | X | X |
| 7.5-32 | fdf_hga_view_times_hdr | X | X | X |
| 7.5-33 | fdf_inst_orb_evnts | X | X | X |
| 7.5-34 | fdf_inst_orb_evnt_hdr | X | X | X |
| 7.5-35 | fdf_load_tab | X | X | X |
| 7.5-36 | fdf_load_tab_hdr | X | X | X |
| 7.5-37 | fdf_load_tab_num | X | X | X |
| 7.5-38 | fdf_loc_sun_time | X | X | X |
| 7.5-39 | fdf_loc_sun_time_hdr | X | X | X |
| 7.5-40 | fdf_lun_beta_ang | X | X | X |

*Table 7-5. FOS FDF Products Database Tables (2 of 3)*

| Table Number | Table Name | Unvalidated Database | Validated Database | Operational Database |
|---|---|---|---|---|
| 7.5-41 | fdf_lun_beta_ang_hdr | X | X | X |
| 7.5-42 | fdf_lun_sol_eclipse | X | X | X |
| 7.5-43 | fdf_lun_sol_eclipse_hdr | X | X | X |
| 7.5-44 | fdf_mcm_prod | X | X | X |
| 7.5-45 | fdf_mcm_prod_hdr | X | X | X |
| 7.5-46 | fdf_modis_fov_tar | X | X | X |
| 7.5-47 | fdf_modis_fov_tar_hdr | X | X | X |
| 7.5-48 | fdf_o2g_view_times | X | X | X |
| 7.5-49 | fdf_o2g_view_times_hdr | X | X | X |
| 7.5-50 | fdf_omni_view_times | X | X | X |
| 7.5-51 | fdf_omni_tdrs_hdr | X | X | X |
| 7.5-52 | fdf_orb_evnts | X | X | X |
| 7.5-53 | fdf_orb_evnts_hdr | X | X | X |
| 7.5-54 | fdf_orb_man_dataset | X | X | X |
| 7.5-55 | fdf_orb_man_dataset_hdr | X | X | X |
| 7.5-56 | fdf_orb_man_req | X | X | X |
| 7.5-57 | fdf_orb_man_req_hdr | X | X | X |
| 7.5-58 | fdf_orbnum_sttime | X | X | X |
| 7.5-59 | fdf_orbnum_sttime_hdr | X | X | X |
| 7.5-60 | fdf_oscilrpt | X | X | X |
| 7.5-61 | fdf_oscilrpt_hdr | X | X | X |
| 7.5-62 | fdf_pre_eos_am1_ephem | X | X | X |
| 7.5-63 | fdf_pre_eos_am1_ephem_hdr | X | X | X |
| 7.5-64 | fdf_pre_tdrs_ephem | X | X | X |
| 7.5-65 | fdf_pre_tdrs_ephem_hdr | X | X | X |
| 7.5-66 | fdf_ps_fov_evnts_misr | X | X | X |
| 7.5-67 | fdf_ps_fov_evnts_misr_hdr | X | X | X |
| 7.5-68 | fdf_ps_fov_evnts_modis | X | X | X |
| 7.5-69 | fdf_ps_fov_evnts_modis_hdr | X | X | X |
| 7.5-70 | fdf_sim_eos_am1_ephm | X | X | X |
| 7.5-71 | fdf_sim_eos_am1_ephm_hdr | X | X | X |
| 7.5-72 | fdf_sm_fov_evnts_misr | X | X | X |
| 7.5-73 | fdf_sm_fov_evnts_misr_hdr | X | X | X |
| 7.5-74 | fdf_sm_fov_evnts_modis | X | X | X |
| 7.5-75 | fdf_sm_fov_evnts_modis_hdr | X | X | X |
| 7.5-76 | fdf_sol_beta_ang | X | X | X |
| 7.5-77 | fdf_sol_beta_ang_hdr | X | X | X |

*Table 7-5. FOS FDF Products Database Tables (3 of 3)*

| Table Number | Table Name | Unvalidated Database | Validated Database | Operational Database |
|---|---|---|---|---|
| 7.5-78 | fdf_spcrft_altitude | X | X | X |
| 7.5-79 | fdf_spcrft_altitude_hdr | X | X | X |
| 7.5-80 | fdf_spcrft_dn_len | X | X | X |
| 7.5-81 | fdf_spcrft_dn_len_hdr | X | X | X |
| 7.5-82 | fdf_ssst_star | X | X | X |
| 7.5-83 | fdf_ssst_star_hdr | X | X | X |
| 7.5-84 | fdf_star_den_prof | X | X | X |
| 7.5-85 | fdf_star_den_hdr | X | X | X |
| 7.5-86 | fdf_sub_sate_pt | X | X | X |
| 7.5-87 | fdf_sub_sate_pt_hdr | X | X | X |
| 7.5-88 | fdf_val_log | | X | |
| 7.5-89 | fdf_xband_int_times | X | X | X |
| 7.5-90 | fdf_xband_int_times_hdr | X | X | X |

The column names of fields in the Fixed Tables listed below are included in Sections 7.1 through 7.5 by table type - Operational, Command, Telemetry, Planning and Scheduling, and FDF Product.

*Table 7-6. Fixed Tables*

| Table Number | Table Name |
|---|---|
| 7.6-1 | activity_severity_fix |
| 7.6-2 | cmdcon_pdb_fix |
| 7.6-3 | cmd_type_cfx |
| 7.6-4 | const_type_tfx |
| 7.6-5 | conv_type_tfx |
| 7.6-6 | data_rep_tfx |
| 7.6-7 | derived_oper_tfx |
| 7.6-8 | event_severity_fix |
| 7.6-9 | file_loc_fix |
| 7.6-10 | file_types_fix |
| 7.6-11 | fos_sc_id |
| 7.6-12 | fos_subsys_fix |
| 7.6-13 | interface_fix |
| 7.6-14 | parm_type_fix |
| 7.6-15 | rt_name_cfx |
| 7.6-16 | tbl_type_cfx |
| 7.6-17 | unit_conv_fix |
| 7.6-18 | unit_format_fix |
| 7.6-19 | unit_type_fix |
| 7.6-20 | value_type_cfx |

## 7.1 Operational Tables

The Activity Log Severity Fixed Table contains the event severity IDs and associated descriptions. Refer to Table 7.6-1 for a list of the values stored in the table.

***Table 7.1-1. activity_severity_fix Table***

| Column Name | Type | Primary Key | Mandatory |
|---|---|---|---|
| severity_desc | varchar(13) | No | No |
| severity_id | numeric(1) | Yes | Yes |

The Command Fixed Data PDB Table defines the data word (1-N) associated with the fixed bit pattern of a command. Word 1 would represent the command destination and word 2 represents the command descriptor.

***Table 7.1-2. cmd_fixdata_pdb Table***

| Column Name | Type | Primary Key | Mandatory |
|---|---|---|---|
| cmd_mnem | varchar(20) | No | Yes |
| cmd_pid | numeric(5) | No | Yes |
| data_value | varchar(4) | No | Yes |
| fdata_pdbsrc | char(3) | No | No |
| wrd_num | numeric(2) | No | Yes |

The Event Severity Fixed Table contains the event severity IDs and associated descriptions. Refer to Table 7.6-8 for a list of the values stored in the table.

***Table 7.1-3. event_severity_fix Table***

| Column Name | Type | Primary Key | Mandatory |
|---|---|---|---|
| severity_desc | varchar(13) | No | No |
| severity_id | numeric(1) | Yes | Yes |

The File Location Fixed Table contains location information for files residing at the EOC and the Long-Term Archive. Refer to Table 7.6-9 for a list of the values stored in the table.

***Table 7.1-4. file_loc_fix Table***

| Column Name | Type | Primary Key | Mandatory |
|---|---|---|---|
| description | varchar(9) | No | Yes |
| location_id | numeric(1) | Yes | Yes |

The File Metadata Table provides descriptive information about all files residing at the EOC and the Long-Term Archive.

***Table 7.1-5. file_meta Table***

| Column Name | Type | Primary Key | Mandatory |
|---|---|---|---|
| file_name | char(60) | Yes | Yes |
| file_time | float | No | No |
| file_type | numeric(2) | No | Yes |
| location | numeric(1) | No | Yes |
| owner | numeric(2) | No | No |
| ur_id | numeric(8) | No | No |
| user_id | char(20) | No | No |

The File Types Fixed Table provides the location (path) for each file type. These paths will be downloaded to the FileMetaSrv to be used for Store and Retrieve File functions. Refer to Table 7.6-10 for a list of the values stored in the table.

***Table 7.1-6. file_types_fix Table***

| Column Name | Type | Primary Key | Mandatory |
|---|---|---|---|
| duration | int | No | No |
| path | varchar(30) | No | Yes |
| types | int | Yes | Yes |

The FOS Activity Log Archive Table contains the formatted spacecraft activities.

***Table 7.1-7. fos_activity_archive Table***

| Column Name | Type | Primary Key | Mandatory |
|---|---|---|---|
| activity_id | int | No | No |
| archive_time | float | No | No |
| cycle_id | int | No | No |
| data_source | int | No | No |
| log_position | int | No | No |
| message | varchar(128) | No | No |

The FOS Activity Log Table contains the activity definitions for all subsystem activities in FOS.

***Table 7.1-8. fos_activity_log Table***

| Column Name | Type | Primary Key | Mandatory |
|---|---|---|---|
| activity_id | numeric(4) | Yes | Yes |
| activity_message | varchar(128) | No | Yes |
| severity | numeric(1) | No | No |

The FOS Directories Table specifies the directories into which external processes will ftp files needed by the FOS.

***Table 7.1-9. fos_dir_table Table***

| Column Name | Type | Primary Key | Mandatory |
|---|---|---|---|
| directory_path | varchar(100) | Yes | Yes |
| source | varchar(20) | No | Yes |

The FOS Event Archive Table contains the formatted events generated by the FOS software.

***Table 7.1-10. fos_event_archive Table***

| Column Name | Type | Primary Key | Mandatory |
|---|---|---|---|
| archive_time | float | No | No |
| event_id | int | No | No |
| event_type | int | No | No |
| file | varchar(50) | No | No |
| line_number | int | No | No |
| local_flag | int | No | No |
| message | varchar(128) | No | No |
| mode | int | No | No |
| node | varchar(10) | No | No |
| sc_id | varchar(4) | No | No |
| sc_time | float | No | No |
| severity | int | No | No |
| string_id | int | No | No |
| subsystem | int | No | No |
| tr_procedure | varchar(20) | No | No |

The FOS Events Table contains the event definitions for all subsystem events in the FOS.

***Table 7.1-11. fos_events Table***

| Column Name | Type | Primary Key | Mandatory |
|---|---|---|---|
| back_text | varchar(128) | No | No |
| ev_trigger | varchar(30) | No | No |
| event_id | numeric(4) | No | No |
| event_name | varchar(30) | Yes | Yes |
| event_type | numeric(2) | No | No |
| proc_route | varchar(128) | No | No |
| severity | numeric(1) | No | No |

The FOS Files Table specifies the filenames which the FOS is expecting to receive via FTP from external processes.

***Table 7.1-12. fos_file_table Table***

| Column Name | Type | Primary Key | Mandatory |
|---|---|---|---|
| action_code | int | No | No |
| directory_path | varchar(100) | No | No |
| event | int | No | No |
| file_name | varchar(50) | No | No |
| filemeta_code | int | No | No |
| ftp_dest | varchar(25) | No | No |
| script | varchar(50) | No | No |

The FOS Link List Catalog Table provides information about RTS table loads.

***Table 7.1-13. fos_linklist_cat Table***

| Column Name | Type | Primary Key | Mandatory |
|---|---|---|---|
| load_name | char(48) | No | Yes |
| num_links | int | No | No |

The FOS Load Catalog Table provides information about CMS table loads.

***Table 7.1-14. fos_load_cat Table***

| Column Name | Type | Primary Key | Mandatory |
|---|---|---|---|
| load_name | char(48) | No | Yes |
| dest | char(80) | No | No |
| load_size | int | No | No |
| user_id | char(20) | No | No |
| owner | char(20) | No | No |
| sc_id | char(80) | No | No |
| uplink_time | real | No | No |
| val_start_time | real | No | No |
| val_stop_time | real | No | No |
| db_id | int | No | No |
| load_val_1 | int | No | No |
| load_val_2 | int | No | No |
| load_val_3 | int | No | No |
| table_name | char(16) | No | No |

The FOS PIDs Table provides a description of all mnemonics in the FOS Database. Note that the fos_pid column exists only in the am1_fos_ops database.

***Table 7.1-15. fos_pids Table***

| Column Name | Type | Primary Key | Mandatory |
|---|---|---|---|
| active_flag | char(1) | No | No |
| descriptor | varchar(10) | No | No |
| external_fmt | numeric(3) | No | No |
| fos_pid | int | No | No |
| internal_fmt | numeric(3) | No | No |
| mnemonic | varchar(20) | Yes | Yes |
| parm_type | char(2) | No | No |
| pdb_pid | numeric(5) | No | No |
| sign_figures | numeric(2) | No | No |
| source | numeric(2) | No | No |
| stats_flag | char(1) | No | No |
| unit_type | numeric(2) | No | No |

The FOS Request Queue Table contains information about analysis and replay requests which have been submitted.

***Table 7.1-16. fos_request_queue Table***

| Column Name | Type | Primary Key | Mandatory |
|---|---|---|---|
| currentstring | varchar(10) | No | No |
| execmach | varchar(30) | No | No |
| farmflag | int | No | No |
| filename | varchar(128) | No | No |
| hostname | varchar(30) | No | No |
| percentcomp | float | No | No |
| priority | int | No | No |
| rate | float | No | No |
| requestid | int | Yes | Yes |
| requesttime | float | No | No |
| requesttype | int | No | No |
| scid | int | No | No |
| starttime | float | No | No |
| status | int | No | No |
| stoptime | float | No | No |
| username | varchar(60) | No | No |

The FOS RMS Role Table defines the roles associated with each workstation and indicates whether the station is a real-time server.

***Table 7.1-17. fos_rms_role Table***

| Column Name | Type | Primary Key | Mandatory |
|---|---|---|---|
| host_name | char(15) | No | No |
| host_role | numeric(1) | No | No |

The FOS Spacecraft ID Fixed Table provides a list of valid spacecraft identifiers. Refer to Table 7.6-11 for a list of the values stored in the table.

***Table 7.1-18. fos_sc_id Table***

| Column Name | Type | Primary Key | Mandatory |
|---|---|---|---|
| scid | char(8) | No | Yes |

The FOS Scheduled Uplink Time Catalog Table provides information about uplink schedule times.

***Table 7.1-19. fos_scheduptime_cat Table***

| Column Name | Type | Primary Key | Mandatory |
|---|---|---|---|
| load_name | char(48) | No | Yes |
| uplink_time | real | No | No |

The FOS String Table contains string information for replay requests which have been submitted.

***Table 7.1-20. fos_string_table Table***

| Column Name | Type | Primary Key | Mandatory |
|---|---|---|---|
| dbid | varchar(20) | No | Yes |
| requestid | int | No | Yes |
| starttime | float | No | Yes |
| stoptime | float | No | Yes |
| stringid | varchar(10) | No | Yes |

The FOS Subsystem Fixed Table contains the FOS subsystem acronyms and associated enumerated values as well as an offset used for setting which subsystems use the event, and the minimum and maximum event ID values allowed for each subsystem. Refer to Table 7.6-12 for a list of the values stored in the table.

***Table 7.1-21. fos_subsys_fix Table***

| Column Name | Type | Primary Key | Mandatory |
|---|---|---|---|
| event_max | numeric(4) | No | Yes |
| event_min | numeric(4) | No | Yes |
| ss_mask_pad | varchar(9) | No | No |
| ss_offset | numeric(10) | No | Yes |
| subsys_ac | char(3) | No | Yes |
| subsys_id | numeric(2) | Yes | Yes |

The FOS System Parameters Table provides a FOS System Parameter's minimum, maximum, default values, and description, as well as which subsystems use the parameter.

***Table 7.1-22. fos_system_parms Table***

| Column Name | Type | Primary Key | Mandatory |
|---|---|---|---|
| default_value | varchar(15) | No | Yes |
| max_value | varchar(15) | No | No |
| min_value | varchar(15) | No | No |
| subsys_mask | numeric(2) | No | No |
| system_mnem | varchar(20) | No | Yes |

The FOS Uplink Information Catalog Table provides information about a load uplink.

***Table 7.1-23. fos_uplinkinfo_cat Table***

| Column Name | Type | Primary Key | Mandatory |
|---|---|---|---|
| uplink_name | char(53) | No | Yes |
| uplink_time | real | Yes | No |
| uplink_crc | int | No | No |
| uplink_pkts | int | No | No |
| part_number | int | No | No |

The Ground Discretes Table provides discrete definitions for ground telemetry.

***Table 7.1-24. ground_discretes Table***

| Column Name | Type | Primary Key | Mandatory |
|---|---|---|---|
| max_value | numeric(10) | No | No |
| min_value | numeric(10) | No | No |
| mnemonic | varchar(20) | No | No |
| state_text | varchar(16) | No | No |

The Interface Fixed Table contains all valid external interfaces to the EOC. Refer to Table 7.6-13 for a list of the values stored in the table.

***Table 7.1-25. interface_fix Table***

| Column Name | Type | Primary Key | Mandatory |
|---|---|---|---|
| description | varchar(20) | No | No |
| interface | numeric(2) | No | No |

The Name Server Table provides information about FOS process connections.

***Table 7.1-26. name_srvr Table***

| Column Name | Type | Primary Key | Mandatory |
|---|---|---|---|
| bind_info_ifld1 | int | No | No |
| bind_info_ifld2 | int | No | No |
| bind_info_ifld3 | int | No | No |
| bind_info_ifld4 | int | No | No |
| bind_info_ifld5 | int | No | No |
| bind_info_sfld1 | varchar(64) | No | No |
| bind_info_sfld2 | varchar(64) | No | No |
| bind_info_sfld3 | varchar(64) | No | No |
| bind_info_sfld4 | varchar(64) | No | No |
| bind_info_sfld5 | varchar(64) | No | No |
| bind_info_type | int | No | No |
| entry_id | varchar(64) | Yes | Yes |
| ep_info_ifld1 | int | No | No |
| ep_info_ifld2 | int | No | No |
| ep_info_ifld3 | int | No | No |
| ep_info_ifld4 | int | No | No |
| ep_info_ifld5 | int | No | No |
| ep_info_ifld6 | int | No | No |
| ep_info_ifld7 | int | No | No |
| ep_info_sfld1 | varchar(64) | No | No |
| ep_info_sfld2 | varchar(64) | No | No |
| ep_info_sfld3 | varchar(64) | No | No |
| ep_info_sfld4 | varchar(64) | No | No |
| ep_info_sfld5 | varchar(64) | No | No |
| ep_info_sfld6 | varchar(64) | No | No |
| ep_info_sfld7 | varchar(64) | No | No |
| host_name | varchar(64) | No | No |
| ipc_type | int | No | No |
| primary | key | No | No |
| proc_id | int | No | No |
| proc_name | varchar(64) | No | No |
| proxy_id | int | No | No |
| serv_inst | int | No | No |
| service | varchar(64) | No | No |
| user_int | int | No | No |
| user_name | varchar(64) | No | No |
| user_role | varchar(64) | No | No |
| user_string | varchar(64) | No | No |

The Operational Database Version Table contains the operational versions of the PDB.

### *7.1-27. odb_version Table*

| Column Name | Type | Primary Key | Mandatory |
|---|---|---|---|
| act_odb_ver | numeric(4) | No | No |
| con_odb_ver | numeric(4) | No | No |
| tc_odb_ver | numeric(4) | No | No |

The Operational Data File Table provides the valid ODF versions and their associated start and stop times.

### *7.1-28. odf_table Table*

| Column Name | Type | Primary Key | Mandatory |
|---|---|---|---|
| odfversion | varchar(4) | No | Yes |
| start_time | float | No | Yes |
| stop_time | float | No | Yes |

The Packet Definitions Table provides the definitions for the ground telemetry mnemonics.

### *Table 7.1-29. packet_defs Table*

| Column Name | Type | Primary Key | Mandatory |
|---|---|---|---|
| data_class | numeric(2) | No | No |
| data_type | numeric(2) | No | No |
| default_value | varchar(15) | No | No |
| description | varchar(60) | No | No |
| high_limit | numeric(2) | No | No |
| item_num | int | No | No |
| length | numeric(3) | No | No |
| limit_flag | numeric(2) | No | No |
| low_limit | numeric(2) | No | No |
| offset | numeric(5) | No | No |
| packet_mnem | varchar(20) | No | No |
| packet_type | numeric(2) | No | No |
| value_type | numeric(2) | No | No |

The Packets Type Table defines the ground telemetry packet types.

***Table 7.1-30. packet_types Table***

| Column Name | Type | Primary Key | Mandatory |
|---|---|---|---|
| header_mnem | varchar(30) | No | No |
| interface | numeric(2) | No | No |
| length | numeric(4) | No | No |
| message_type | numeric(2) | No | No |
| packet_type | numeric(2) | No | No |
| process_state | numeric(2) | No | No |
| variable1 | int | No | No |
| variable2 | int | No | No |
| variable3 | int | No | No |
| variable4 | int | No | No |
| variable5 | int | No | No |

The Parameter Type Fixed Table provides parameter types and associated values. Refer to Table 7.6-14 for a list of the values stored in the table.

***Table 7.1-31. parm_type_fix Table***

| Column Name | Type | Primary Key | Mandatory |
|---|---|---|---|
| parm_desc | varchar(15) | No | No |
| parm_type | char(2) | Yes | Yes |

The Unit Conversion Fixed Table provides the format and type associated with a data unit. Refer to Table 7.6-17 for a list of the values stored in the table.

***Table 7.1-32. unit_conv_fix Table***

| Column Name | Type | Primary Key | Mandatory |
|---|---|---|---|
| data_unit | char(3) | No | No |
| unit_cat | char(20) | No | No |
| unit_fmt | numeric(3) | No | No |
| unit_type | numeric(3) | No | No |

The Unit Format Fixed Table provides unit formats and associated numeric values. Refer to Table 7.6-18 for a list of the values stored in the table.

***Table 7.1-33. unit_format_fix Table***

| Column Name | Type | Primary Key | Mandatory |
|---|---|---|---|
| unit_format_desc | varchar(50) | No | No |
| unit_format_id | numeric(3) | Yes | Yes |

The Unit Type Fixed Table provides unit types and associated numeric values. Refer to Table 7.6-19 for a list of the values stored in the table.

***Table 7.1-34. unit_type_fix Table***

| Column Name | Type | Primary Key | Mandatory |
|---|---|---|---|
| unit_type_desc | varchar(20) | No | No |
| unit_type_id | numeric(2) | Yes | Yes |

The User Authentication Table maintains user authentication information.

***Table 7.1-35. user_auth Table***

| Column Name | Type | Primary Key | Mandatory |
|---|---|---|---|
| password | varchar(192) | No | Yes |
| user_name | varchar(40) | Yes | Yes |

The User Roles Table contains information about FOS user roles.

***Table 7.1-36. user_roles Table***

| Column Name | Type | Primary Key | Mandatory |
|---|---|---|---|
| site_type | numeric(2) | No | No |
| spacecraft | numeric(2) | No | No |
| user_name | char(30) | No | Yes |
| user_type | numeric(2) | No | No |

## 7.2 Command Tables

The Command Description Table provides descriptive information about a spacecraft or instrument command parameter.

***Table 7.2-1. cmd_desc_pdb Table***

| Column Name | Type | Primary Key | Mandatory |
|---|---|---|---|
| atc_inhib_id | numeric(3) | No | No |
| cmd_desc | varchar(80) | No | No |
| cmd_mnem | varchar(20) | No | Yes |
| cmd_pid | numeric(5) | No | Yes |
| component | varchar(30) | No | Yes |
| desc_pdbsrc | char(3) | No | No |
| mjr_assem | varchar(17) | No | Yes |
| pseudo_ops | numeric(1) | No | No |
| st_cmd_ind | numeric(1) | No | No |
| sub_assem | varchar(30) | No | Yes |

The Command Dump Table allows the user to determine which commands are dump commands and which commands are dump abort commands.

***Table 7.2-2. cmd_dump Table***

| Column Name | Type | Primary Key | Mandatory |
|---|---|---|---|
| abort_flag | char(1) | No | Yes |
| cmd_mnem | varchar(20) | No | Yes |

The Command Fixed Data PDB Table defines the data word (1-N) associated with the fixed bit pattern of a command. Word 1 would represent the command destination and word 2 represents the command descriptor.

***Table 7.2-3. cmd_fixdata_pdb Table***

| Column Name | Type | Primary Key | Mandatory |
|---|---|---|---|
| cmd_mnem | varchar(20) | No | Yes |
| cmd_pid | numeric(5) | No | Yes |
| data_value | varchar(4) | No | Yes |
| fdata_pdbsrc | char(3) | No | No |
| wrd_num | numeric(2) | No | Yes |

The Command Field Definition PDB Table defines entries within the spacecraft or instrument table.

***Table 7.2-4. cmd_flddef_pdb Table***

| Column Name | Type | Primary Key | Mandatory |
|---|---|---|---|
| data_units | varchar(3) | No | Yes |
| deflt_value | varchar(22) | No | Yes |
| fld_desc | char(80) | No | No |
| fld_num | numeric(4) | No | Yes |
| fld_pdbsrc | char(3) | No | No |
| max_value | varchar(22) | No | Yes |
| min_value | varchar(22) | No | Yes |
| rg_chk_flg | char(1) | No | Yes |
| scale_fact | numeric(4) | No | Yes |
| tbl_num | numeric(4) | No | Yes |
| val_bit_size | numeric(2) | No | Yes |
| val_ovr_flg | char(1) | No | Yes |
| value_type | varchar(4) | No | Yes |

The Command Large Description PDB Table provides descriptive information about a command parameter.

***Table 7.2-5. cmd_lgdesc_pdb Table***

| Column Name | Type | Primary Key | Mandatory |
|---|---|---|---|
| cmd_desc | text | No | No |
| cmd_mnem | varchar(20) | No | Yes |
| cmd_pid | numeric(5) | No | Yes |
| pdb_src | char(3) | No | No |

The Command Memory Masking Group PDB Table defines areas of memory that are part of the same group.

***Table 7.2-6. cmd_maskgrp_pdb Table***

| Column Name | Type | Primary Key | Mandatory |
|---|---|---|---|
| group_name | char(30) | No | Yes |
| mask_name | char(30) | No | Yes |
| pdb_src | char(3) | No | No |

The Command Memory Masking PDB Table identifies the area of spacecraft or instrument memory which is ignored when comparing the dump and ground memory image.

***Table 7.2-7. cmd_mmask_pdb Table***

| Column Name | Type | Primary Key | Mandatory |
|---|---|---|---|
| mask_name | char(30) | No | Yes |
| num_msk_wrds | numeric(4) | No | Yes |
| pdb_src | char(3) | No | No |
| start_add | numeric(4) | No | Yes |

The Command Mnemonic Report Table is used to peform a check on the mnemonic entered by the user for the generation of the Command PDB Report (by memonic).

***Table 7.2-8. cmd_mnem_rpt Table***

| Column Name | Type | Primary Key | Mandatory |
|---|---|---|---|
| cmd_mnem | varchar(20) | No | Yes |
| exists_flag | char(1) | No | No |

The Command Parameter PDB Table defines the spacecraft and instrument commands which are used to support the EOS AM-1 spacecraft.

***Table 7.2-9. cmd_parm_pdb Table***

| Column Name | Type | Primary Key | Mandatory |
|---|---|---|---|
| cmd_mnem | varchar(20) | No | Yes |
| cmd_pid | numeric(5) | No | Yes |
| cmd_type | varchar(15) | No | Yes |
| parm_pdbsrc | char(3) | No | No |
| rt_name | varchar(19) | No | Yes |
| safety_level | char(1) | No | Yes |
| sub_add | varchar(17) | No | Yes |
| word_cnt | numeric(2) | No | Yes |
| word_type | char(1) | No | Yes |

The Command Prerequisite State PDB Table defines the condition for which a telemetry parameter associated with a command must occur in order to perform prerequisite state checking.

***Table 7.2-10. cmd_pstate_pdb Table***

| Column Name | Type | Primary Key | Mandatory |
|---|---|---|---|
| cmd_mnem | varchar(20) | No | Yes |
| cmd_pid | numeric(5) | No | Yes |
| dneu_ind | char(2) | No | Yes |
| max_value | varchar(15) | No | Yes |
| min_value | varchar(15) | No | Yes |
| preq_mnem | varchar(20) | No | Yes |
| ps_pdbsrc | char(3) | No | No |
| SCC | or | No | No |

The Command Table Definition PDB Table defines areas of spacecraft or instrument memory that are used to store parameters and to supply commands to the CTUI, SCC or instruments.

***Table 7.2-11. cmd_tbldef_pdb Table***

| Column Name | Type | Primary Key | Mandatory |
|---|---|---|---|
| max_size | numeric(5) | No | Yes |
| tbl_desc | varchar(80) | No | No |
| tbl_name | varchar(30) | No | No |
| tbl_num | numeric(4) | No | Yes |
| tbl_pdbsrc | char(3) | No | No |
| tbl_type | varchar(4) | No | Yes |

The Command Type Id Fixed Table provides a list of valid command types and associated numeric values. Refer to Table 7.6-3 for a list of the values stored in the table.

***Table 7.2-12. cmd_type_cfx Table***

| Column Name | Type | Primary Key | Mandatory |
|---|---|---|---|
| cmd_type | varchar(17) | No | Yes |

The Command Authority Users List Table provides a list of users with command authority.

***Table 7.2-13. cmd_user_auth Table***

| Column Name | Type | Primary Key | Mandatory |
|---|---|---|---|
| user_name | char(15) | No | No |

The Command Authority UserStation List Table provides a list of userstations with command authority.

***Table 7.2-14. cmd_ustat_auth Table***

| Column Name | Type | Primary Key | Mandatory |
|---|---|---|---|
| ws_name | char(15) | No | No |

The Command Validation Log contains error messages generated during the command PDB validation process.

***Table 7.2-15. cmd_val_log Table***

| Column Name | Type | Primary Key | Mandatory |
|---|---|---|---|
| cmd_errmsg | varchar(80) | No | No |
| cmd_fld | varchar(16) | No | No |
| cmd_key | varchar(26) | No | No |
| cmd_table | varchar(16) | No | No |
| cmd_value | varchar(20) | No | No |

The Command Variable Data PDB Table defines the subfields associated with variable type commands. Each subfield defines a parameter associated with a command that is to be specified at execution time.

***Table 7.2-16. cmd_vardata_pdb Table (1 of 2)***

| Column Name | Type | Primary Key | Mandatory |
|---|---|---|---|
| cmd_mnem | varchar(20) | No | Yes |
| cmd_pid | numeric(5) | No | Yes |
| conv_grp1 | numeric(4) | No | No |
| conv_grp2 | numeric(4) | No | No |
| deflt_value | varchar(13) | No | Yes |
| dest_firstbit | numeric(4) | No | Yes |
| dest_lastbit | numeric(4) | No | Yes |
| max_value | varchar(13) | No | Yes |
| min_value | varchar(13) | No | Yes |
| st_name1 | varchar(16) | No | No |
| st_name10 | varchar(16) | No | No |
| st_name2 | varchar(16) | No | No |
| st_name3 | varchar(16) | No | No |
| st_name4 | varchar(16) | No | No |
| st_name5 | varchar(16) | No | No |
| st_name6 | varchar(16) | No | No |

*Table 7.2-16. cmd_vardata_pdb Table (2 of 2)*

| Column Name | Type | Primary Key | Mandatory |
|---|---|---|---|
| st_name7 | varchar(16) | No | No |
| st_name8 | varchar(16) | No | No |
| st_name9 | varchar(16) | No | No |
| st_val1 | varchar(13) | No | No |
| st_val10 | varchar(13) | No | No |
| st_val2 | varchar(13) | No | No |
| st_val3 | varchar(13) | No | No |
| st_val4 | varchar(13) | No | No |
| st_val5 | varchar(13) | No | No |
| st_val6 | varchar(13) | No | No |
| st_val7 | varchar(13) | No | No |
| st_val8 | varchar(13) | No | No |
| st_val9 | varchar(13) | No | No |
| start_eu1 | varchar(13) | No | No |
| start_eu2 | varchar(13) | No | No |
| subfld_len | numeric(4) | No | Yes |
| subfld_name | varchar(20) | No | Yes |
| units | varchar(3) | No | Yes |
| vdata_pdbsrc | char(3) | No | No |

The Command Execution Verification PDB Table defines a telemetry parameter used to verify the reception and execution of an associated command by the spacecraft subsystem or instrument.

*Table 7.2-17. cmd_verify_pdb Table*

| Column Name | Type | Primary Key | Mandatory |
|---|---|---|---|
| cev_mask | varchar(16) | No | No |
| cev_mnem | varchar(20) | No | Yes |
| cev_state | varchar(16) | No | No |
| cmd_mnem | varchar(20) | No | Yes |
| cmd_pid | numeric(5) | No | Yes |
| dneu_ind | char(2) | No | Yes |
| high_value | varchar(15) | No | No |
| low_value | varchar(15) | No | No |
| time_out | numeric(12) | No | Yes |
| vd_pdbsrc | char(3) | No | No |

The Command Constraint PDB Fixed Table provides a list of command constraint types and the minimum constraint ID number associated with them. Refer to Table 7.6-2 for a list of the values stored in the table.

***Table 7.2-18. cmdcon_pdb_fix Table***

| Column Name | Type | Primary Key | Mandatory |
|---|---|---|---|
| con_id | int | No | No |
| con_min | numeric(5) | No | Yes |
| con_name | char(16) | No | Yes |

The Command Constraint Bit Rule PDB Table provides the criteria to use when ensuring the value of a bit location for the specified command.

***Table 7.2-19. con_bitrule_pdb Table***

| Column Name | Type | Primary Key | Mandatory |
|---|---|---|---|
| bit_loc | numeric(3) | No | Yes |
| bit_val | numeric(1) | No | Yes |
| const_id | numeric(5) | No | No |
| pdb_src | char(3) | No | No |
| sev_flag | char(1) | No | Yes |
| subfld_name | char(20) | No | No |
| trig_mnem | char(20) | No | Yes |

***Table 7.2-20. con_comrule_pdb Table***

| Column Name | Type | Primary Key | Mandatory |
|---|---|---|---|
| const_id | numeric(5) | No | No |
| out_msg | char(80) | No | Yes |
| pdb_src | char(3) | No | No |
| trig_mnem | char(20) | No | Yes |

The Command Constraint No Exist Rule PDB Table identifies commands that must not occur in the same command list.

***Table 7.2-21. con_noexistrule_pdb Table***

| Column Name | Type | Primary Key | Mandatory |
|---|---|---|---|
| const_id | numeric(5) | No | No |
| excl_mnem | char(20) | No | Yes |
| pdb_src | char(3) | No | No |
| sev_flag | char(1) | No | Yes |
| trig_mnem | char(20) | No | Yes |

The Command Constraint Offset Rule PDB Table provides the criteria used when performing one of four offset rules. Offset rules include "not before", "not after", "not to the remote terminal until", and "no repeat".

***Table 7.2-22. con_offsetrule_pdb Table***

| Column Name | Type | Primary Key | Mandatory |
|---|---|---|---|
| const_id | numeric(5) | No | No |
| delta_time | char(5) | No | Yes |
| max_reps | numeric(10) | No | No |
| pdb_src | char(3) | No | No |
| rule_type | numeric(1) | No | Yes |
| sev_flag | char(1) | No | Yes |
| trig_mnem | char(20) | No | Yes |

The Command Constraint Post Rule PDB Table provides criteria used to ensure that a command occurs within a specified time range after another command is issued.

***Table 7.2-23. con_postrule_pdb Table***

| Column Name | Type | Primary Key | Mandatory |
|---|---|---|---|
| const_id | numeric(5) | No | No |
| max_time | char(5) | No | Yes |
| min_time | char(5) | No | Yes |
| pdb_src | char(3) | No | No |
| sat_mnem | char(20) | No | Yes |
| sev_flag | char(1) | No | Yes |
| trig_mnem | char(20) | No | Yes |

The Command Constraint Pre Rule PDB Table provides criteria to ensure a command occurs prior to another command within a specified time range. An optional command, referred to as the excluder, if specified, must not occur the two commands.

***Table 7.2-24. con_prerule_pdb Table***

| Column Name | Type | Primary Key | Mandatory |
|---|---|---|---|
| const_id | numeric(5) | No | No |
| excl_mnem | char(20) | No | No |
| max_time | char(5) | No | Yes |
| min_time | char(5) | No | Yes |
| pdb_src | char(3) | No | No |
| sat_mnem | char(20) | No | Yes |
| sev_flag | char(1) | No | Yes |
| trig_mnem | char(20) | No | Yes |

The Command Constraint Scalar Rule PDB Table provides the criteria to use when performing the constraint check which ensures the value of the trigger command's subfield satifies the specified data value in association with its relational operator.

***Table 7.2-25. con_scalarrule_pdb Table (1 of 2)***

| Column Name | Type | Primary Key | Mandatory |
|---|---|---|---|
| const_id | numeric(5) | No | No |
| data_val | varchar(13) | No | Yes |
| pdb_src | char(3) | No | No |
| rel_oper | char(2) | No | Yes |
| sev_flag | char(1) | No | Yes |

***Table 7.2-25. con_scalarrule_pdb Table (2 of 2)***

| Column Name | Type | Primary Key | Mandatory |
|---|---|---|---|
| subfld_name | char(20) | No | Yes |
| trig_mnem | char(20) | No | Yes |

The Command Constraint Subfield PDB Table provides the criteria for the command subfield in association with their constraint rule.

***Table 7.2-26. con_subfield_pdb Table***

| Column Name | Type | Primary Key | Mandatory |
|---|---|---|---|
| cmd_mnem | char(20) | No | Yes |
| const_id | numeric(5) | No | No |
| data_val | varchar(13) | No | Yes |
| pdb_src | char(3) | No | No |
| subfld_name | char(20) | No | Yes |

The Command Constraint Subfield Bit PDB Table provides the criteria for the command subfield bits in association with the constraint rule.

***Table 7.2-27. con_subfldbit_pdb Table***

| Column Name | Type | Primary Key | Mandatory |
|---|---|---|---|
| bit_loc | numeric(3) | No | Yes |
| bit_val | numeric(1) | No | Yes |
| cmd_mnem | char(20) | No | Yes |
| const_id | numeric(5) | No | No |
| pdb_src | char(3) | No | No |
| subfld_name | char(20) | No | Yes |

The Command Constraint Validation Log Table contains error messages generated during the constraint PDB validation process.

***Table 7.2-28. con_val_log Table***

| Column Name | Type | Primary Key | Mandatory |
|---|---|---|---|
| con_errmsg | char(80) | No | No |
| con_fld | char(16) | No | No |
| con_key | char(26) | No | No |
| con_table | char(16) | No | No |
| con_value | char(20) | No | No |

The Remote Terminal Name Command Fixed Table provides a list of valid remote terminal names. Refer to Table 7.6-15 for a list of the values stored in the table.

***Table 7.2-29. rt_name_cfx Table***

| Column Name | Type | Primary Key | Mandatory |
|---|---|---|---|
| rt_id | numeric(2) | No | No |
| rt_name | varchar(15) | No | Yes |

The Table Type Command Fixed Table provides a list of valid table types used to store command parameters. Refer to Table 7.6-16 for a list of the values stored in the table.

***Table 7.2-30. tbl_type_cfx Table***

| Column Name | Type | Primary Key | Mandatory |
|---|---|---|---|
| tbl_type | varchar(15) | No | Yes |

This table provides a list of valid data value types for table field definitions. Refer to Table 7.6-20 for a list of the values stored in the table.

***Table 7.2-31. value_type_cfx Table***

| Column Name | Type | Primary Key | Mandatory |
|---|---|---|---|
| value_type | varchar(4) | No | Yes |

## 7.3 Telemetry Tables

The Constant Type Telemetry Fixed Table contains valid data types used with the telemetry constant PDB. Refer to Table 7.6-4 for a list of the values stored in the table.

***Table 7.3-1. const_type_tfx Table***

| Column Name | Type | Primary Key | Mandatory |
|---|---|---|---|
| const_type | varchar(4) | No | Yes |
| ct_desc | varchar(80) | No | No |

The Conversion Type Telemetry Fixed Table contains valid conversion types used with the telemetry calibration conversion PDB. Refer to Table 7.6-5 for a list of the values stored in the table.

***Table 7.3-2. conv_type_tfx Table***

| Column Name | Type | Primary Key | Mandatory |
|---|---|---|---|
| conv_type | varchar(5) | No | Yes |
| ct_desc | varchar(80) | No | No |

The Data Representation Telemetry Fixed Table contains valid data types used with the telemetry parameter PDB. Refer to Table 7.6-6 for a list of the values stored in the table.

***Table 7.3-3. data_rep_tfx Table***

| Column Name | Type | Primary Key | Mandatory |
|---|---|---|---|
| data_rep | varchar(4) | No | Yes |
| dr_desc | varchar(80) | No | No |

The Derived Operator Telemetry Fixed Table contains valid operators used in the derived telemetry equations. Refer to Table 7.6-7 for a list of the values stored in the table.

***Table 7.3-4. derived_oper_tfx Table***

| Column Name | Type | Primary Key | Mandatory |
|---|---|---|---|
| drv_oper | varchar(4) | No | Yes |
| oper_desc | varchar(80) | No | No |

The Telemetry Calibration Curve PDB Table provides the necessary information for the conversion of a raw telemetry data number (DN) to an engineering unit (EU), such as amps or volts. Each parameter may define up to four linear or polynomial conversion equations. This table will provide the necessary criteria for conversion equation selection.

***Table 7.3-5. tlm_calcurve_pdb Table***

| Column Name | Type | Primary Key | Mandatory |
|---|---|---|---|
| conv_num | numeric(4) | No | Yes |
| conv_pdbsrc | char(3) | No | No |
| conv_type | varchar(5) | No | Yes |
| data_units | varchar(3) | No | Yes |
| max_val | numeric(13) | No | Yes |
| min_val | numeric(13) | No | Yes |
| scale_factor | numeric(4) | No | No |
| seg_no | numeric(2) | No | No |
| switch_mnem | varchar(20) | No | Yes |
| tlm_mnem | varchar(20) | No | Yes |
| tlm_pid | numeric(5) | No | Yes |

The Telemetry Catalog Table contains information about archived telemetry.

***Table 7.3-6. tlm_cata Table***

| Column Name | Type | Primary Key | Mandatory |
|---|---|---|---|
| channel | int | No | No |
| data_type | int | No | No |
| space_craft_id | varchar(10) | No | No |
| start_packet | int | No | No |
| start_time | real | No | No |
| stop_packet | int | No | No |
| stop_time | real | No | No |

The Telemetry Constant PDB Table defines the constant values required to support telemetry processing.

***Table 7.3-7. tlm_constant_pdb Table***

| Column Name | Type | Primary Key | Mandatory |
|---|---|---|---|
| const_desc | varchar(80) | No | No |
| const_mnem | varchar(20) | No | Yes |
| const_pdbscr | char(3) | No | No |
| const_pid | numeric(5) | No | Yes |
| const_type | varchar(4) | No | Yes |
| const_value | varchar(23) | No | Yes |

The Telemetry Context PDB Table defines the condition in which a telemetry parameter is decommutated from its defined location.

***Table 7.3-8. tlm_context_pdb Table***

| Column Name | Type | Primary Key | Mandatory |
|---|---|---|---|
| cntxt_mnem | varchar(20) | No | Yes |
| cntxt_pdbsrc | char(3) | No | No |
| hgh_val | numeric(10) | No | Yes |
| low_val | numeric(10) | No | Yes |
| tlm_mnem | varchar(20) | No | Yes |
| tlm_pid | numeric(5) | No | Yes |

The Telemetry Delta PDB Table defines the delta limit checking criteria associated with a telemetry parameter.

***Table 7.3-9. tlm_delta_pdb Table***

| Column Name | Type | Primary Key | Mandatory |
|---|---|---|---|
| del_pdbsrc | char(3) | No | No |
| delta_value | numeric(15,6) | No | Yes |
| dneu_ind | char(2) | No | Yes |
| tlm_mnem | varchar(20) | No | Yes |
| tlm_pid | numeric(5) | No | Yes |

The Telemetry Derived PDB Table defines simple equations that combine previously defined analog, discrete, constant and other previously defined derived via arithmetic or logical functions.

***Table 7.3-10. tlm_derived_pdb Table (1 of 2)***

| Column Name | Type | Primary Key | Mandatory |
|---|---|---|---|
| cal_flag1 | char(1) | No | Yes |
| cal_flag2 | char(1) | No | Yes |
| cal_flag3 | char(1) | No | No |
| cal_flag4 | char(1) | No | No |
| cal_flag5 | char(1) | No | No |
| cal_flag6 | char(1) | No | No |
| comp_rate | numeric(2) | No | Yes |
| drv_mnem | varchar(20) | No | Yes |
| drv_pdbsrc | char(3) | No | No |
| drv_pid | numeric(5) | No | Yes |
| drv_units | varchar(3) | No | Yes |
| input_op1 | varchar(20) | No | Yes |
| input_op2 | varchar(20) | No | Yes |
| input_op3 | varchar(20) | No | No |
| input_op4 | varchar(20) | No | No |
| input_op5 | varchar(20) | No | No |
| input_op6 | varchar(20) | No | No |
| oper_1 | varchar(4) | No | Yes |
| oper_2 | varchar(4) | No | No |
| oper_3 | varchar(4) | No | No |
| oper_4 | varchar(4) | No | No |
| oper_5 | varchar(4) | No | No |

The Telemetry Description PDB Table provides descriptive information about a telemetry parameter. It constains analog, discrete and derived parameter definitions.

***Table 7.3-11. tlm_desc_pdb Table***

| Column Name | Type | Primary Key | Mandatory |
|---|---|---|---|
| component | varchar(30) | No | No |
| desc_pdbscr | char(3) | No | No |
| mjr_assem | varchar(17) | No | No |
| parm_type | char(1) | No | Yes |
| rt_id | varchar(19) | No | No |
| ssc_req | char(1) | No | Yes |
| subassem | varchar(30) | No | No |
| tlm_desc | varchar(60) | No | No |
| tlm_mnem | varchar(20) | No | Yes |
| tlm_pid | numeric(5) | No | Yes |
| tlm_type | varchar(22) | No | No |

The Telemetry Derived Input PDB Table defines the input values used to define the derived equation. An input operator may be specfied as a previously defined analog, discrete, constant and other previously defined derived parameter.

***Table 7.3-12. tlm_drvinput_pdb Table***

| Column Name | Type | Primary Key | Mandatory |
|---|---|---|---|
| drv_mnem | varchar(20) | No | Yes |
| drv_pid | numeric(5) | No | Yes |
| input_op | varchar(20) | No | Yes |
| order_num | numeric(3) | No | Yes |
| cal_flag | char(1) | No | Yes |
| ind | numeric(1) | No | Yes |
| pdb_src | char(3) | No | No |

The Telemetry Derived Parameter PDB Table identifies simple equations. The values of the equation is specfied in the tlm_drvinput_pdb database table.

***Table 7.3-13. tlm_drvparm_pdb Table***

| Column Name | Type | Primary Key | Mandatory |
|---|---|---|---|
| comp_rate | numeric(2) | No | Yes |
| drv_desc | varchar(20) | No | Yes |
| drv_mnem | varchar(20) | No | Yes |
| drv_pid | numeric(5) | No | Yes |
| drv_units | varchar(3) | No | Yes |
| pdb_src | char(3) | No | No |

The Telemetry Discrete State Table associates a single text state to a range of values for a discrete telemetry parameter.

***Table 7.3-14. tlm_dstate_pdb Table***

| Column Name | Type | Primary Key | Mandatory |
|---|---|---|---|
| ds_pdbsrc | char(3) | No | No |
| max_value | numeric(10) | No | Yes |
| min_value | numeric(10) | No | Yes |
| state_text | varchar(16) | No | Yes |
| tlm_mnem | varchar(20) | No | Yes |
| tlm_pid | numeric(5) | No | Yes |

The Telemetry Large Desciption Table provides descriptive information about a telemetry parameter.

***Table 7.3-15. tlm_lgdesc_pdb Table***

| Column Name | Type | Primary Key | Mandatory |
|---|---|---|---|
| pdb_src | char(3) | No | No |
| tlm_desc | text | No | No |
| tlm_mnem | varchar(20) | No | Yes |
| tlm_pid | numeric(5) | No | Yes |

The Telemetry Limit Selection PDB Table defines the criteria for selecting a limit set for a telemetry parameter. The value of the parameter defined by the limit switch mnemonic will indicate the limit set to use.

***Table 7.3-16. tlm_limsel_pdb Table***

| Column Name | Type | Primary Key | Mandatory |
|---|---|---|---|
| limit_set | numeric(1) | No | Yes |
| max_value | numeric(13) | No | Yes |
| min_value | numeric(13) | No | Yes |
| sel_pdbsrc | char(3) | No | No |
| swit_mnem | varchar(20) | No | Yes |
| tlm_mnem | varchar(20) | No | Yes |
| tlm_pid | numeric(5) | No | Yes |

The Telemetry Linear Conversion PDB Table defines a linear conversion equation using up to 15 pairs of start and end points. Each linear equation is identified by a conversion group number and name. Mutiple telemetry parameters may access the same conversion equation by its group number.

***Table 7.3-17. tlm_lineconv_pdb Table (1 of 2)***

| Column Name | Type | Primary Key | Mandatory |
|---|---|---|---|
| converted_1 | varchar(15) | No | Yes |
| converted_10 | varchar(15) | No | No |
| converted_11 | varchar(15) | No | No |
| converted_12 | varchar(15) | No | No |
| converted_13 | varchar(15) | No | No |
| converted_14 | varchar(15) | No | No |
| converted_15 | varchar(15) | No | No |
| converted_16 | varchar(15) | No | No |
| converted_2 | varchar(15) | No | Yes |
| converted_3 | varchar(15) | No | No |
| converted_4 | varchar(15) | No | No |
| converted_5 | varchar(15) | No | No |
| converted_6 | varchar(15) | No | No |
| converted_7 | varchar(15) | No | No |
| converted_8 | varchar(15) | No | No |
| converted_9 | varchar(15) | No | No |
| line_name | varchar(25) | No | Yes |
| line_num | numeric(4) | No | Yes |
| line_pdbscr | char(3) | No | No |
| raw_1 | numeric(15) | No | Yes |

*Table 7.3-17. tlm_lineconv_pdb Table (2 of 2)*

| Column Name | Type | Primary Key | Mandatory |
|---|---|---|---|
| raw_10 | numeric(15) | No | No |
| raw_11 | numeric(15) | No | No |
| raw_12 | numeric(15) | No | No |
| raw_13 | numeric(15) | No | No |
| raw_14 | numeric(15) | No | No |
| raw_15 | numeric(15) | No | No |
| raw_16 | numeric(15) | No | No |
| raw_2 | numeric(15) | No | Yes |
| raw_3 | numeric(15) | No | No |
| raw_4 | numeric(15) | No | No |
| raw_5 | numeric(15) | No | No |
| raw_6 | numeric(15) | No | No |
| raw_7 | numeric(15) | No | No |
| raw_8 | numeric(15) | No | No |
| raw_9 | numeric(15) | No | No |

The Telemetry Mnemonic Report Table is used to peform a check on the mnemonic entered by the user for the generation of the Telemetry PDB Report (by mnemonic).

*Table 7.3-18. tlm_mnem_rpt Table*

| Column Name | Type | Primary Key | Mandatory |
|---|---|---|---|
| exists_flag | char(1) | No | No |
| health | & | No | No |
| tlm_mnem | varchar(20) | No | Yes |

The Telemetry Packet PDB Table defines valid CCSDS standard source data packets from the telemetry EOS Data Operations System (EDOS) Data Units (EDUs). The packet types supported by the EOS AM-1 spacecraft include housekeeping packets, health & safety packets, diagnostic packets and standby CTIU packets.

*Table 7.3-19. tlm_packet_pdb Table*

| Column Name | Type | Primary Key | Mandatory |
|---|---|---|---|
| pkt_apid | numeric(4) | No | Yes |
| pkt_desc | varchar(80) | No | No |
| pkt_len | numeric(4) | No | Yes |
| pkt_pdbsrc | char(3) | No | No |

The Telemetry Parameter PDB Table identifies analog and discrete telemetry parameters supporting the EOS AM-1 spacecraft. Each record contains location information used to decommutate the downlink telemetry streams. A telemetry parameter is uniquely identified by the application process identifier, telemetry identifier, telemetry mnemonic, major cycle ID and the telemetry instance.

***Table 7.3-20. tlm_parm_pdb Table***

| Column Name | Type | Primary Key | Mandatory |
|---|---|---|---|
| comp_num | numeric(1) | No | No |
| comp_size | numeric(1) | No | No |
| cycle_id | numeric(2) | No | Yes |
| data_rep | varchar(4) | No | Yes |
| delta_time | numeric(4) | No | Yes |
| parm_size | numeric(2) | No | Yes |
| pkt_apid | numeric(4) | No | Yes |
| pkt_offset | numeric(5) | No | Yes |
| pkt_pdbsrc | char(3) | No | No |
| tlm_inst | numeric(3) | No | Yes |
| tlm_mnem | varchar(20) | No | Yes |
| tlm_pid | numeric(5) | No | Yes |

The Telemetry Polynomial Conversion PDB Table defines the coefficients used to convert raw values to EUs. Each conversion equation is identified by a conversion group number and name. Multiple telemetry parameters may access the same conversion equation by its group number.

***Table 7.3-21. tlm_polyconv_pdb Table (1 of 2)***

| Column Name | Type | Primary Key | Mandatory |
|---|---|---|---|
| c_five | varchar(15) | No | No |
| c_four | varchar(15) | No | No |
| c_one | varchar(15) | No | Yes |
| c_seven | varchar(15) | No | No |
| c_six | varchar(15) | No | No |
| c_three | varchar(15) | No | No |
| c_two | varchar(15) | No | Yes |
| c_zero | varchar(15) | No | Yes |
| poly_name | varchar(25) | No | Yes |
| poly_num | numeric(4) | No | Yes |
| poly_pdbscr | char(3) | No | No |

The Telemetry Red/Yellow Limits Table defines red/yellow - high/low limit checking criteria associated with an analog or discrete telemetry parameter.

***Table 7.3-22. tlm_rylim_pdb Table***

| Column Name | Type | Primary Key | Mandatory |
|---|---|---|---|
| dneu_ind | char(2) | No | Yes |
| limit_set | numeric(1) | No | Yes |
| red_high | numeric(15,6) | No | Yes |
| red_low | numeric(15,6) | No | Yes |
| rylim_pdbsrc | char(3) | No | No |
| tlm_mnem | varchar(20) | No | Yes |
| tlm_pid | numeric(5) | No | Yes |
| yellow_high | numeric(15,6) | No | Yes |
| yellow_low | numeric(15,6) | No | Yes |

The Telemetry Validation Log Table contains error messages generated during the telemetry PDB validation process.

***Table 7.3-23. tlm_val_log Table***

| Column Name | Type | Primary Key | Mandatory |
|---|---|---|---|
| tlm_errmsg | varchar(80) | No | No |
| tlm_fld | varchar(16) | No | No |
| tlm_key | varchar(26) | No | No |
| tlm_table | varchar(16) | No | No |
| tlm_value | varchar(20) | No | No |

## 7.4 Planning and Scheduling Tables

The Activity Component Table contains information about components of an activity such as the activity duration, command mnemonics, command time offsets, mode, command parameters, ECL directives, and criticality of the commands.

***Table 7.4-1. act_actcomponent_pst Table***

| Column Name | Type | Primary Key | Mandatory |
|---|---|---|---|
| actid | int | No | Yes |
| classname | varchar(32) | No | Yes |
| relativetostart | tinyint | No | Yes |
| offsettime | int | No | Yes |
| offsettimems | int | No | Yes |
| cmplxactid | int | No | No |
| useduration | tinyint | No | No |
| timeinfoid | int | No | No |
| stopofftime | int | No | No |
| stopofftimems | int | No | No |
| rsname | varchar(32) | No | No |
| newmode | varchar(20) | No | No |
| directivename | varchar(20) | No | No |
| cmdid | numeric(10) | No | No |
| description | varchar(64) | No | No |
| mnemonic | varchar(20) | No | No |
| critical | tinyint | No | No |
| paramid | int | No | No |
| ecldirective | varchar(64) | No | No |
| cmdprocname | varchar(20) | No | No |

The Activity Table Planning and Scheduling contains activity information such as the activity name, criticality of the activity, and the activity scheduling information.

***Table 7.4-2. act_activity_pst Table (1 of 2)***

| Column Name | Type | Primary Key | Mandatory |
|---|---|---|---|
| actid | int | Yes | Yes |
| actname | varchar(32) | No | Yes |
| classname | varchar(32) | No | Yes |
| priority | int | No | Yes |
| resourcename | varchar(32) | No | No |
| amcritical | tinyint | No | No |
| description | varchar(255) | No | No |
| commcode | varchar(20) | No | No |
| schedinfoid | int | No | No |

The Activity Allocation Table contains the information about allocations of an activity. The information includes the plan name, start and stop times of the allocation, the id of the corresponding activity and resource, scheduling information, and the annotation of the activity, as well as if the allocation is locked.

***Table 7.4-3. act_alloc_pst Table***

| Column Name | Type | Primary Key | Mandatory |
|---|---|---|---|
| allocid | int | Yes | Yes |
| starttime | int | No | Yes |
| starttimems | int | No | Yes |
| stoptime | int | No | Yes |
| stoptimems | int | No | Yes |
| planname | varchar(32) | Yes | Yes |
| classname | varchar(32) | No | Yes |
| lock | tinyint | No | Yes |
| actid | smallint | No | No |
| rsid | smallint | No | No |
| schedinfoid | numeric(10) | No | No |
| actstarttime | int | No | No |
| actstarttimems | int | No | No |
| actstoptime | int | No | No |
| actstoptimems | int | No | No |
| annotation | varchar(16) | No | No |
| parentactid | smallint | No | No |
| parentallocid | int | No | No |

The ASTER DAR ID Table contains the information about the ASTER DAR IDs.

***Table 7.4-4. act_asterdarids_pst Table***

| Column Name | Type | Primary Key | Mandatory |
|---|---|---|---|
| schedid | numeric(10) | No | Yes |
| asterdarid | varchar(16) | No | Yes |

The Baseline Activity Profile (BAP) Table contains the information about the BAPs such as the BAP name, the resource name on which the BAP is defined and the installation time of the BAP, if any.

***Table 7.4-5. act_bap_pst Table***

| Column Name | Type | Primary Key | Mandatory |
|---|---|---|---|
| bapid | int | Yes | Yes |
| bapname | varchar(64) | No | Yes |
| resourcename | varchar(32) | No | Yes |
| installtimesecs | int | No | Yes |
| installtimemsecs | int | No | Yes |

The BAP Reference Table contains the information about the activities referenced by the BAP, the frequency, and the scheduling information.

***Table 7.4-6. act_bapactref_pst Table***

| Column Name | Type | Primary Key | Mandatory |
|---|---|---|---|
| bapid | int | No | Yes |
| refactid | int | No | Yes |
| periodsecs | int | No | Yes |
| periodmsecs | int | No | Yes |
| periodunit | varchar(10) | No | Yes |
| schedinfoid | numeric(10) | No | No |

The Command Parameters Table contains the information about the parameters associated with commands in an activity. The information includes whether the parameter is modifiable, the value ranges for float, and int parameters, discrete values for discrete parameters, function(s) and the function arguments, if any, associated with the parameter.

***Table 7.4-7. act_commandparam_pst Table***

| Column Name | Type | Primary Key | Mandatory |
|---|---|---|---|
| paramid | numeric(10) | No | Yes |
| paramname | varchar(32) | No | Yes |
| paramnumber | smallint | No | Yes |
| cmdnumber | smallint | No | Yes |
| classname | varchar(32) | No | Yes |
| modifiable | tinyint | No | No |
| discretevalue | varchar(20) | No | No |
| floatlowvalue | double precision | No | No |
| floathighvalue | double precision | No | No |
| floatvalue | double precision | No | No |
| intlowvalue | int | No | No |
| inthighvalue | int | No | No |
| intvalue | int | No | No |
| functionname | varchar(20) | No | No |
| rsname | varchar(32) | No | No |
| arg1 | double precision | No | No |
| arg2 | double precision | No | No |
| arg3 | double precision | No | No |
| arg4 | double precision | No | No |

The Comm Buffer Name Table contains the information about the ordering of the SSR buffers when a comm contact is scheduled.

***Table 7.4-8. act_commbufnames_pst Table***

| Column Name | Type | Primary Key | Mandatory |
|---|---|---|---|
| schedid | numeric(10) | No | Yes |
| commbufname | varchar(16) | No | Yes |

The Discrete Values Table contains the information about the discrete parameter values. It contains the parameter ID, and the valid set of discrete values that the parameter can take.

***Table 7.4-9. act_discretevalues_pst Table***

| Column Name | Type | Primary Key | Mandatory |
|---|---|---|---|
| paramid | numeric(10) | No | Yes |
| paramnumber | numeric(5) | No | Yes |
| discretevalue | varchar(20) | No | Yes |

The NCC Parameters Table contains the information about NCC parameters. The information includes the NCC parameter name, the scheduling information, and string or int values.

***Table 7.4-10. act_nccparams_pst Table***

| Column Name | Type | Primary Key | Mandatory |
|---|---|---|---|
| schedid | numeric(10) | No | Yes |
| classname | varchar(32) | No | Yes |
| nccparamname | varchar(8) | No | Yes |
| nccstringvalue | varchar(20) | No | No |
| nccintvalue | int | No | No |

The Scheduling Information Table contains the information about the scheduling of activities such as start and stop times, the wall-clock time when an activity was scheduled, the Id of the BAP from which the activity was scheduled. For ASTER activities, the table contains the pointing angle information. For comm contact activities, the table contains the resource name, Supiden. For load uplink activities it contains the load name, load size, valid load uplink start and stop times. For downlink activities, it contains the buffer name, the ending data volume, and the data rate.

***Table 7.4-11. act_schedinfo_pst Table (1 of 2)***

| Column Name | Type | Primary Key | Mandatory |
|---|---|---|---|
| schedinfoid | numeric(10) | No | Yes |
| paramid | numeric(10) | No | No |
| startid | numeric(10) | No | No |
| stopid | numeric(10) | No | No |
| start_date | varchar(8) | No | No |
| start_time | varchar(8) | No | No |
| stop_date | varchar(8) | No | No |
| stop_time | varchar(8) | No | No |
| classname | varchar(32) | No | Yes |
| bapid | numeric(10) | No | Yes |
| timescheduled | int | No | No |

*Table 7.4-11. act_schedinfo_pst Table (2 of 2)*

| Column Name | Type | Primary Key | Mandatory |
|---|---|---|---|
| schedinfoid | numeric(10) | No | No |
| paramid | numeric(10) | No | No |
| startid | numeric(10) | No | No |
| stopid | numeric(10) | No | No |
| timescheduledms | int | No | No |
| asteractid | int | No | No |
| startpointangle | double precision | No | No |
| stoppointangle | double precision | No | No |
| commrsname | varchar(32) | No | No |
| action | int | No | No |
| supiden | varchar(32) | No | No |
| loadname | varchar(32) | No | No |
| attempt | int | No | No |
| numtries | int | No | No |
| loadsize | int | No | No |
| validstart | int | No | No |
| validstartms | int | No | No |
| validstop | int | No | No |
| validstopms | int | No | No |
| buffername | varchar(16) | No | No |
| endvolume | double precision | No | No |
| datarate | double precision | No | No |
| actid | int | No | No |

The Time Information Table contains the information about event times such as the event time, event duration, event type, sequence number of the event in an orbit, and the orbit number. This table is referenced from the Scheduling information table above for all the times such as start and stop times.

***Table 7.4-12. act_timeinfo_pst Table***

| Column Name | Type | Primary Key | Mandatory |
|---|---|---|---|
| timeinfoid | numeric(10) | No | Yes |
| classname | varchar(32) | No | Yes |
| timesec | int | No | Yes |
| timemicrosec | int | No | Yes |
| durationunit | varchar(20) | No | No |
| rsid | int | No | No |
| eventtype | varchar(64) | No | No |
| sequencenumber | smallint | No | No |
| orbitnumber | smallint | No | No |
| deltasec | int | No | No |
| deltamicrosec | int | No | No |

The CERES Events Table contains the information about the CERES events such as the event name, start and stop times, sequence number of the event in an orbit, and the orbit number.

***Table 7.4-13. ceresevent_pst Table (1 of 2)***

| Column Name | Type | Primary Key | Mandatory |
|---|---|---|---|
| classname | varchar(32) | No | Yes |
| name | varchar(56) | No | Yes |
| start | int | No | Yes |
| start_ms | int | No | Yes |
| stop | int | No | Yes |
| stop_ms | int | No | Yes |
| orbit | int | No | No |
| sequence | smallint | No | No |

The Function Parameters Table contains the information about functions associated with command parameters. The information includes the function name, the resource name and the function arguments.

***Table 7.4-14. cmd_funcparam_pst Table***

| Column Name | Type | Primary Key | Mandatory |
|---|---|---|---|
| cmdid | numeric(10) | No | Yes |
| paramname | varchar(32) | No | Yes |
| paramnumber | smallint | No | Yes |
| classname | varchar(32) | No | Yes |
| funcname | varchar(20) | No | No |
| rsname | varchar(32) | No | No |
| arg1 | double precision | No | No |
| arg2 | double precision | No | No |
| arg3 | double precision | No | No |
| arg4 | double precision | No | No |

The Command Prerequisite State Table defines the condition for which a telemetry parameter associated with a command must occur in order to perform prerequisite state checking.

***Table 7.4-15. cmd_pstate_pdb Table***

| Column Name | Type | Primary Key | Mandatory |
|---|---|---|---|
| ps_pdbsrc | char(3) | No | Yes |
| cmd_pid | numeric(5) | No | Yes |
| cmd_mnem | varchar(20) | No | Yes |
| preq_mnem | varchar(20) | No | Yes |
| dneu_ind | char(2) | No | Yes |
| min_value | varchar(15) | No | Yes |
| max_value | varchar(15) | No | Yes |

The Activity Factory Table contains the information about activity ID factory.

***Table 7.4-16. idfact_act_pst Table***

| Column Name | Type | Primary Key | Mandatory |
|---|---|---|---|
| idfact | numeric(10,0) | No | Yes |

The Allocation Factory Table contains the information about allocation ID factory.

***Table 7.4-17. idfact_alloc_pst Table***

| Column Name | Type | Primary Key | Mandatory |
|---|---|---|---|
| idfact | numeric(10,0) | No | Yes |

The BAP Factory Table contains the information about BAP ID factory.

***Table 7.4-18. idfact_bap_pst Table***

| Column Name | Type | Primary Key | Mandatory |
|---|---|---|---|
| idfact | numeric(10,0) | No | Yes |

The Constraint Factory Table contains the information about Constraint ID factory.

***Table 7.4-19. idfact_constraint_pst Table***

| Column Name | Type | Primary Key | Mandatory |
|---|---|---|---|
| idfact | numeric(10,0) | No | Yes |

The Instrument Target Sites Table stores target (point on the earth) information submitted by the instrument team. The instrument team submits a file, the file information is bulk copied into a table called temp_instr_tgt_sites, and from that table the information is copied here, instr_tgt_sites. This information is used by the Planning and Scheduling Event Generator tool.

***Table 7.4-20. instr_tgt_sites Table (1 of 2)***

| Column Name | Type | Primary Key | Mandatory |
|---|---|---|---|
| target_name | varchar(50) | No | Yes |
| target_id | varchar(8) | Yes | Yes |
| instrument | varchar(6) | Yes | Yes |
| lat | float | No | Yes |
| lon | float | No | Yes |
| alt | float | No | Yes |
| type | varchar(8) | No | Yes |
| extent | float | No | No |
| comments | varchar(255) | No | No |

The Help Table contains the information about the Online Help function supported by the P&S tools. It include the reference from the software and the corresponding URL name from the User's Guide.

***Table 7.4-21. mis_help_pst Table***

| Column Name | Type | Primary Key | Mandatory |
|---|---|---|---|
| classname | varchar(32) | No | Yes |
| context | varchar(32) | No | Yes |
| url | varchar(128) | No | Yes |

The Plan Access Table contains the information about the access established on a plan by users. The information includes plan name, resource ID, user name and the start and stop time of the access.

***Table 7.4-22. pln_access_pst Table***

| Column Name | Type | Primary Key | Mandatory |
|---|---|---|---|
| baseplanname | varchar(40) | No | Yes |
| resourceid | int | No | Yes |
| starttime | int | No | Yes |
| starttimems | int | No | Yes |
| stoptime | int | No | Yes |
| stoptimems | int | No | Yes |
| uniqueusername | varchar(80) | No | Yes |
| openplanname | varchar(40) | No | Yes |

The Plan Lock Table contains the information about plan locks.

***Table 7.4-23. pln_lock_pst Table***

| Column Name | Type | Primary Key | Mandatory |
|---|---|---|---|
| lock | tinyint | No | Yes |

The Plan Permission table contains the information about plan permissions such as the plan name, resource ID, and lock time.

***Table 7.4-24. pln_permission_pst Table***

| Column Name | Type | Primary Key | Mandatory |
|---|---|---|---|
| planname | varchar(32) | No | Yes |
| resourceid | int | No | Yes |
| classname | varchar(32) | No | Yes |
| locktime | int | No | No |
| locktimems | int | No | No |

The Plan Table contains information about a Plan such as the plan name, owner, version number, and the DAS time set up on the plan.

***Table 7.4-25. pln_plan_pst Table***

| Column Name | Type | Primary Key | Mandatory |
|---|---|---|---|
| planname | varchar(32) | Yes | Yes |
| planowner | varchar(32) | No | Yes |
| classname | varchar(32) | No | Yes |
| version | int | No | Yes |
| dastime | int | No | No |
| dastimems | int | No | No |
| latedelta | int | No | No |
| latedeltams | int | No | No |

The Plan User-Group Table contains the information about user group that is authorized to use the plan such as the plan name, group name and the resource ID.

***Table 7.4-26. pln_usergroup_pst Table***

| Column Name | Type | Primary Key | Mandatory |
|---|---|---|---|
| planname | varchar(32) | No | Yes |
| resourceid | int | No | Yes |
| groupname | varchar(32) | No | Yes |

The Resource Activities Table contains the information about state of the resource and the activity ID.

***Table 7.4-27. res_actids_pst Table***

| Column Name | Type | Primary Key | Mandatory |
|---|---|---|---|
| stateid | numeric(5) | No | Yes |
| actid | int | No | Yes |

The Constraint Table contains the information about constraints defined on resources such as constraint name, description, whether this is a hard or a soft constraint, and the two sets of data that define the left and right had side of the constraint definition: resource name, state, event type, and the time delta.

***Table 7.4-28. res_constraint Table***

| Column Name | Type | Primary Key | Mandatory |
|---|---|---|---|
| constraintid | int | No | Yes |
| constraintname | varchar(32) | No | Yes |
| classname | varchar(32) | No | Yes |
| hardflag | tinyint | No | Yes |
| description | varchar(255) | No | Yes |
| leftrsname | varchar(32) | No | Yes |
| rightrsname | varchar(32) | No | Yes |
| leftstate | varchar(32) | No | Yes |
| rightstate | varchar(32) | No | Yes |
| leftclass | varchar(32) | No | No |
| rightclass | varchar(32) | No | No |
| periodsec | int | No | No |
| periodms | int | No | No |

The Events Type Table contains the information about events such as the event name, description, and information about parsing the event characteristics.

***Table 7.4-29. res_eventtype_pst Table***

| Column Name | Type | Primary Key | Mandatory |
|---|---|---|---|
| rsid | int | No | Yes |
| eventname | varchar(64) | No | Yes |
| description | varchar(64) | No | Yes |
| classname | varchar(32) | No | Yes |
| parsename | varchar(64) | No | Yes |
| parsesep | varchar(1) | No | Yes |
| isvalid | int | No | Yes |

The Mode Table contains the information about modes on P&S resources. The information includes resource ID, mode name, and the power and data rate associated with the mode.

***Table 7.4-30. res_mode_pst Table***

| Column Name | Type | Primary Key | Mandatory |
|---|---|---|---|
| rsid | int | Yes | Yes |
| modename | varchar(20) | Yes | Yes |
| power | double precision | No | Yes |
| datarate | double precision | No | Yes |

The Resource Connect Table contains the information about resource associations such as the parent resource name and the child resource name.

***Table 7.4-31. res_resconn_pst Table***

| Column Name | Type | Primary Key | Mandatory |
|---|---|---|---|
| parentresource | varchar(32) | No | Yes |
| childresource | varchar(32) | No | Yes |
| baseflag | tinyint | No | No |

The Resource Table contains the information about P&S resources. The information includes the name, subsystem that the resource belongs to, and other attributes like power consumption, data rate, buffer volume, playback rate, as appropriate for the type of resource.

***Table 7.4-32. res_resource_pst Table***

| Column Name | Type | Primary Key | Mandatory |
|---|---|---|---|
| resourceid | smallint | Yes | Yes |
| resourcename | varchar(32) | No | Yes |
| classname | varchar(32) | No | Yes |
| subsystem | varchar(8) | No | Yes |
| maxwatts | double precision | No | No |
| maxsize | double precision | No | No |
| maxrate | double precision | No | No |
| discreterate | int | No | No |
| approval | int | No | No |
| pbrate | double precision | No | No |
| pbdelay | double precision | No | No |
| locx | double precision | No | No |
| locz | double precision | No | No |

The Roles Table contains the information about the authorized user roles. It defines the names of user(s) authorized to modify a given resource characteristics.

***Table 7.4-33. res_role_pst Table***

| Column Name | Type | Primary Key | Mandatory |
|---|---|---|---|
| rsid | int | No | Yes |
| rolename | varchar(20) | No | Yes |

The SResource Connection Table contains the information about the parent resource and its children resources.

***Table 7.4-34. res_sresconn_pst Table***

| Column Name | Type | Primary Key | Mandatory |
|---|---|---|---|
| parentresource | varchar(32) | No | Yes |
| childresource | varchar(32) | No | Yes |

The SResource Table contains the information about Schedulable resources.

***Table 7.4-35. res_sresource_pst Table***

| Column Name | Type | Primary Key | Mandatory |
|---|---|---|---|
| resourcename | varchar(32) | No | Yes |
| classname | varchar(32) | No | Yes |

The Resource State Table contains the information about states of resources. The information includes resource ID, plan name, start and stop time of a state on the resource, the activity and the allocation that caused the state on the resource, and other data like data rate, power, as applicable.

***Table 7.4-36. res_state_pst Table***

| Column Name | Type | Primary Key | Mandatory |
|---|---|---|---|
| resourceid | int | No | Yes |
| planname | varchar(32) | No | Yes |
| classname | varchar(32) | No | Yes |
| starttime | int | No | Yes |
| starttimems | int | No | Yes |
| stoptime | int | No | Yes |
| stoptimems | int | No | Yes |
| actid | int | No | No |
| namedname | varchar(32) | No | No |
| allocid | int | No | No |
| status | int | No | No |
| locked | int | No | No |
| datarate | double precision | No | No |
| nummbstart | double precision | No | No |
| watts | double precision | No | No |
| stateid | numeric(5) | Yes | No |
| commrsname | varchar(32) | No | No |

The Violations Table contains the information about constraint violations detected on a plan. The information includes the constraint ID, the description and the state which is in violation.

***Table 7.4-37. res_violations_pst Table***

| Column Name | Type | Primary Key | Mandatory |
|---|---|---|---|
| stateid | numeric(5) | No | Yes |
| constraintid | int | No | Yes |
| description | varchar(64) | No | No |

The Name Server Registration Table contains the information about processes registered with the P&S name server at given time. The table contains the host name, process name, process ID, port number, and the user name.

***Table 7.4-38. sns_register_pst Table***

| Column Name | Type | Primary Key | Mandatory |
|---|---|---|---|
| username | varchar(32) | No | Yes |
| host | varchar(32) | No | Yes |
| name | varchar(32) | No | Yes |
| port | int | No | Yes |
| service | varchar(32) | No | Yes |
| pid | int | No | Yes |
| classname | varchar(32) | No | Yes |

The Target Events Table contains the information about target events generated by the event generator. The information includes the event name, the start and stop times, orbit and sequence number, the resource name, target name, target type, and distance.

***Table 7.4-39. targetevent_pst Table***

| Column Name | Type | Primary Key | Mandatory |
|---|---|---|---|
| classname | varchar(32) | No | Yes |
| name | varchar(64) | No | Yes |
| start | int | No | Yes |
| start_ms | int | No | Yes |
| stop | int | No | Yes |
| stop_ms | int | No | Yes |
| orbit | int | No | No |
| sequence | smallint | No | No |
| instrument | varchar(16) | No | Yes |
| target | varchar(48) | No | Yes |
| target_type | varchar(16) | No | Yes |
| target_id | varchar(24) | No | Yes |
| distance | double precision | No | Yes |
| category | int | No | No |

This table stores target (point on the earth) information submitted by the instrument team. The instrument team submits a file, the file information is bulk copied into a table called temp_instr_tgt_sites, and from that table the information is copied here, instr_tgt_sites. This information is used by the Planning and Scheduling Event Generator tool.

***Table 7.4-40. temp_instr_tgt_sites Table***

| Column Name | Type | Primary Key | Mandatory |
|---|---|---|---|
| target_name | varchar(50) | No | Yes |
| target_id | varchar(8) | Yes | Yes |
| instrument | varchar(6) | Yes | Yes |
| lat | float | No | Yes |
| lon | float | No | Yes |
| alt | float | No | No |
| type | varchar(8) | No | Yes |
| extent | float | No | Yes |
| comments | varchar(255) | No | No |

## 7.5 FOS FDF Products Tables

The FDF AM-1 Range Data Table contains information about the spacecraft ranging data file which will give prediction products that will give, for each second in each real-time contact in the requested timespan, an accurate measurement of the spacecraft's range from WSTGT.

***Table 7.5-1. fdf_am1_range_data Table***

| Column Name | Type | Primary Key | Mandatory |
|---|---|---|---|
| data_pt | char(14) | No | No |
| orb_num | numeric(5) | No | No |
| spcrft_rng | numeric(8) | No | No |
| tdrs_id | char(6) | No | Yes |
| tdrs_rng | numeric(8) | No | No |

***Table 7.5-2. fdf_am1_range_data_hdr Table***

| Column Name | Type | Primary Key | Mandatory |
|---|---|---|---|
| end_time | char(14) | No | No |
| file_cre_time | char(14) | No | No |
| file_type | char(14) | No | No |
| sate_id | char(8) | No | No |
| start_time | char(14) | No | No |
| stepsize | char(5) | No | No |

The FDF Apogee and Perigee Data Table contains information about the predicted apogee and perigee altitudes, along with the associated times of occurrence.

***Table 7.5-3. fdf_apg_altitude Table***

| Column Name | Type | Primary Key | Mandatory |
|---|---|---|---|
| altitude | char(8) | No | No |
| evnt_time | char(14) | No | No |
| evnt_type | char(7) | No | No |
| orb_num | numeric(5) | No | No |

***Table 7.5-4. fdf_apg_altitude_hdr Table***

| Column Name | Type | Primary Key | Mandatory |
|---|---|---|---|
| end_time | char(14) | No | No |
| file_cre_time | char(14) | No | No |
| file_type | char(14) | No | No |
| sate_id | char(8) | No | No |
| start_time | char(14) | No | No |

The FDF Attitute Data Table contains information about predicted spacecraft attitude angles and rates for FOT scheduled maneuver.

***Table 7.5-5. fdf_attitude Table***

| Column Name | Type | Primary Key | Mandatory |
|---|---|---|---|
| data_pt | char(14) | No | Yes |
| man_flg | numeric(1) | No | No |
| pitch | float(9) | No | No |
| q1_quat | char(8) | No | No |
| q2_quat | char(8) | No | No |
| q3_quat | char(8) | No | No |
| q4_quat | char(8) | No | No |
| roll | float(9) | No | No |
| x_rate | char(8) | No | No |
| y_rate | char(8) | No | No |
| yaw | float(9) | No | No |
| z_rate | char(8) | No | No |

*Table 7.5-6. fdf_attitude_hdr Table*

| Column Name | Type | Primary Key | Mandatory |
|---|---|---|---|
| end_time | char(14) | No | No |
| file_cre_time | char(14) | No | No |
| file_type | char(14) | No | No |
| sate_id | char(8) | No | No |
| start_time | char(14) | No | No |
| stepsize | char(5) | No | No |

The FDF CERES Moon Azimuth and Elevation Data Table contains information about the time ordered set of moon azimuth and elevation angles in an instrument defined coordinate frame for the CERES instrument.

*Table 7.5-7. fdf_azm_moon_ceres Table*

| Column Name | Type | Primary Key | Mandatory |
|---|---|---|---|
| azimuth | float(9) | No | No |
| elevation | float(8) | No | No |
| time | char(14) | No | Yes |

*Table 7.5-8. fdf_azm_moon_ceres_hdr Table*

| Column Name | Type | Primary Key | Mandatory |
|---|---|---|---|
| end_time | char(14) | No | No |
| file_cre_time | char(14) | No | No |
| file_type | char(14) | No | No |
| instrument | char(8) | No | No |
| sate_id | char(8) | No | No |
| start_time | char(14) | No | No |
| stepsize | char(5) | No | No |

The FDF MISR Moon Azimuth and Elevation Angle Data Table contains information about the time ordered set of moon azimuth and elevation angles in an instrument defined coordinate frame for the MISR instrument.

*Table 7.5-9. fdf_azm_moon_misr Table*

| Column Name | Type | Primary Key | Mandatory |
|---|---|---|---|
| azimuth | float(9) | No | No |
| elevation | float(8) | No | No |
| time | char(14) | No | Yes |

**Table 7.5-10. fdf_azm_moon_misr_hdr Table**

| Column Name | Type | Primary Key | Mandatory |
|---|---|---|---|
| end_time | char(14) | No | No |
| file_cre_time | char(14) | No | No |
| file_type | char(14) | No | No |
| instrument | char(8) | No | No |
| sate_id | char(8) | No | No |
| start_time | char(14) | No | No |
| stepsize | char(5) | No | No |

The FDF MODIS Moon Azimuth and Elevation Angle Data Table contains information about the time ordered set of moon azimuth and elevation angles in an instrument defined coordinate frame for the MODIS instrument.

**Table 7.5-11. fdf_azm_moon_modis Table**

| Column Name | Type | Primary Key | Mandatory |
|---|---|---|---|
| azimuth | float(9) | No | No |
| elevation | float(8) | No | No |
| time | char(14) | No | Yes |

**Table 7.5-12. fdf_azm_moon_modis_hdr Table**

| Column Name | Type | Primary Key | Mandatory |
|---|---|---|---|
| end_time | char(14) | No | No |
| file_cre_time | char(14) | No | No |
| file_type | char(14) | No | No |
| instrument | char(8) | No | No |
| sate_id | char(8) | No | No |
| start_time | char(14) | No | No |
| stepsize | char(5) | No | No |

The FDF MOPITT Moon Azimuth and Elevation Angle Data Table contains information about the time ordered set of moon azimuth and elevation angles in an instrument defined coordinate frame for the MOPITT instrument.

**Table 7.5-13. fdf_azm_moon_mopitt Table**

| Column Name | Type | Primary Key | Mandatory |
|---|---|---|---|
| azimuth | float(9) | No | No |
| elevation | float(8) | No | No |
| time | char(14) | No | Yes |

*Table 7.5-14. fdf_azm_moon_mopitt_hdr Table*

| Column Name | Type | Primary Key | Mandatory |
|---|---|---|---|
| end_time | char(14) | No | No |
| file_cre_time | char(14) | No | No |
| file_type | char(14) | No | No |
| instrument | char(8) | No | No |
| sate_id | char(8) | No | No |
| start_time | char(14) | No | No |
| stepsize | char(5) | No | No |

The FDF CERES Sun Azimuth and Elevation Data Table contains information about the time ordered set of sun azimuth and elevation angles in an instrument defined coordinate frame for the CERES instrument.

*Table 7.5-15. fdf_azm_sun_ceres Table*

| Column Name | Type | Primary Key | Mandatory |
|---|---|---|---|
| azimuth | float(9) | No | No |
| elevation | float(8) | No | No |
| time | char(14) | No | Yes |

*Table 7.5-16. fdf_azm_sun_ceres_hdr Table*

| Column Name | Type | Primary Key | Mandatory |
|---|---|---|---|
| end_time | char(14) | No | No |
| file_cre_time | char(14) | No | No |
| file_type | char(14) | No | No |
| instrument | char(8) | No | No |
| sate_id | char(8) | No | No |
| start_time | char(14) | No | No |
| stepsize | char(5) | No | No |

The FDF MISR Sun Azimuth and Elevation Data Table contains information about the time ordered set of sun azimuth and elevation angles in an instrument defined coordinate frame for the MISR instrument.

*Table 7.5-17. fdf_azm_sun_misr Table*

| Column Name | Type | Primary Key | Mandatory |
|---|---|---|---|
| azimuth | float(9) | No | No |
| elevation | float(8) | No | No |
| time | char(14) | No | Yes |

*Table 7.5-18. fdf_azm_sun_misr_hdr Table*

| Column Name | Type | Primary Key | Mandatory |
|---|---|---|---|
| end_time | char(14) | No | No |
| file_cre_time | char(14) | No | No |
| file_type | char(14) | No | No |
| instrument | char(8) | No | No |
| sate_id | char(8) | No | No |
| start_time | char(14) | No | No |
| stepsize | char(5) | No | No |

The FDF MODIS Sun Azimuth and Elevation Data Table contains information about the time ordered set of sun azimuth and elevation angles in an instrument defined coordinate frame for the MODIS instrument.

*Table 7.5-19. fdf_azm_sun_modis Table*

| Column Name | Type | Primary Key | Mandatory |
|---|---|---|---|
| azimuth | float(9) | No | No |
| elevation | float(8) | No | No |
| time | char(14) | No | Yes |

*Table 7.5-20. fdf_azm_sun_modis_hdr Table*

| Column Name | Type | Primary Key | Mandatory |
|---|---|---|---|
| end_time | char(14) | No | No |
| file_cre_time | char(14) | No | No |
| file_type | char(14) | No | No |
| instrument | char(8) | No | No |
| sate_id | char(8) | No | No |
| start_time | char(14) | No | No |
| stepsize | char(5) | No | No |

The FDF MOPITT Sun Azimuth and Elevation Data Table contains information about the time ordered set of sun azimuth and elevation angles in an instrument defined coordinate frame for the MOPITT instrument.

*Table 7.5-21. fdf_azm_sun_mopitt Table*

| Column Name | Type | Primary Key | Mandatory |
|---|---|---|---|
| azimuth | float(9) | No | No |
| elevation | float(8) | No | No |
| time | char(14) | No | Yes |

*Table 7.5-22. fdf_azm_sun_mopitt_hdr Table*

| Column Name | Type | Primary Key | Mandatory |
|---|---|---|---|
| end_time | char(14) | No | No |
| file_cre_time | char(14) | No | No |
| file_type | char(14) | No | No |
| instrument | char(8) | No | No |
| sate_id | char(8) | No | No |
| start_time | char(14) | No | No |
| stepsize | char(5) | No | No |

The FDF ESA Sun/Moon Interference Table contains information about the times that the Sun and/or Moon enter the ESA Field Of View (FOV).

*Table 7.5-23. fdf_esa_sunmoon_int Table*

| Column Name | Type | Primary Key | Mandatory |
|---|---|---|---|
| esa_num | numeric(2) | No | Yes |
| int_obj | numeric(2) | No | No |
| start_time | char(14) | No | Yes |
| stop_time | char(14) | No | No |

*Table 7.5-24. fdf_esa_sunmoon_hdr Table*

| Column Name | Type | Primary Key | Mandatory |
|---|---|---|---|
| end_time | char(14) | No | No |
| file_cre_time | char(14) | No | No |
| file_type | char(14) | No | No |
| sate_id | char(8) | No | No |
| start_time | char(14) | No | No |

The FDF FSS Visibility Prediction Data Table contains information about the times that the Sun is visible to the FSS along with corresponding alpha and beta angles.

*Table 7.5-25. fdf_fss_vis Table (1 of 2)*

| Column Name | Type | Primary Key | Mandatory |
|---|---|---|---|
| alpha_aos | float(8) | No | No |
| alpha_los | float(8) | No | No |
| beta_aos | float(8) | No | No |
| beta_los | float(8) | No | No |
| orb_num | numeric(5) | No | Yes |

*Table 7.5-25. fdf_fss_vis Table (2 of 2)*

| Column Name | Type | Primary Key | Mandatory |
|---|---|---|---|
| start_time | char(14) | No | No |
| stop_time | char(14) | No | No |

*Table 7.5-26. fdf_fss_vis_hdr Table*

| Column Name | Type | Primary Key | Mandatory |
|---|---|---|---|
| end_time | char(14) | No | No |
| file_cre_time | char(14) | No | No |
| file_type | char(14) | No | No |
| sate_id | char(8) | No | No |
| start_time | char(14) | No | No |

The FDF Ground Station Contact Times FDF Table contains information about the spacecraft state vectors to GN/WOTS/DSN, and direct playback sites.

*Table 7.5-27. fdf_grd_stat_contimes Table*

| Column Name | Type | Primary Key | Mandatory |
|---|---|---|---|
| end_time | char(14) | No | No |
| grd_statid | char(5) | No | No |
| max_elv_ang | char(7) | No | No |
| start_time | char(14) | No | No |

*Table 7.5-28. fdf_grd_stat_contimes_hdr Table*

| Column Name | Type | Primary Key | Mandatory |
|---|---|---|---|
| file_cre_time | char(14) | No | No |
| file_type | char(14) | No | No |
| sate_id | char(8) | No | No |

The FDF HGA Gimbal Angles Data Table contains information on the High Gain Antenna (HGA) elevation and azimuth angles at fixed time intervals.

***Table 7.5-29. fdf_hga_gim_ang Table (1 of 2)***

| Column Name | Type | Primary Key | Mandatory |
|---|---|---|---|
| azm_ang | float(10) | No | No |
| data_pt | char(14) | No | No |
| elev_ang | float(9) | No | No |
| orb_num | numeric(5) | No | No |
| tdrs_id | char(6) | No | Yes |

***Table 7.5-30. fdf_hga_gim_ang_hdr Table***

| Column Name | Type | Primary Key | Mandatory |
|---|---|---|---|
| end_time | char(14) | No | No |
| file_cre_time | char(14) | No | No |
| file_type | char(14) | No | No |
| sate_id | char(8) | No | No |
| start_time | char(14) | No | No |
| stepsize | char(5) | No | No |

The FDF HGA to TDRSS Viewing Times Data Table contains information on the High Gain Antenna to each TDRS operational for EOS viewing constraints.

***Table 7.5-31. fdf_hga_view_times Table***

| Column Name | Type | Primary Key | Mandatory |
|---|---|---|---|
| aos_time | char(14) | No | No |
| los_time | char(14) | No | No |
| orb_num_aos | numeric(5) | No | No |
| orb_num_los | numeric(5) | No | No |
| tdrs_id | char(6) | No | Yes |

***Table 7.5-32. fdf_hga_view_times_hdr Table***

| Column Name | Type | Primary Key | Mandatory |
|---|---|---|---|
| end_time | char(14) | No | No |
| file_cre_time | char(14) | No | No |
| file_type | char(14) | No | No |
| sate_id | char(8) | No | No |
| start_time | char(14) | No | No |

The FDF Instrument Orbit Events FDF Table contains information about the time ordered set of orbital events, generated in the J2000 coordinate system.

***Table 7.5-33. fdf_inst_orb_evnts Table***

| Column Name | Type | Primary Key | Mandatory |
|---|---|---|---|
| evnt_type | char(32) | No | Yes |
| orb_num | numeric(5) | No | No |
| time | char(14) | No | No |

***Table 7.5-34. fdf_inst_orb_evnt_hdr Table***

| Column Name | Type | Primary Key | Mandatory |
|---|---|---|---|
| end_time | char(14) | No | No |
| file_cre_time | char(14) | No | No |
| file_type | char(14) | No | No |
| sate_id | char(8) | No | No |
| start_time | char(14) | No | No |

The FDF Load Tab Table contains all Load table data.

***Table 7.5-35. fdf_load_tab Table***

| Column Name | Type | Primary Key | Mandatory |
|---|---|---|---|
| tab_field_num | numeric(4) | No | Yes |
| tbl_num | numeric(4) | No | No |
| value | char(22) | No | No |

***Table 7.5-36. fdf_load_tab_hdr Table***

| Column Name | Type | Primary Key | Mandatory |
|---|---|---|---|
| destination | numeric(2) | No | No |
| file_cre_tm | char(14) | No | No |
| file_type | char(14) | No | No |
| oper_start | char(14) | No | No |
| oper_stop | char(14) | No | No |
| sate_id | char(8) | No | Yes |
| tab_name | char(30) | No | No |
| tbl_num | numeric(4) | No | No |
| uplink_start | char(14) | No | No |
| uplink_stop | char(14) | No | No |

The FDF Load Table Number Table retains the number of the FDF product during the bcp process. Each time the bcp encounters a new Load Table product this table will be truncated.

***Table 7.5-37. fdf_load_tab_num Table***

| Column Name | Type | Primary Key | Mandatory |
|---|---|---|---|
| tbl_num | numeric(4) | No | No |

The FDF Predicted Local Sun Time Data Table contains information about the predicted local sun time at the ascending and descending nodes versus time.

***Table 7.5-38. fdf_loc_sun_time Table***

| Column Name | Type | Primary Key | Mandatory |
|---|---|---|---|
| AD_ind | numeric(1) | No | No |
| data_pt | char(14) | No | Yes |
| sun_loc_time | numeric(6) | No | No |

***Table 7.5-39. fdf_loc_sun_time_hdr Table***

| Column Name | Type | Primary Key | Mandatory |
|---|---|---|---|
| end_time | char(14) | No | No |
| file_cre_time | char(14) | No | No |
| file_type | char(14) | No | No |
| sate_id | char(8) | No | No |
| start_time | char(14) | No | No |

The FDF Lunar Beta Angles Data Table contains information about the data values of the lunar beta angle for a given time span.

***Table 7.5-40. fdf_lun_beta_ang Table***

| Column Name | Type | Primary Key | Mandatory |
|---|---|---|---|
| data_pt | char(14) | No | Yes |
| lun_beta_ang | float(8) | No | No |

**Table 7.5-41. fdf_lun_beta_ang_hdr Table**

| Column Name | Type | Primary Key | Mandatory |
|---|---|---|---|
| end_time | char(14) | No | No |
| file_cre_time | char(14) | No | No |
| file_type | char(14) | No | No |
| sate_id | char(8) | No | No |
| start_time | char(14) | No | No |
| stepsize | char(5) | No | No |

The FDF Predicted EOS AM1-1 Ranging Data Table contains information about the spacecraft ranging data file which will give prediction products that will give, for each second in each real-time contact in the requested timespan, an accurate measurement of the spacecraft's range from WSTGT.

**Table 7.5-42. fdf_lun_sol_eclipse Table**

| Column Name | Type | Primary Key | Mandatory |
|---|---|---|---|
| duration | char(6) | No | No |
| ms_eclipse | char(6) | No | No |
| time | char(14) | No | Yes |

**Table 7.5-43. fdf_lun_sol_eclipse_hdr Table**

| Column Name | Type | Primary Key | Mandatory |
|---|---|---|---|
| end_time | char(14) | No | No |
| file_cre_time | char(14) | No | No |
| file_type | char(19) | No | No |
| sate_id | char(8) | No | No |
| start_time | char(14) | No | No |
| stepsize | char(5) | No | No |

The FDF Mass and Center of Mass Location Estimates Data Table contains information about estimates of the EOS AM-1 mass and center of mass locations.

**Table 7.5-44. fdf_mcm_prod Table**

| Column Name | Type | Primary Key | Mandatory |
|---|---|---|---|
| cmx_coord | char(8) | No | No |
| cmy_coord | char(8) | No | No |
| cmz_coord | char(8) | No | No |
| sc_mass | char(4) | No | No |
| time | char(18) | No | Yes |

*Table 7.5-45. fdf_mcm_prod_hdr Table*

| Column Name | Type | Primary Key | Mandatory |
|---|---|---|---|
| end_time | char(18) | No | No |
| file_cre_tm | char(14) | No | No |
| file_type | char(14) | No | No |
| sate_id | char(8) | No | No |
| start_time | char(18) | No | No |

The FDF MODIS FOV Target View Period Data Table contains information about viewing entry exit times for the MODIS field-of-view (FOV) of the project-specified MODIS field campaign sites.

*Table 7.5-46. fdf_modis_fov_tar Table*

| Column Name | Type | Primary Key | Mandatory |
|---|---|---|---|
| end_time | char(14) | No | No |
| site_id | char(5) | No | No |
| start_time | char(14) | No | No |

*Table 7.5-47. fdf_modis_fov_tar_hdr Table*

| Column Name | Type | Primary Key | Mandatory |
|---|---|---|---|
| file_cre_time | char(14) | No | No |
| file_type | char(14) | No | No |
| site_id | char(8) | No | No |

The FDF OMNI to Ground Station Viewing Times Data contains information on the EOS-AM1 antenna to each project specified ground station and DSN/GN/WOTS viewing times.

*Table 7.5-48. fdf_o2g_view_times Table*

| Column Name | Type | Primary Key | Mandatory |
|---|---|---|---|
| aos_time | char(14) | No | No |
| grnd_name | char(6) | No | Yes |
| los_time | char(14) | No | No |
| orb_num_aos | numeric(5) | No | No |
| orb_num_los | numeric(5) | No | No |

*Table 7.5-49. fdf_o2g_view_times_hdr Table*

| Column Name | Type | Primary Key | Mandatory |
|---|---|---|---|
| end_time | varchar(14) | No | No |
| file_cre_time | varchar(14) | No | No |
| file_type | varchar(14) | No | No |
| sate_id | varchar(8) | No | No |
| start_time | varchar(14) | No | No |

The FDF OMNI to TDRSS Viewing Times Data Table contains information on each data record for each possible view from each TDRS to the AM1 Omni antenna for the time span specified in the header record.

*Table 7.5-50. fdf_omni_view_times Table*

| Column Name | Type | Primary Key | Mandatory |
|---|---|---|---|
| aos_time | char(14) | No | No |
| los_time | char(14) | No | No |
| orb_num_aos | numeric(5) | No | No |
| orb_num_los | numeric(5) | No | No |
| tdrs_id | char(6) | No | Yes |

*Table 7.5-51. fdf_omni_tdrs_hdr Table*

| Column Name | Type | Primary Key | Mandatory |
|---|---|---|---|
| end_time | char(14) | No | No |
| file_cre_time | char(14) | No | No |
| file_type | char(14) | No | No |
| sate_id | char(8) | No | No |
| start_time | char(14) | No | No |

The FDF Predicted Orbital Events Data Table contains information about the time ordered set of orbital events, generated in the J2000 coordinate system.

*Table 7.5-52. fdf_orb_evnts Table*

| Column Name | Type | Primary Key | Mandatory |
|---|---|---|---|
| evnt_type | char(32) | No | Yes |
| longitude | char(6) | No | No |
| orb_num | numeric(5) | No | No |
| seq_num | numeric(4) | No | No |
| time | char(14) | No | No |

**Table 7.5-53. fdf_orb_evnts_hdr Table**

| Column Name | Type | Primary Key | Mandatory |
|---|---|---|---|
| end_time | char(14) | No | No |
| file_cre_time | char(14) | No | No |
| file_type | char(14) | No | No |
| sate_id | char(8) | No | No |
| start_time | char(14) | No | No |

The FDF Planned Orbital Maneuver Dataset Data Table contains information about the predicted times of planned spacecraft orbit maneuvers.

**Table 7.5-54. fdf_orb_man_dataset Table**

| Column Name | Type | Primary Key | Mandatory |
|---|---|---|---|
| man_time | char(18) | No | Yes |

**Table 7.5-55. fdf_orb_man_dataset_hdr Table**

| Column Name | Type | Primary Key | Mandatory |
|---|---|---|---|
| end_time | char(18) | No | No |
| file_cre_time | char(14) | No | No |
| file_type | char(14) | No | No |
| sate_id | char(8) | No | No |
| start_time | char(18) | No | No |

The FDF Orbit Adjust Maneuver Request Data Table contains information about the orbital parameters for frozen orbit conditions, ground track limits, and sun synchronous orbit conditions.

**Table 7.5-56. fdf_orb_man_req Table**

| Column Name | Type | Primary Key | Mandatory |
|---|---|---|---|
| duration | char(10) | No | No |
| orb_num | numeric(5) | No | No |
| time | char(18) | No | No |
| type_man | char(2) | No | Yes |
| viol_time | char(14) | No | No |
| viol_type | numeric(2) | No | No |

**Table 7.5-57. fdf_orb_man_req_hdr Table**

| Column Name | Type | Primary Key | Mandatory |
|---|---|---|---|
| end_time | char(18) | No | No |
| file_cre_tm | char(14) | No | No |
| file_type | char(14) | No | No |
| sate_id | char(8) | No | No |
| start_time | char(18) | No | No |

The FDF Orbit Number and Start Times Table contains information about the predicted orbit start (ascending node crossing) times with associated orbit numbers.

**Table 7.5-58. fdf_orbnum_sttime Table**

| Column Name | Type | Primary Key | Mandatory |
|---|---|---|---|
| orb_num | numeric(5) | No | No |
| start_time | char(14) | No | No |

**Table 7.5-59. fdf_orbnum_sttime_hdr Table**

| Column Name | Type | Primary Key | Mandatory |
|---|---|---|---|
| end_time | char(14) | No | No |
| file_cre_time | char(14) | No | No |
| file_type | char(14) | No | No |
| sate_id | char(8) | No | No |
| start_time | char(14) | No | No |

The FDF Ku-Band Oscillator Frequency Report Data Table provides the format for Ku-Band (3.48) of the FDF in Section 3 of the Interface Control Document (ICD).

**Table 7.5-60. fdf_oscilrpt Table (1 of 2)**

| Column Name | Type | Primary Key | Mandatory |
|---|---|---|---|
| data_ind | numeric(1) | No | No |
| freq_type | numeric(1) | No | No |
| data_type | numeric(1) | No | No |
| sic | numeric(4) | No | No |
| vic | numeric(2) | No | No |
| batch_num | numeric(4) | No | No |
| num_points | numeric(4) | No | No |

*Table 7.5-60. fdf_oscilrpt Table (2 of 2)*

| Column Name | Type | Primary Key | Mandatory |
|---|---|---|---|
| start_time | char(12) | No | No |
| end_time | char(12) | No | No |
| trans_freq | numeric(11) | No | No |
| cent_freq | numeric(11) | No | No |
| rec_freq | numeric(11) | No | No |
| sign_freq | char(1) | No | No |
| off_freq | numeric(8) | No | No |
| stand_dev | numeric(9) | No | No |
| spare | char(28) | No | No |

*Table 7.5-61. fdf_oscilrpt_hdr Table*

| Column Name | Type | Primary Key | Mandatory |
|---|---|---|---|
| data_type | numeric(1) | No | No |
| data_ind | numeric(1) | No | No |
| num_batch | numeric(4) | No | No |
| req_date | char(12) | No | No |
| start_time | char(12) | No | No |
| end_time | char(12) | No | No |
| spare | char(78) | No | No |

The FDF Predicted EOS AM-1 Spacecraft Ephemeris Data Table contains information on the spacecraft predicted ephemeris.

*Table 7.5-62. fdf_pre_eos_am1_ephem Table*

| Column Name | Type | Primary Key | Mandatory |
|---|---|---|---|
| data_pt | char(18) | No | Yes |
| x_position | float | No | No |
| x_velocity | float | No | No |
| y_position | float | No | No |
| y_velocity | float | No | No |
| z_position | float | No | No |
| z_velocity | float | No | No |

*Table 7.5-63. fdf_pre_eos_am1_ephem_hdr Table*

| Column Name | Type | Primary Key | Mandatory |
|---|---|---|---|
| end_time | char(18) | No | No |
| file_cre_tm | char(14) | No | No |
| file_type | char(14) | No | No |
| gha_start | float(8) | No | No |
| gha_stop | float(8) | No | No |
| leap_ind | numeric(1) | No | No |
| leap_tm | char(18) | No | No |
| sate_id | char(8) | No | No |
| start_time | char(18) | No | No |
| stepsize | char(7) | No | No |
| utc_tm_adj | char(8) | No | No |

The FDF Predicted TDRS Ephemeris Data Table contains information on the TDRS predicted ephemeris.

*Table 7.5-64. fdf_pre_tdrs_ephem Table*

| Column Name | Type | Primary Key | Mandatory |
|---|---|---|---|
| data_pt | char(18) | No | Yes |
| x_position | float | No | No |
| x_velocity | float | No | No |
| y_position | float | No | No |
| y_velocity | float | No | No |
| z_position | float | No | No |
| z_velocity | float | No | No |

*Table 7.5-65. fdf_pre_tdrs_ephem_hdr Table*

| Column Name | Type | Primary Key | Mandatory |
|---|---|---|---|
| end_time | char(18) | No | No |
| file_cre_tm | char(14) | No | No |
| file_type | char(14) | No | No |
| gha_start | float(8) | No | No |
| gha_stop | float(8) | No | No |
| leap_ind | numeric(1) | No | No |
| leap_tm | char(18) | No | No |
| sate_id | char(8) | No | No |
| start_time | char(18) | No | No |
| stepsize | char(7) | No | No |
| utc_tm_adj | char(8) | No | No |

The FDF MISR Sun and Moon FOV Events Data Table contains information about the time ordered set predicted MISR FOV (Field-of-View) events.

***Table 7.5-66. fdf_ps_fov_evnts_misr Table***

| Column Name | Type | Primary Key | Mandatory |
|---|---|---|---|
| evnt_type | char(32) | No | Yes |
| orb_num | numeric(5) | No | No |
| seq_num | numeric(4) | No | No |
| skymap_num | numeric(8) | No | No |
| time | char(14) | No | No |

***Table 7.5-67. fdf_ps_fov_evnts_misr_hdr Table***

| Column Name | Type | Primary Key | Mandatory |
|---|---|---|---|
| end_time | char(14) | No | No |
| file_cre_time | char(14) | No | No |
| file_type | char(14) | No | No |
| instrument | char(5) | No | No |
| sate_id | char(8) | No | No |
| start_time | char(14) | No | No |

The FDF MODIS Sun and Moon FOV Event Data Table contains information about the time ordered set predicted FOV events.

***Table 7.5-68. fdf_ps_fov_evnts_modis Table***

| Column Name | Type | Primary Key | Mandatory |
|---|---|---|---|
| evnt_type | char(32) | No | Yes |
| orb_num | numeric(5) | No | No |
| seq_num | numeric(4) | No | No |
| skymap_num | numeric(8) | No | No |
| time | char(14) | No | No |

***Table 7.5-69. fdf_ps_fov_evnts_modis_hdr Table***

| Column Name | Type | Primary Key | Mandatory |
|---|---|---|---|
| end_time | char(14) | No | No |
| file_cre_time | char(14) | No | No |
| file_type | char(14) | No | No |
| instrument | char(5) | No | No |
| sate_id | char(8) | No | No |
| start_time | char(14) | No | No |

The FDF Simulated EOS AM-1 Ephemeris Data Table contains information on the spacecraft simulated ephemeris.

***Table 7.5-70. fdf_sim_eos_am1_ephm Table***

| Column Name | Type | Primary Key | Mandatory |
|---|---|---|---|
| data_pt | char(18) | No | Yes |
| x_position | char(17) | No | No |
| x_velocity | char(12) | No | No |
| y_position | char(17) | No | No |
| y_velocity | char(12) | No | No |
| z_position | char(17) | No | No |
| z_velocity | char(12) | No | No |

***Table 7.5-71. fdf_sim_eos_am1_ephm_hdr Table***

| Column Name | Type | Primary Key | Mandatory |
|---|---|---|---|
| end_time | char(18) | No | No |
| file_cre_tm | char(14) | No | No |
| file_type | char(14) | No | No |
| gha_start | float(8) | No | No |
| gha_stop | float(8) | No | No |
| leap_ind | numeric(1) | No | No |
| leap_tm | char(18) | No | No |
| sate_id | char(8) | No | No |
| start_time | char(18) | No | No |
| stepsize | char(7) | No | No |
| utc_tm_adj | char(8) | No | No |

The FDF MISR Sun/Moon FOV Events Table contains information about the time ordered set predicted FOV events for the MISR Instrument.

***Table 7.5-72. fdf_sm_fov_evnts_misr Table***

| Column Name | Type | Primary Key | Mandatory |
|---|---|---|---|
| evnt_type | char(32) | No | Yes |
| orb_num | numeric(5) | No | No |
| seq_num | numeric(4) | No | No |
| time | char(14) | No | No |

*Table 7.5-73. fdf_sm_fov_evnts_misr_hdr Table*

| Column Name | Type | Primary Key | Mandatory |
|---|---|---|---|
| end_time | char(14) | No | No |
| file_cre_time | char(14) | No | No |
| file_type | char(14) | No | No |
| instrument | char(8) | No | No |
| sate_id | char(8) | No | No |
| start_time | char(14) | No | No |

The FDF MODIS Sun/Moon FOV Events Table contains information about the time ordered set predicted FOV events for the MODIS Instrument.

*Table 7.5-74. fdf_sm_fov_evnts_modis Table*

| Column Name | Type | Primary Key | Mandatory |
|---|---|---|---|
| evnt_type | char(32) | No | Yes |
| orb_num | numeric(5) | No | No |
| seq_num | numeric(4) | No | No |
| time | char(14) | No | No |

*Table 7.5-75. fdf_sm_fov_evnts_modis_hdr Table*

| Column Name | Type | Primary Key | Mandatory |
|---|---|---|---|
| end_time | char(14) | No | No |
| file_cre_time | char(14) | No | No |
| file_type | char(14) | No | No |
| instrument | char(8) | No | No |
| sate_id | char(8) | No | No |
| start_time | char(14) | No | No |

The FDF Solar Beta Angles Data Table contains information about the Solar Beta Angles files which contain the data values of the solar beta angle for a given time span.

*Table 7.5-76. fdf_sol_beta_ang Table*

| Column Name | Type | Primary Key | Mandatory |
|---|---|---|---|
| data_pt | char(14) | No | Yes |
| sol_beta_ang | float(8) | No | No |

**Table 7.5-77. fdf_sol_beta_ang_hdr Table**

| Column Name | Type | Primary Key | Mandatory |
|---|---|---|---|
| end_time | char(14) | No | No |
| file_cre_time | char(14) | No | No |
| file_type | char(14) | No | No |
| sate_id | char(8) | No | No |
| start_time | char(14) | No | No |
| stepsize | char(5) | No | No |

The FDF Predicted Spacecraft Altitute Data Table contains information about the altitude data values of the AM1 spacecraft for a given time span.

**Table 7.5-78. fdf_spcrft_altitude Table**

| Column Name | Type | Primary Key | Mandatory |
|---|---|---|---|
| altitude | char(10) | No | No |
| data_pt | char(14) | No | Yes |

**Table 7.5-79. fdf_spcrft_altitude_hdr Table**

| Column Name | Type | Primary Key | Mandatory |
|---|---|---|---|
| end_time | char(14) | No | No |
| file_cre_time | char(14) | No | No |
| file_type | char(14) | No | No |
| sate_id | char(8) | No | No |
| start_time | char(14) | No | No |
| stepsize | char(5) | No | No |

The FDF Predicted Spacecraft Day/Night Length Data Table contains information about the predicted length of the spacecraft day and night.

**Table 7.5-80. fdf_spcrft_dn_len Table**

| Column Name | Type | Primary Key | Mandatory |
|---|---|---|---|
| orb_num_day | numeric(5) | No | No |
| orb_num_nite | numeric(5) | No | No |
| sc_len_day | numeric(6) | No | No |
| sc_len_nit | numeric(6) | No | No |
| sc_time_day | char(14) | No | No |
| sc_time_nit | char(14) | No | No |

**Table 7.5-81. fdf_spcrft_dn_len_hdr Table**

| Column Name | Type | Primary Key | Mandatory |
|---|---|---|---|
| end_time | char(14) | No | No |
| file_cre_time | char(14) | No | No |
| file_type | char(14) | No | No |
| sate_id | char(8) | No | No |
| start_time | char(14) | No | No |

The FDF SSST Star Interface Data Table contains information about interference of each SSST with bright objects that enter the FOV.

**Table 7.5-82. fdf_ssst_star Table**

| Column Name | Type | Primary Key | Mandatory |
|---|---|---|---|
| fov_entry | char(16) | No | No |
| fov_exit | char(16) | No | No |
| int_start | char(16) | No | No |
| int_stop | char(16) | No | No |
| int_type | numeric(2) | No | No |
| star_id | char(8) | No | Yes |

**Table 7.5-83. fdf_ssst_star_hdr Table**

| Column Name | Type | Primary Key | Mandatory |
|---|---|---|---|
| end_time | char(16) | No | No |
| file_cre_time | char(14) | No | No |
| file_type | char(14) | No | No |
| sate_id | char(8) | No | No |
| ssst_id | numeric(1) | No | No |
| start_time | char(16) | No | No |

The FDF Star Density Profile Data Table provides statistical representation information for the star density of each orbit.

**Table 7.5-84. fdf_star_den_prof Table**

| Column Name | Type | Primary Key | Mandatory |
|---|---|---|---|
| avg_orb_ang | float | No | No |
| max_orb_ang | float | No | No |
| min_orb_ang | float | No | No |
| orb_num | numeric(5) | No | Yes |
| start_time | char(14) | No | Yes |

*Table 7.5-85. fdf_star_den_hdr Table*

| Column Name | Type | Primary Key | Mandatory |
|---|---|---|---|
| end_time | char(14) | No | No |
| file_cre_time | char(14) | No | No |
| file_type | char(14) | No | No |
| sate_id | char(8) | No | No |
| sssi_id | numeric(1) | No | No |
| start_time | char(14) | No | No |

The FDF Predicted Sub-Satellite Point Dataset Data Table contains information about the predicted sub_satellite point on the earth's surface.

*Table 7.5-86. fdf_sub_sate_pt Table*

| Column Name | Type | Primary Key | Mandatory |
|---|---|---|---|
| data_pt | char(14) | No | Yes |
| latitude | numeric(7,4) | No | No |
| longitude | numeric(7,4) | No | No |
| orb_num | numeric(5) | No | No |

*Table 7.5-87. fdf_sub_sate_pt_hdr Table*

| Column Name | Type | Primary Key | Mandatory |
|---|---|---|---|
| end_time | char(14) | No | No |
| file_cre_time | char(14) | No | No |
| file_type | char(14) | No | No |
| sate_id | char(8) | No | No |
| start_time | char(14) | No | No |
| stepsize | char(5) | No | No |

The FDF Validation Log Table contains information about each error generated during FDF Product Validation.

*Table 7.5-88. fdf_val_log Table*

| Column Name | Type | Primary Key | Mandatory |
|---|---|---|---|
| fdf_errmsg | char(80) | No | No |
| fdf_fld | char(16) | No | No |
| fdf_table | char(16) | No | No |
| fdf_value | char(32) | No | No |

The FDF X-Band Interference Times Data Table contains information about the X-band broadcast interference times for EOS-AM1.

***Table 7.5-89. fdf_xband_int_times Table***

| Column Name | Type | Primary Key | Mandatory |
|---|---|---|---|
| dsn_id | char(6) | No | No |
| end_int | char(14) | No | No |
| orb_num | numeric(5) | No | No |
| orb_num_end | numeric(5) | No | No |
| start_int | char(14) | No | No |

***Table 7.5-90. fdf_xband_int_times_hdr Table***

| Column Name | Type | Primary Key | Mandatory |
|---|---|---|---|
| end_time | char(14) | No | No |
| file_cre_time | char(14) | No | No |
| file_type | char(14) | No | No |
| sate_id | char(8) | No | No |
| start_time | char(14) | No | No |
| stepsize | char(5) | No | No |

## 7.6 Fixed Table Data

***Table 7.6-1. activity_severity_fix Table***

| severity_id severity_desc |
|---|
| 1 Informational |
| 2 Warning |
| 3 Alarm |
| 4 Fatal |

***Table 7.6-2. cmdcon_pdb_fix Table***

| con_id | con_name | con_min |
|---|---|---|
| 1 | Bit Rule | 61000 |
| 2 | Comment Rule | 62000 |
| 3 | No Exist Rule | 63000 |
| 4 | Offset Rule | 64000 |
| 5 | Post Rule | 65000 |
| 6 | Pre Rule | 66000 |
| 7 | Scalar Rule | 67000 |

*Table 7.6-3. cmd_type_cfx Table*

| cmd_type |
|---|
| BDU NO-OP |
| BDU Serial CMD |
| BDU Serial CMD En |
| BDU Relay Pulse |
| BDU Logic Pulse |
| ERT Serial |
| ERT Relay Pulse |
| ERT Logic Pulse |
| ERT Load Init |
| ERT Load Init Tbl |
| ERT Load Term |
| ERT Load Data |
| ERT Load File |
| ERT Dump Init |
| ERT Dump Term |
| ERT Dump Manage |
| CTIU BC |

*Table 7.6-4. const_type_tfx Table*

| const_type | ct_desc |
|---|---|
| UB | unsigned byte integer |
| UI | unsigned word integer |
| ULI | unsigned long word integer |
| SB | two's compliment signed byte integer |
| SI | two's compliment signed word integer |
| SLI | two's compliment signed long word integer |
| 1750 | single precision floating point in MIL-STD-1750A format |
| BOOL | boolean value |
| STIM | short time UTC format |
| TIME | standard time UTC format |
| DTIM | standard delta time format |
| CHAR | ASCII character string |

### *Table 7.6-5. conv_type_tfx Table*

| conv_type | ct_desc |
|---|---|
| LINE | linear conversion |
| U_2D | unsegmented second order polynomial |
| U_3D | unsegmented third order polynomial |
| U_4D | unsegmented fourth order polynomial |
| U_5D | unsegmented fifth order polynomial |
| U_6D | unsegmented sixth order polynomial |
| U_7D | unsegmented seventh order polynomial |
| U_EXP | unsegmented exponential |
| S_3D | segmented third order polynomial |

### *Table 7.6-6. data_rep_tfx Table*

| data_rep | dr_desc |
|---|---|
| UI | unsigned word integer |
| SI | two's compliment signed word integer |
| FL | single precision floating point in MIL-STD-1750A format |

### *Table 7.6-7. derived_oper_tfx Table*

| drv_oper | oper_desc |
|---|---|
| + | addition |
| - | subtraction |
| - | negation |
| * | multiplication |
| / | division |
| SIN | sine |
| ASIN | arcsin |
| COS | cosine |
| ACOS | arccosine |
| TAN | tangent |
| ATAN | arctangent |
| = | equal to |
| != | not equal to |
| < | less than |
| <= | less than or equal to |
| > | greater than |
| >= | greater than or equal to |
| && | logical AND |
| \|\| | logical OR |
| ! | logical NOT |

*Table 7.6-8. event_severity_fix Table*

| severity_id | severity_desc |
|---|---|
| 1 | Informational |
| 2 | Warning |
| 3 | Alarm |
| 4 | Fatal |

*Table 7.6-9. file_loc_fix*

| location_id | description |
|---|---|
| 1 | Local |
| 2 | Long Term |
| 3 | Both |

*Table 7.6-10. file_types_fix Table (1 of 2)*

| types | path | duration |
|---|---|---|
| 1 | activities | 7 |
| 2 | activitiesdef | 7 |
| 3 | baps | 7 |
| 4 | bin | 7 |
| 5 | config | 7 |
| 6 | dbinit | 7 |
| 7 | displaydefs | 7 |
| 8 | dumps | 7 |
| 9 | events | 7 |
| 10 | fdf | 7 |
| 11 | helpdocs | 7 |
| 12 | hpbin | 7 |
| 13 | ltip | 7 |
| 14 | ltsp | 7 |
| 15 | odf | 7 |
| 16 | pdb | 7 |
| 17 | plans | 7 |
| 18 | reports | 7 |
| 19 | requestfiles | 7 |
| 20 | resourcestates | 7 |
| 21 | results | 7 |
| 22 | roomdef | 7 |
| 23 | scripts | 7 |
| 24 | statistics | 7 |
| 25 | tlmarchive | 7 |
| 26 | loads/atc | 7 |

*Table 7.6-10. file_types_fix Table (2 of 2)*

| types | path | duration |
|---|---|---|
| 27 | loads/rts | 7 |
| 28 | loads/mp | 7 |
| 29 | loads/fsw | 7 |
| 30 | loads/table | 7 |
| 31 | loadcontents | 7 |
| 32 | dumps/formatted | 7 |
| 33 | buffers | 7 |
| 34 | dmsreports | 7 |
| 35 | dmsbackups | 7 |
| 36 | datasets | 7 |
| 37 | anlproducts | 7 |
| 38 | anlalgorithms | 7 |
| 39 | procedures | 7 |
| 40 | memimages | 7 |
| 41 | reports/load | 7 |
| 42 | reports/image | 7 |
| 43 | reports/compare | 7 |
| 44 | reports/model | 7 |
| 45 | reports/catalog | 7 |
| 46 | reports/integrated | 7 |
| 47 | reports/table | 7 |
| 48 | groundsched | 7 |
| 49 | dumpdata | 7 |
| 50 | dumploads | 7 |
| 51 | asusedgroundscript | 7 |
| 52 | reports/scs | 7 |
| 53 | scsbinary | 7 |
| 54 | reports/usccsclock | 7 |
| 55 | reports/rddclock | 7 |
| 56 | reports/solidstate | 7 |
| 57 | reports/constraint | 7 |
| 58 | reports/timeordered | 7 |
| 59 | reports/outoflimits | 7 |
| 60 | reports/userstats | 7 |
| 61 | reports/systemstats | 7 |
| 62 | reports/timeline | 7 |
| 63 | reports/schedule | 7 |
| 64 | reports/contacts | 7 |
| 65 | reports/dump | 7 |
| 66 | reports/cmddatablocks | 7 |
| 67 | reports/clcw | 7 |

### *Table 7.6-11. fos_sc_id Table*

| scid |
|---|
| AM1 |

### *Table 7.6-12. fos_subsys_fix Table*

| subsys_id | subsys_ac | ss_offset | ss_mask_pad | event_min | event_max |
|---|---|---|---|---|---|
| 1 | ANL | 1000000000 | NULL | 1 | 999 |
| 2 | CMD | 100000000 | 0 | 1000 | 1999 |
| 3 | CMS | 10000000 | 00 | 2000 | 2999 |
| 4 | DMS | 1000000 | 000 | 3000 | 3999 |
| 5 | FUI | 100000 | 0000 | 4000 | 4999 |
| 6 | PAS | 10000 | 00000 | 5000 | 5999 |
| 7 | RCM | 1000 | 000000 | 6000 | 6999 |
| 8 | RMS | 100 | 0000000 | 7000 | 7999 |
| 9 | SYS | 10 | 00000000 | 8000 | 8999 |
| 10 | TLM | 1 | 000000000 | 9000 | 9999 |

### *Table 7.6-13. interface_fix Table*

| interface | description |
|---|---|
| 1 | EDOS Packet |
| 2 | GCMR Packets |
| 3 | GCMR Error Codes |
| 4 | CODA Packet |
| 5 | UPD Message Packets |
| 6 | UPD Performance Pack |
| 7 | UPD Comm Packets |
| 8 | UPD Request Packets |

### *Table 7.6-14. parm_type_fix Table*

| parm_type | parm_desc |
|---|---|
| AI | Analog Integer |
| AR | Analog Real |
| AS | Analog String |
| AT | Analog Time |
| DS | Discrete |
| LS | List |

*Table 7.6-15. rt_name_cfx Table*

| rt_name | rt_id |
|---|---|
| ASTER | 13 |
| ASTER BDU | 22 |
| Active CTIU | NULL |
| C&DH/COMM BDU | 16 |
| CERES-A | 10 |
| CERES-F | 9 |
| CTIU1 | 1 |
| CTIU2 | 2 |
| DAS BDU | 20 |
| GN&C BDU | 18 |
| HGA-1 | 7 |
| HGA-2 | 8 |
| MISR | 14 |
| MIS/MOP/CER BDU | 24 |
| MODIS | 12 |
| MODIS BDU | 23 |
| MOPITT | 11 |
| N/A | NULL |
| Power BDU | 19 |
| PROP BDU | 15 |
| Recorder BDU | 17 |
| RWA BDU | 21 |
| SCC1 | 5 |
| SCC2 | 6 |
| SSST1 | 3 |
| SSST2 | 4 |
| Standby CTIU | NULL |

*Table 7.6-16. tbl_type_cfx Table*

| tbl_type |
|---|
| ADAC |
| NAV |
| EPS |
| FSW |

*Table 7.6-17. unit_conv_fix Table (1 of 3)*

| data_unit | unit_cat | unit_fmt | unit_type |
|---|---|---|---|
| A | amp | 74 | 14 |
| AM2 | amp-meter2 | 0 | 0 |
| ANY | arbitrary | 0 | 0 |
| APC | amp/count | 0 | 0 |
| AS | arc second | 0 | 0 |
| AS2 | arc second/second | 0 | 0 |
| ATM | atmosphere | 0 | 0 |
| BPM | beat/min | 0 | 0 |
| BPS | beat/second | 0 | 0 |
| C | degree Celcius | 69 | 13 |
| CM | centimeter | 0 | 0 |
| CM2 | centimeter2 | 0 | 0 |
| CM3 | centimeter3 | 0 | 0 |
| CNT | count | 0 | 0 |
| COU | coulomb | 0 | 0 |
| CPA | count/amp | 0 | 0 |
| DAY | day of month | 0 | 0 |
| DB | decibal | 0 | 0 |
| DBH | decibal-hertz | 0 | 0 |
| DBM | decibal-meter | 0 | 0 |
| DBW | decibal-watt | 0 | 0 |
| DEG | degree of arc | 15 | 3 |
| DEG | degree/second | 0 | 0 |
| DN | data number | 0 | 0 |
| DOY | day of year | 0 | 0 |
| DPS | degree/second | 0 | 0 |
| DS2 | degree second2 | 0 | 0 |
| F | degree Farenheit | 70 | 0 |
| FAR | Faraday | 0 | 0 |
| FPM | feet/min | 0 | 0 |
| FPS | feet/seconds | 0 | 0 |
| FT | feet | 31 | 6 |
| FT2 | feet2 | 36 | 7 |
| G | gravitation | 0 | 0 |
| G2 | gauss2 | 0 | 0 |
| GAL | gallon | 0 | 0 |
| GHZ | gigahertz | 0 | 0 |
| GM | gram | 26 | 5 |
| GPC | gauss/count | 0 | 0 |

*Table 7.6-17. unit_conv_fix Table (2 of 3)*

| data_unit | unit_cat | unit_fmt | unit_type |
|---|---|---|---|
| HR | hour | 0 | 0 |
| HZ | hertz | 0 | 0 |
| HZ2 | hertz2 | 0 | 0 |
| IN2 | inche2 | 0 | 0 |
| IN3 | inche3 | 0 | 0 |
| J | joule | 102 | 20 |
| JM2 | joule/meter2 | 0 | 0 |
| K | degree Kelvin | 68 | 13 |
| KG | kilogram | 25 | 5 |
| KHZ | kilohertz | 0 | 0 |
| KM | kilometer | 45 | 9 |
| KM2 | kilometer2 | 0 | 0 |
| KPH | kilometer/hour | 53 | 10 |
| KPM | kilometer/min | 0 | 0 |
| KPS | kilometer/second | 52 | 10 |
| KV | kilovolt | 0 | 0 |
| KW | kilowatt | 0 | 0 |
| KWH | kilowatt-hour | 0 | 0 |
| L | liter | 0 | 0 |
| LM | lumen | 0 | 0 |
| LX | lux | 0 | 0 |
| M | meter | 30 | 6 |
| M2 | meter2 | 35 | 7 |
| MA | milliamp | 75 | 14 |
| MB | millibar | 0 | 0 |
| MG | milligram | 0 | 0 |
| MHZ | megahertz | 0 | 0 |
| MI | mile | 0 | 0 |
| MIC | | 0 | 0 |
| MIN | minute | 0 | 0 |
| ML | milliliter | 0 | 0 |
| MM | millimeter | 0 | 0 |
| MON | month | 0 | 0 |
| MPH | miles/hour | 0 | 0 |
| MPS | miles/second | 0 | 0 |
| MS | millisecond | 0 | 0 |
| MV | millivolt | 80 | 15 |
| N | newton | 93 | 18 |
| NM | nanometer | 0 | 0 |
| NM2 | newton/meter2 | 0 | 0 |

*Table 7.6-17. unit_conv_fix Table (3 of 3)*

| data_unit | unit_cat | unit_fmt | unit_type |
|---|---|---|---|
| NMI | nautical mile | 0 | 0 |
| NMS | newton-meter-sec | 0 | 0 |
| NT | newton | 93 | 18 |
| OHM | ohm | 84 | 16 |
| OZI | ounce-inch | 0 | 0 |
| PC | pole centimeter | 0 | 0 |
| PHO | photon | 0 | 0 |
| PSI | pound/inch2 | 0 | 0 |
| QT | quart | 0 | 0 |
| R2S | radian2/second2 | 0 | 0 |
| RAD | radian | 14 | 3 |
| RDS | radian-second | 118 | 24 |
| RPC | radian/count | 0 | 0 |
| RPM | revolution/min | 0 | 0 |
| RPS | revolution/second | 0 | 0 |
| RS2 | radian/second2 | 0 | 0 |
| SEC | second | 0 | 0 |
| SPF | second/frame | 0 | 0 |
| T | Torr | 0 | 0 |
| T2 | tesin2 | 0 | 0 |
| UM | micrometer | 0 | 0 |
| US | microsecond | 0 | 0 |
| V | volt | 79 | 15 |
| W | watt | 110 | 22 |
| WK | week | 0 | 0 |
| YR | year | 0 | 0 |

*Table 7.6-18. unit_format_fix Table (1 of 4)*

| unit_format_id | unit_format_desc |
|---|---|
| 0 | Unknown Format |
| 1 | Time - MilliSecond |
| 2 | Time - NanoSecond |
| 3 | Time - Second |
| 5 | Time - HMS |
| 6 | Time - MKS |
| 7 | Time - CGS |
| 8 | Time - English |
| 9 | Date - Julian |
| 10 | Date - Grerian |
| 11 | Date - MKS |
| 12 | Date - CGS |
| 13 | Date - English |
| 14 | Angles - Radians |
| 15 | Angles - Degrees |
| 16 | Angles - Gradians |
| 17 | Angles - Degree Minutes/Seconds |
| 18 | Angles - MKS |
| 19 | Angles - CGS |
| 20 | Angles - English |
| 21 | Angles - Steradian |
| 22 | Angles - MKS |
| 23 | Angles - CGS |
| 24 | Angles - English |
| 25 | Mass - KGrams |
| 26 | Mass - Grams |
| 27 | Mass - MKS |
| 28 | Mass - CGS |
| 29 | Mass - English |
| 30 | Length - Meters |
| 31 | Length - Feet |
| 32 | Length - MKS |
| 33 | Length - English |
| 34 | Length - English |
| 35 | Area - MetersSq |
| 36 | Area - FeetSq |
| 37 | Area - MKS |
| 38 | Area - CGS |
| 39 | Area - English |

*Table 7.6-18. unit_format_fix Table (2 of 4)*

| unit_format_id | unit_format_desc |
|---|---|
| 40 | Volume - MetersCb |
| 41 | Volume - FeetCb |
| 42 | Volume - MKS |
| 43 | Volume - CGS |
| 44 | Volume - English |
| 45 | Distance - KiloMtr |
| 46 | Distance - NauticalMiles |
| 47 | Distance - StatutoryMiles |
| 48 | Distance - MKS |
| 49 | Distance - CGS |
| 50 | Distance - English |
| 51 | Velocity - MetersPerSecond |
| 52 | Velocity - KiloMetersPerSecond |
| 53 | Velocity - KiloMetersPerHour |
| 54 | Velocity - FeetPerSecond |
| 55 | Velocity - MilesPerHour |
| 56 | Velocity - NMilesPerHour |
| 57 | Velocity - MKS |
| 58 | Velocity - CGS |
| 59 | Velocity - English |
| 60 | Acceleration - MeterPerSecondSq |
| 61 | Acceleration - MKS |
| 62 | Acceleration - CGS |
| 63 | Acceleration - English |
| 64 | Momentum - KgMeterPerSecond |
| 65 | Momemtum - MKS |
| 66 | Momentum - CGS |
| 67 | Momemtum - English |
| 68 | Temperature - Kelvin |
| 69 | Temperature - Celcius |
| 70 | Temperature - Fahrenheit |
| 71 | Temperature - MKS |
| 72 | Temperature - CGS |
| 73 | Temperature - English |
| 74 | Current - Amps |
| 75 | Current - MilliAmps |
| 76 | Current - MKS |
| 77 | Current - CGS |
| 78 | Current - English |
| 79 | Voltage - Volts |

*Table 7.6-18. unit_format_fix Table (3 of 4)*

| unit_format_id | unit_format_desc |
|---|---|
| 80 | Voltage - MilliVolts |
| 81 | Voltage - VoltsMKS |
| 82 | Voltage - VoltsCGS |
| 83 | Voltage - English |
| 84 | Resistance - Ohms |
| 85 | Resistance - MilliOhms |
| 86 | Resistance - MKS |
| 87 | Resistance - CGS |
| 88 | Resistance - English |
| 89 | Charge/Discharge - AmpHour |
| 90 | Charge/Discharge - MKS |
| 91 | Charge/Discharge - CGS |
| 92 | Charge/Discharge - English |
| 93 | Force - Newton |
| 94 | Force - MKS |
| 95 | Force - CGS |
| 96 | Force - English |
| 97 | Pressure - Pascal |
| 98 | Pressure - LbPSI |
| 99 | Pressure - MKS |
| 100 | Pressure - CGS |
| 101 | Pressure - English |
| 102 | Energy - Joule |
| 103 | Energy - MKS |
| 104 | Energy - CGS |
| 105 | Energy - English |
| 106 | Torque - Joule |
| 107 | Torque - MKS |
| 108 | Torque - CGS |
| 109 | Torque - English |
| 110 | Power - Watt |
| 111 | Power - MKS |
| 112 | Power - CGS |
| 113 | Power - English |
| 114 | Inertia - KgMeterSq |
| 115 | Inertia - MKS |
| 116 | Inertia - CGS |
| 117 | Inertia - English |
| 118 | Angular Velocity - RadPerSec |
| 119 | Angular Velocity - MKS |
| 120 | Angular Velocity - CGS |

*Table 7.6-18. unit_format_fix Table (4 of 4)*

| unit_format_id | unit_format_desc |
|---|---|
| 121 | Angular Velocity - English |
| 122 | Angular Momemtum - KgMeterSqPerSecond |
| 123 | Angular Momemtum - MKS |
| 124 | Angular Momemtum - CGS |
| 125 | Angular Momemtum - English |
| 126 | Magnetic Flux - Weber |
| 127 | Magnetic Flux - MKS |
| 128 | Magnetic Flux - CGS |
| 129 | Magnetic Flux - English |
| 130 | Magnetic Induction - Tesla |
| 131 | Magnetic Induction - MKS |
| 132 | Magnetic Induction - CGS |
| 133 | Magnetic Induction - English |
| 134 | Magnetic Field Strength - AmpMeter |
| 135 | Magnetic Field Strength - MKS |
| 136 | Magnetic Field Strength - CGS |
| 137 | Magnetic Field Strength - English |
| 138 | Magnetic Moment - JoulePerTesla |
| 139 | Magnetic Moment - MKS |
| 140 | Magnetic Moment - CGS |
| 141 | Magnetic Moment- English |
| 142 | Magnetic Dipole Moment - DpWeberMeter |
| 143 | Magnetic Dipole Moment - MKS |
| 144 | Magnetic Dipole Moment - CGS |
| 145 | Magnetic Dipole Moment - English |

*Table 7.6-19. unit_type_fix Table*

| unit_type_id | unit_type_desc |
|---|---|
| 0 | Unknown Type |
| 1 | Time |
| 2 | Date |
| 3 | Angle |
| 4 | Solid Angle |
| 5 | Mass |
| 6 | Length |
| 7 | Area |
| 8 | Volume |
| 9 | Distance |
| 10 | Velocity |
| 11 | Acceleration |
| 12 | Momentum |
| 13 | Temperature |
| 14 | Current |
| 15 | Voltage |
| 16 | Resistance |
| 17 | Charge |
| 18 | Force |
| 19 | Pressure |
| 20 | Energy |
| 21 | Torque |
| 22 | Power |
| 23 | Inertia |
| 24 | Angular Velocity |
| 25 | Angular Momentum |
| 26 | Magnetic Flux |
| 27 | Magnetic Induction |
| 28 | Magnetic Field |
| 29 | Magnetic Moment |
| 30 | Magnetic Dipole |

*Table 7.6-20. value_type_cfx Table*

| value_type |
|---|
| UI |
| ULI |
| 1750 |

# 8. Database Backup and Recovery Procedures

There are different kinds of database failures. In the case of system failure, such as power outages or SQL Server failure, recovery is automatic and requires no DBA intervention. However, in the event that there is a media failure, DBA intervention is required. In order for the DBA to recover the database to the point in time of failure, the database must have been configured, and the data in the database must have been backed up, to support such a recovery.

To ensure that a full recovery can be done, the master database and the log tables (syslogs) must be mirrored to a second disk. If there is a loss of one of the disks, the mirrored files can be used for recovery. Also, a good backup strategy should include frequent backups of the master database, the master log, the model database, and all databases and associated transaction logs on the Server. The "dbcc" (database consistency checker) program should be run prior to backups to verify the integrity of the databases.

## 8.1 Backup Procedures

There must be a Backup Server running on the same system as the SQL Server which performs the backup task.

The "dump database" command is the command used to back up an entire database and the transaction log. The file output as a result of this command can then be backed up using an operating system backup. The "dump database" command can be run while users are actively using the database.

The "dump transaction" command is the command used to back up the transaction log only. This is the command used for incremental backups. Unlike the "dump database" command, the "dump transaction" command causes the transaction log to get pruned (i.e., cleans out committed transactions).

A “Database Backups” option on the Database Utilities screen executes UNIX scripts to perform the dumps of the FOS Databases and/or Database Logs. Database backups should be performed weekly and Database Logs should be backed up nightly.

In addition to routine backups, log thresholds are set on the database to dump the logs when they become 50% full. A message is then displayed to the console to perform database backups. If the “last chance” threshold is crossed, the SQL Server suspends writes to the logs, placing an error in the error log for all suspended transactions, and executes a stored procedure "sp_thresholdaction", which will perform a "dump transaction". A message is then displayed to the console to run the backup procedures.

## 8.2 Recovery Procedures

The "load database" command is the command used to replace existing contents in a database with data from a dumped image created with the "dump database" command. There can be no active users at the time of the load.

The "load transaction" command reads a previously backed up copy of the transactions log into the current transactions log as a means of recovery. The transaction log backups must be loaded in the order that they were done.

If the master database gets damaged, it can be rebuilt using the "buildmaster" program, if you have current backups. This program needs to be run in a single-user mode, with the SQL Server down. The "dbcc" program should always be run on each database after running "buildmaster" to ensure the consistency of the database.

# Appendix A. Sizing Requirements

Tables begin on the next page.

*Table A-1. Application Sizing Requirement*

| File or Table | Rqmt Id | File Size | Units | Duration | Total (MB) | SDPS Export Freq. | Description | Sybase or File | Public or Private | Cfg Ctrl | IST Init |
|---|---|---|---|---|---|---|---|---|---|---|---|
| FOS executables | | 1000 | | Mission | 1000 | | Executables for all FOS subsystems | FILE | PUBLIC | YES | YES |
| P&S libraries | | 10 | | Mission | 10 | | Phigs 2.0 | FILE | PUBLIC | YES | NO |
| | | 10 | | Mission | 10 | | XGL 2.0 | FILE | PUBLIC | YES | NO |
| | | 50 | | Mission | 50 | | (HCL,RCL,etc) | FILE | PUBLIC | YES | NO |
| Graphics software | | 20 | | Mission | 20 | | IDL/PVWAVE | FILE | PUBLIC | YES | YES |
| Expert system S/W | | 20 | | Mission | 20 | | G2,Rtworks | FILE | PUBLIC | YES | NO |
| Sybase | | 50 | | Mission | 50 | | Sybase executables | FILE | PUBLIC | YES | NO |
| Build Xcessory | | 20 | | Mission | 20 | | FUI Tools | FILE | PUBLIC | YES | NO |
| DBTools | | 5 | | Mission | 5 | | Sybase interface tools | FILE | PUBLIC | YES | YES |
| RogueWave | | 10 | | Mission | 10 | | Base class tool | FILE | PUBLIC | YES | YES |
| | | | | | | | | | | | |
| | | | | | | | | | | | |
| **TOTAL** | | | | | **1195** | | | | | | |
| | | | | | | | | | | | |

*Table A-2. Planning & Scheduling Sizing Requirements (1 of 4)*

| File or Table | Rqmt ID | File Size | Units | EOC Archive Duration | Total (MB) | SDPS Export Freq. | Description | Sybase or File | Public or Private | Cfg Ctrl | IST Init File |
|---|---|---|---|---|---|---|---|---|---|---|---|
| Activity Definitions | F-PAS-00300 | 0.04 | 250 | Mission | 10 | weekly | 1 MB simple instr, 2.0MB complex, 1 all S/C subsystems | SYBASE | PUBLIC | YES | NO |
| Baseline Activity Profile Definition | F-PAS-00600 | 0.05 | 40 | | | | Definitions of baseline activities | SYBASE | PUBLIC | YES | NO |
| LTSP | F-PAS-00010 | 0.5 | 1 | half year | 0.5 | weekly | IWG science guidelines | SYBASE | PUBLIC | YES | NO |
| LTIP | F-PAS-00020 | 0.2 | 5 | half year | 1 | weekly | IWG science guidelines | SYBASE | PUBLIC | YES | NO |
| L/T SC ops plan | F-PAS-00015 | 1 | 1 | half year | 1 | weekly | all s/c subsystems | SYBASE | PUBLIC | YES | NO |
| Schedule Activities | F-PAS-00300 | 400 | 1 | 2 weeks | 400 | weekly | Activities that have been scheduled into the master of what-if mission plans, along with their scheduling information | SYBASE | PUBLIC | NO | NO |
| Plans | F-PAS-00160 | 2 | 1 | 2 weeks | 2 | weekly | Master and what-if plan names, including access informaiton | SYBASE | PUBLIC | YES | NO |
| Resources | F-PAS-00940 | 1 | 1 | 2 weeks | 1 | weekly | Instrument and subsystem names, including modeling information | SYBASE | PUBLIC | YES | NO |
| Schedulable Resources | F-PAS-00940 | 1 | 1 | 2 weeks | 1 | weekly | Scheduling component of resource | SYBASE | PUBLIC | YES | NO |
| Resource States | F-PAS-00940 | 600 | 1 | 2 weeks | 600 | weekly | Instrument and subsystem states as a function of time | SYBASE | PUBLIC | NO | NO |

*Table A-2. Planning & Scheduling Sizing Requirements (2 of 4)*

| File or Table | Rqmt ID | File Size | Units | EOC Archive Duration | Total (MB) | SDPS Export Freq. | Description | Sybase or File | Public or Private | Cfg Ctrl | IST Init File |
|---|---|---|---|---|---|---|---|---|---|---|---|
| Constraints | F-PAS-00910 | 5 | 1 | 2 weeks | 5 | weekly | User defined activity level constraints for the instruments and subsystems | SYBASE | PUBLIC | YES | NO |
| Resource Associations | F-PAS-00940 | 1 | 1 | 2 weeks | 1 | weekly | Establishes associations between resources | SYBASE | PUBLIC | YES | NO |
| Configuration Files | F-PAS-00100 | 0.05 | 20 | 2 weeks | 1 | weekly | Configuration files needed for process initialization and set up | FILE | PUBLIC | NO | Yes |
| Orbit Data | F-PAS-00137 | | | | | | | | | | |
| 1)Simulated Spacecraft Ephemeris | | 50 | 1 | 2 weeks | 50 | never | Simulated ephemeris data used prelaunch for simulation and testing | SYBASE | PUBLIC | NO | NO |
| 2)OMNI to TDRSS Viewing Times | | 5 | 1 | 2 weeks | 5 | weekly | Viweing time from the OMNI antenna to each of the TDRSS spacecraft | SYBASE | PUBLIC | NO | NO |
| 3)HGA to TDRSS Viewing Times | | 5 | 1 | 2 weeks | 5 | weekly | Viewing times from the HGA antenna to each of the TDRSS spacecraft | SYBASE | PUBLIC | NO | NO |
| 4)OMNI to Ground Station Viewing Times | | 5 | 1 | 2 weeks | 5 | weekly | Viewing times from the OMNI antenna to DSN/GN/WTS and other specified ground stations | SYBASE | PUBLIC | NO | NO |

*Table A-2. Planning & Scheduling Sizing Requirements (3 of 4)*

| File or Table | Rqmt ID | File Size | Units | EOC Archive Duration | Total (MB) | SDPS Export Freq. | Description | Sybase or File | Public or Private | Cfg Ctrl | IST Init File |
|---|---|---|---|---|---|---|---|---|---|---|---|
| 5)HGA Gimbal Angles | | 15 | 1 | 2 weeks | 15 | weekly | HGA antenna alpha and beta angles to each TDRSS | SYBASE | PUBLIC | NO | NO |
| 6)Predicted EOS-AM Ephemeris | | 100 | 1 | 2 weeks | 100 | weekly | Predicted AM-1 Ephemeris data | SYBASE | PUBLIC | NO | NO |
| 7)Predicted TDRSS Ehemeris | | 50 | 1 | 2 weeks | 50 | weekly | Predicted Ephemeris data to each TDRSS | SYBASE | PUBLIC | NO | NO |
| 8)Orbit Adjust Maneuver Request | | 1 | 1 | 2 weeks | 1 | as needed | Notifcation to provide orbit adjust due to ground track limits, sun synch orbit conditions and orbit parameters for frozen oribit conditions | SYBASE | PUBLIC | NO | NO |
| 9)TDRSS Navigation Contact Guidelines | | 4 | 1 | 2 weeks | 4 | as needed | Guidelines pertaining to the selection of TDRS navigation contacts | SYBASE | PUBLIC | NO | NO |
| 10)Attitude Predictions | | 5 | 1 | 2 weeks | 5 | as needed | EOS predicted attitude data reflecting maneuver offsets | SYBASE | PUBLIC | NO | NO |
| 11)Orbit Planning Aids | | 50 | 1 | 2 weeks | 50 | weekly | EOS predicted events over a user specified time | SYBASE | PUBLIC | NO | NO |
| ASTER_ICC/EOC ICD | | | | | | | | | | | |

*Table A-2. Planning & Scheduling Sizing Requirements (4 of 4)*

| File or Table | Rqmt ID | File Size | Units | EOC Archive Duration | Total (MB) | SDPS Export Freq. | Description | Sybase or File | Public or Private | Cfg Ctrl | IST Init File |
|---|---|---|---|---|---|---|---|---|---|---|---|
| 1)ASTER Short Tem Schedule | | 7 | 4 | 2 weeks | 28 | weekly | Contains a list of ASTER activities and resource requests required by the ASTER instrument during the Target Week | SYBASE | PUBLIC | NO | NO |
| 2)ASTER Short Term Schedule Update | | 1 | 12 | 2 weeks | 12 | weekly | ASTER activities and resource requests that modify a previously submitted ASTER Short Term Schedule | SYBASE | PUBLIC | NO | NO |
| 3)ASTER One Day Schedule | | 1 | 7 | 2 weeks | 7 | weekly | Contains a list of ASTER activities with scheduling information for a target day | SYBASE | PUBLIC | NO | NO |
| 4)ASTER One Day Schedule Update | | 0.2 | 21 | 2 weeks | 4.2 | weekly | ASTER activities with scheduling information that modify a previously submitted ASTER One Day Schedule | SYBASE | PUBLIC | NO | NO |
| | | | | | | | | | | | |
| **TOTAL** | | | | | **1023.5** | | | | | | |
| | | | | | | | | | | | |

*Table A-3. Command Management Sizing Requirements (1 of 3)*

| File or Table | Rqmt ID | File Size | Units | Duration | Total (MB) | SDPS Export Freq. | Description | Sybase or File | Public or Private | Cfg Ctrl | IST Init File |
|---|---|---|---|---|---|---|---|---|---|---|---|
| Integrate report | F-CMS-01515 | 1.5 | 7 | 7 days | 10.5 | daily | orb events, cmd exe times, TDRS contacts | FILE | PUBLIC | NO | NO |
| ATC Loads | F-CMS-00105 | 0.004 | 18 | 7 days | 0.072 | daily | Absolute Time Command | FILE | PUBLIC | NO | NO |
| ATC Load Report | F-CMS-00245 | 0.173 | 18 | 7 days | 3.105 | daily | Report of ATC Load | FILE | PUBLIC | NO | NO |
| Memory Map Report | F-CMS-00510 | 2.25 | 1 | 7 days | 2.25 | daily | Report of S/C Memory | FILE | PUBLIC | NO | NO |
| Ground Script | F-CMS-00610 | 0.5 | 7 | 7 days | 3.5 | daily | List of ground directives | FILE | PUBLIC | NO | NO |
| SC-cmnded state table | F-CMS-00650 | 0.01 | 33 | 7 days | 0.33 | daily | State of S/C | FILE | PUBLIC | NO | NO |
| RTS Load | F-CMS-00710 | 0.001 | 128 | Mission | 0.128 | daily | Relative Time Sequence | FILE | PUBLIC | NO | NO |
| RTS Catalog Report | F-CMS-00920 | 0.5 | 1 | Mission | 0.5 | daily | Report of RTS Load | FILE | PUBLIC | NO | NO |
| RTS Map | F-CMS-00925 | 0.5 | 1 | Mission | 0.5 | daily | Map of current RTS Load | FILE | PUBLIC | NO | NO |
| RTS Map Report | F-CMS-00930 | 1.5 | 1 | Mission | 1.5 | daily | Report of current RTS Map | FILE | PUBLIC | NO | NO |
| Table Loads | F-CMS-01010 | 0.05 | 95 | Mission | 4.75 | daily | Loaded into S/C Table | FILE | PUBLIC | NO | NO |
| Mic. Load Report | F-CMS-01310 | 0.18 | 1 | Mission | 0.18 | daily | Instrument Memory Report | FILE | PUBLIC | NO | NO |
| Flight Software Load | F-CMS-01410 | 0.2 | 24 | Mission | 4.8 | daily | SW loaded on S/C | FILE | PUBLIC | NO | NO |
| Ground Ref Image | F-CMS-01710 | 7 | 1 | Mission | 7 | daily | Image of S/C memory | FILE | PUBLIC | NO | NO |
| S/C Mem Dump Image | F-CMS-01715 | 7 | 1 | Mission | 7 | daily | Dump from S/C | FILE | PUBLIC | NO | NO |
| Instr. Mem Dump Image | F-CMS-01725 | 7 | 5 | Mission | 35 | daily | Dump from Instrument | FILE | PUBLIC | NO | NO |

*Table A-3. Command Management Sizing Requirements (2 of 3)*

| File or Table | Rqmt ID | File Size | Units | Duration | Total (MB) | SDPS Export Freq. | Description | Sybase or File | Public or Private | Cfg Ctrl | IST Init File |
|---|---|---|---|---|---|---|---|---|---|---|---|
| Memory Image Report | F-CMS-01760 | 14 | 7 | Mission | 98 | daily | Report of one of the instruments memory | FILE | PUBLIC | NO | NO |
| Load Catalog | F-CMS-00205 | 1 | 1 | Mission | 1 | daily | maintains catalog entry info | SYBASE | PUBLIC | NO | NO |
| ATC command list | F-CMS-00205 | 0.7 | 1 | 7 days | 0.7 | daily | List of ATC's | FILE | PUBLIC | NO | NO |
| ATC load contents | F-CMS-00210 | 0.004 | 18 | 7 days | 0.072 | daily | Current load contents | FILE | PUBLIC | NO | NO |
| Ground schedule | F-CMS-00610 | 12 | 1 | Mission | 12 | daily | Scedule of ground directives | FILE | PUBLIC | NO | NO |
| DAS ID list | F-CMS-00205 | 0.001 | 1 | Mission | 0.001 | daily | Identifies lists of Detailed Activities Schedules | FILE | PUBLIC | NO | NO |
| ATC Buffer (MAP):Actual | F-CMS-00510 | 0.75 | 1 | Mission | 0.75 | daily | Actual status of ATC buffer | FILE | PUBLIC | NO | NO |
| ATC Buffer:Predicted( list) | F-CMS-00530 | 0.75 | 7 | Mission | 5.25 | daily | Predicted status of ATC buffer | FILE | PUBLIC | NO | NO |
| RTS command list | F-CMS-00860 | 0.004 | 128 | Mission | 0.512 | daily | List of RTS commands | FILE | PUBLIC | NO | NO |
| RTS load contents | F-CMS-00710 | 0.001 | 128 | Mission | 0.128 | | Current contents of RTS load | FILE | PUBLIC | NO | NO |
| FSW load contents | F-CMS-01405 | 0.2 | 24 | Mission | 4.8 | daily | Contents of Flight Software | FILE | PUBLIC | NO | NO |
| Micro. load contents | F-CMS-01305 | 0.004 | 1 | Mission | 0.004 | daily | Contents of Insturment load | FILE | PUBLIC | NO | NO |

*Table A-3. Command Management Sizing Requirements (3 of 3)*

| File or Table | Rqmt ID | File Size | Units | Duration | Total (MB) | SDPS Export Freq. | Description | Sybase or File | Public or Private | Cfg Ctrl | IST Init File |
|---|---|---|---|---|---|---|---|---|---|---|---|
| Table Map (Buffer Image) | F-CMS-01220 | 4.3 | 1 | Mission | 4.3 | daily | Map of S/C Table | FILE | PUBLIC | NO | NO |
| Table Load Contents | F-CMS-01010 | 0.05 | 95 | Mission | 4.75 | daily | Current contents of S/C table | FILE | PUBLIC | NO | NO |
| Table Load Report | F-CMS-01150 | 12.8 | 95 | Mission | 1216 | daily | Report of table load | FILE | PUBLIC | NO | NO |
| Table Load Catalog Report | F-CMS-01215 | 0.5 | 1 | Mission | 0.5 | daily | Report of load catalog | FILE | PUBLIC | NO | NO |
| Table Load Map Report | F-CMS-01225 | 12.8 | 1 | Mission | 12.8 | daily | Report of table load map | FILE | PUBLIC | NO | NO |
| | | | | | | | | | | | |
| | | | | | | | | | | | |
| **TOTAL** | | | | | **1442.7** | | | | | | |
| | | | | | | | | | | | |

*Table A-4. Command Sizing Requirements*

| File or Table | Rqmt Id | File Size | Units | Duration | Total (MB) | SDPS Export Freq. | Description | Sybase or File | Public or Private | Cfg Ctrl | IST Init File |
|---|---|---|---|---|---|---|---|---|---|---|---|
| Command Events | | | | | | | Events are sized in Datamgmt | | | | No |
| Config Snapshots | F-FOS-00070 | 0.5 | 3 | temp | 1 | never | Temp file used during failover | FILE | PUBLIC | NO | NO |
| Command Archive | F-CMD-04115 | 1.5 | 1 | 7 days | 1.5 | daily | Commands archived in EDOS format | FILE | PUBLIC | NO | NO |
| | | | | | | | | | | | |
| **TOTAL** | | | | | **2.5** | | | | | | |
| | | | | | | | | | | | |

*Table A-5. Telemetry Sizing Requirements*

| File or Table | Rqmt ID | File Size | Units | Duration | Total (MB) | SDPS Export Freq. | Description | Sybase or File | Public or Private | Cfg Ctrl | IST Init File |
|---|---|---|---|---|---|---|---|---|---|---|---|
| Merged h/k tlm | F-TLM-01510 | 8.64 | 216 | 9 days (2 days stagging) | 1866.24 | 12 units every half day | 32k realtime, 16k back orbit (2 realtime streams 16k x 2) | FILE | PUBLIC | NO | NO |
| SCC memory dump | F-TLM-01710 | 1.44 | 7 | 1 week | 10.08 | daily | 1 10 minute dump per day | FILE | PUBLIC | NO | NO |
| FDF subsets | F-TLM-01810 | 0.87 | 168 | 1 week | 146.16 | daily | attitude sensor, nav tlm, s/c maneuver | FILE | PUBLIC | NO | NO |
| Instr. memory dump | F-TLM-01710 | 1.44 | 7 | 1 week | 10.08 | daily | 1 10 min dump per day | FILE | PUBLIC | NO | NO |
| Expected Params Table | F-TLM-02110 | 0.2 | 168 | 1 week | 33.6 | daily | new table every hour | FILE | PUBLIC | NO | NO |
| Spacecraft State Report | F-TLM-02130 | 0.1 | 168 | 1 week | 16.8 | daily | new report every hour | FILE | PUBLIC | NO | NO |
| | | | | | | | | | | | |
| | | | | | | | | | | | |
| **TOTAL** | | | | | **2083** | | | | | | |
| | | | | | | | | | | | |

*Table A-6. Analysis Sizing Requirements (1 of 2)*

| File or Table | Rqmt Id | File Size | Units | Duration | Total (MB) | SDPS Export Freq. | Description | Sybase or File | Public or Private | Cfg Ctrl | IST Init File |
|---|---|---|---|---|---|---|---|---|---|---|---|
| Star Density Profile | F-ANA-04030 | 10 | 1 | Mission | 10 | N/A | FDF supplied | SYBASE | PUBLIC | YES | NO |
| Start Interference | F-ANA-04030 | 2 | 1 | Mission | 2 | N/A | FDF supplied | SYBASE | PUBLIC | YES | NO |
| ESA Sun/Moon I/F | F-ANA-04030 | 1 | 1 | Mission | 1 | N/A | FDF supplied | SYBASE | PUBLIC | YES | NO |
| FSS Visibility Prediction | F-ANA-04030 | 1 | 1 | Mission | 1 | N/A | FDF supplied | SYBASE | PUBLIC | YES | NO |
| TDRSS State Vectors | F-ANA-04030 | 10 | 1 | Mission | 10 | N/A | FDF supplied | SYBASE | PUBLIC | YES | NO |
| TDRSS Avail Times | F-ANA-04030 | 1 | 1 | Mission | 1 | N/A | FDF supplied | SYBASE | PUBLIC | YES | NO |
| Oscillator Freq Report | F-ANA-04030 | 1 | 7 | Mission | 7 | N/A | FDF supplied | SYBASE | PUBLIC | YES | NO |
| Filter Tuning Params | F-ANA-04030 | 1 | 1 | Mission | 1 | N/A | FDF supplied | SYBASE | PUBLIC | YES | NO |
| Omni-TDRSS view times | F-ANA-04030 | 2 | 1 | Mission | 2 | N/A | FDF supplied | SYBASE | PUBLIC | YES | NO |
| HGA-TDRSS view times | F-ANA-04030 | 10 | 1 | Mission | 10 | N/A | FDF supplied | SYBASE | PUBLIC | YES | NO |
| Omni-GS view times | F-ANA-04030 | 1 | 1 | Mission | 1 | N/A | FDF supplied | SYBASE | PUBLIC | YES | NO |
| HGA Gimbal Angles | F-ANA-04030 | 2 | 1 | Mission | 2 | N/A | FDF supplied | SYBASE | PUBLIC | YES | NO |
| Predicted Ephemeris | F-ANA-04030 | 10 | 1 | Mission | 10 | N/A | FDF supplied | SYBASE | PUBLIC | YES | NO |

*Table A-6. Analysis Sizing Requirements (2 of 2)*

| File or Table | Rqmt Id | File Size | Units | Duration | Total (MB) | SDPS Export Freq. | Description | Sybase or File | Public or Private | Cfg Ctrl | IST Init File |
|---|---|---|---|---|---|---|---|---|---|---|---|
| Mass Location Estimate | F-ANA-04030 | 1 | 1 | Mission | 1 | N/A | FDF supplied | SYBASE | PUBLIC | YES | NO |
| User Supplied Algorithm | F-ANA-04060 | 0.1 | 120 | Mission | 12 | monthly | Algorithms supplied by users | SYBASE | PUBLIC | YES | NO |
| MMM Statistics Data | F-ANA-04310 | 2 | 7 | 7 days | 14 | daily | min,max,mean stats | FILE | PUBLIC | NO | NO |
| ASCII Reports | F-ANA-04310 | 1 | 2000 | 7 days | 2000 | N/A | analysis reports | FILE | PUBLIC | NO | NO |
| Downlink Order Report | F-ANA-04350 | 1 | 2000 | 7 days | 2000 | N/A | report of mnemonics in downlink | FILE | PUBLIC | NO | NO |
| Param Out of Limits Rep | F-ANA-04400 | 0.1 | 7 | 7 days | 0.7 | daily | limit violation report | FILE | PUBLIC | NO | NO |
| Orbit Statistics | F-ANA-05030 | 6 | 90 | 1 month | 540 | daily | 48 bytes/mnemonic * 3000 per orbit | FILE | PUBLIC | NO | NO |
| Daily Statistics | F-ANA-05040 | 4 | 12 | 1 year | 48 | Monthly | " per day | FILE | PUBLIC | NO | NO |
| Monthly Statistics | F-ANA-05060 | 4 | 12 | Mission | 48 | Never | " per month | FILE | PUBLIC | NO | NO |
| EOS Elements | F-ANA-05160 | 1 | 1 | Mission | 1 | daily | generated from FDF data | FILE | PUBLIC | NO | NO |
| Osc. Freq. Report | F-ANA-05160 | 1 | 7 | 7 days | 7 | daily | generated from FDF data | FILE | PUBLIC | NO | NO |
| Mass Locations Est | F-ANA-05160 | 1 | 1 | Mission | 1 | daily | generated from FDF data | FILE | PUBLIC | NO | NO |
| FDF Statistics | F-ANA-05180 | 10 | 1 | 7 days | 10 | daily | generated from FDF data | FILE | PUBLIC | NO | NO |
| | | | | | | | | | | | |
| **TOTAL** | | | | | **4740.7** | | | | | | |
| | | | | | | | | | | | |

*Table A-7. Data Management Sizing Requirements*

| File or Table | Requirement id | Size | Units | Duration | Total (MB) | SDPS Export Freq. | Description | Sybase or File | Public or Private | Cfg Ctrl | IST Init File |
|---|---|---|---|---|---|---|---|---|---|---|---|
| Telemetry PDB | F-DMS-00120 | 5 | 10 | Mission | 50 | every rel. | 2 Versions | SYBASE | PUBLIC | YES | NO |
| Command PDB | F-DMS-00140 | 5 | 10 | Mission | 50 | every rel. | 2 Versions | SYBASE | PUBLIC | YES | NO |
| Activity PDB | F-DMS-00160 | 5 | 10 | Mission | 50 | every rel. | 2 Versions | SYBASE | PUBLIC | YES | NO |
| Constraint PDB | F-DMS-00180 | 5 | 10 | Mission | 50 | every rel. | 2 Versions | SYBASE | PUBLIC | YES | NO |
| Telemetry ODB | F-DMS-00610 | 5 | 10 | Mission | 50 | every rel. | All versions thru out life of mission | FILE | PUBLIC | YES | YES |
| Command ODB | F-DMS-00620 | 5 | 10 | Mission | 50 | every rel. | 2 Versions | FILE | PUBLIC | YES | YES |
| Activity ODB | F-DMS-00630 | 5 | 10 | Mission | 50 | every rel. | 2 Versions | FILE | PUBLIC | YES | YES |
| Constraint ODB | F-DMS-00640 | 5 | 10 | Mission | 50 | every rel. | 2 Versions | FILE | PUBLIC | YES | YES |
| PDB Log | F-DMS-00270 | 10 | 1 | Mission | 10 | daily | log of changes | FILE | PUBLIC | YES | NO |
| PDB Report | F-DMS-00410 | 5 | 40 | Mission | 200 | daily | acounting info, param reports, etc | FILE | PUBLIC | YES | NO |
| Events Archive | F-DMS-00910 | 0.1 | 168 | 7 days | 16.8 | daily | 7 days of events | FILE | PUBLIC | YES | NO |
| Spacecraft Definitions | F-DMS-00110 | 10 | 25 | Mission | 250 | every rel. | DB received from SC team | FILE | PUBLIC | YES | NO |
| Instrument Definitions | F-DMS-00110 | 10 | 25 | Mission | 250 | every rel. | DB received from instr. team | FILE | PUBLIC | YES | NO |
| History Log | F-DMS-01010 | | | | | | See source of data | | | | |
| Long term stagging | F-DMS-01140 | 5 | 200 | Mission | 1000 | N/A | stagging for long term data files | FILE | PUBLIC | YES | NO |
| | | | | | | | | | | | |
| | | | | | | | | | | | |
| **TOTAL** | | | | | **2126.8** | | | | | | |
| | | | | | | | | | | | |

*Table A-8. Resource Management Sizing Requirements*

| File or Table | Rqmt Id | Size | Units | Duration | Total (MB) | SDPS Export Freq. | Description | Sybase or File | Public or Private | Cfg Ctrl | IST Init File |
|---|---|---|---|---|---|---|---|---|---|---|---|
| EDOS CUst. Op.Data Acctg. | F-TLM-02215 | 0.1 | 168 | Week | 16.8 | daily | 1 report every 5 secs during SC contact | FILE | PUBLIC | NO | NO |
| EDOS TSS Summary Report | F-TLM-02210 | 0.1 | 168 | Week | 16.8 | daily | 1 report per SC contact | FILE | PUBLIC | NO | NO |
| RTS Default Config File | F-RMS-00020 | 1 | 1 | Week | 1 | daily | 1 per RTS | FILE | PUBLIC | NO | NO |
| NASCOM Blocks | F-RMS-04010 | 1 | 168 | Week | 168 | daily | 1 message every 5 secs during SC contact | FILE | PUBLIC | NO | NO |
| EDOS ConfigSnapshot | | 0.1 | 1 | Week | 0.1 | never | RTS scratch data | FILE | PUBLIC | NO | NO |
| NCC ConfigSnapshot | | 0.1 | 1 | Week | 0.1 | never | RTS scratch data | FILE | PUBLIC | NO | NO |
| | | | | | | | | | | | |
| | | | | | | | | | | | |
| **TOTAL** | | | | | **202.8** | | | | | | |
| | | | | | | | | | | | |

*Table A-9. User Interface Sizing Requirements*

| File or Table | Rqmt ID | File Size | Units | Duration | Total (MB) | SDPS Export Freq. | Description | Sybase or File | Public or Private | Cfg Ctrl | IST Init File |
|---|---|---|---|---|---|---|---|---|---|---|---|
| U/I language procedures | F-FUI-02800 | 0.01 | 300 | Mission | 3 | N/A | procedure files | FILE | PUBLIC | YES | YES |
| Request files | F-FUI-09100 | 0.01 | 200 | Mission | 2 | N/A | analysis request files | FILE | PUBLIC | NO | NO |
| EMAIL | F-FUI-02500 | 0.1 | 100 | Mission | 10 | N/A | messages, data files | FILE | PRIVATE | NO | NO |
| Operator requests | F-FUI-09100 | 0.01 | 1000 | 7 days | 10 | N/A | requests,directives,executed procs | FILE | PUBLIC | YES | NO |
| Room Definitions | F-FUI-01100 | 0.01 | 200 | Mission | 2 | N/A | displayt formats | FILE | PUBLIC | YES | YES |
| Technical Doc | F-FUI-02400 | 1 | 100 | Mission | 100 | N/A | spacecraft and instrument doc | FILE | PUBLIC | YES | YES |
| On-line Help Doc | F-FUI-02700 | 1 | 10 | Mission | 10 | N/A | system, software, network help | FILE | PUBLIC | YES | YES |
| Report Template | F-FUI-02920 | 0.1 | 100 | Mission | 10 | N/A | report format templates | FILE | PUBLIC | YES | YES |
| Reports | F-FUI-02925 | 0.5 | 150 | month | 75 | N/A | power, memory, anomaly, etc | FILE | PUBLIC | NO | NO |
| Screen Snaps | F-FUI-02940 | 1 | 40 | 7 days | 40 | N/A | snaps of displays | FILE | PRIVATE | NO | NO |
| Analysis Results | F-FUI-09200 | 1 | 2000 | 7 days | 2000 | N/A | analysis results for a week | FILE | PRIVATE | NO | NO |
| Standing Order | F-FUI-09300 | 0.01 | 50 | 7 days | 0.5 | N/A | canned analysis requests | FILE | PUBLIC | NO | YES |
| Event History File | F-FUI-09700 | 0.2 | 25 | 7 days | 5 | N/A | generated from event request | FILE | PRIVATE | NO | NO |
| Display Definitions | F-FUI-02630 | 0.05 | 500 | Mission | 25 | N/A | display defintion files | FILE | PUBLIC | YES | YES |
| | | | | | | | | | | | |
| **TOTAL** | | | | | **2292.5** | | | | | | |
| | | | | | | | | | | | |

***Table A-10. Total Sizing Requirements***

| Subsystem | | Total (MB) |
|---|---|---|
| Application | | 1195 |
| Telemetry | | 2082.96 |
| Commanding | | 2.5 |
| Planning & Scheduling | | 1023.5 |
| User Interface | | 2292.5 |
| Analysis | | 4740.7 |
| Datamgmt | | 2126.8 |
| Cmnd mgmt | | 1442.682 |
| Resource mgmt | | 202.8 |
| | | |
| **Total (Pre-scratch)** | | **15109.4** |
| **Scratch 10%** | **0.1** | **1510.94** |
| | | |
| **Total - AM1 (MB)** | | **16620.4** |
| | | |

This page intentionally left blank.

# Abbreviations and Acronyms

| | |
|---|---|
| AM | Morning (ante meridian) -- see EOS AM |
| ASTER | Advanced Spaceborne Thermal Emission and Reflection Radiometer (formerly ITIR) |
| ATC | Absolute Time Command |
| BAP | Baseline Activity Profile |
| CCB | Change Control Board |
| CCSDS | Consultative Committee for Space Data Systems |
| CERES | Clouds and Earth's Radiant Energy System |
| CFG CTRL | Configuration Control |
| CMD | Command subsystem |
| CMS | Command Management Subsystem |
| CODA | Customer Operations Data Accounting |
| COTS | Commercial Off-The-Shelf |
| CSMS | Communications and Systems Management Segment |
| CSS | Communications Subsystem (CSMS) |
| DAAC | Distributed Active Archive Center |
| DAS | Detailed Activity Schedule |
| DB | Data Base |
| DBA | Database Administrator |
| DBMS | Database Management System |
| DFCD | Data Format Control Document |
| DMS | Data Management Subsystem |
| DSN | Deep Space Network |
| Ecom | EOS Communication |
| ECS | EOSDIS Core System |
| EDOS | EOS Data and Operations System |

| | |
|---|---|
| EOC | EOS Operations Center (ECS) |
| EOS | Earth Observing System |
| EOSDIS | EOS Data and Information System |
| EU | Engineering Unit |
| FAS | FOS Analysis Subsystem |
| FDF | Flight Dynamics Facility |
| FDM | FOS Data Management Subsystem |
| FOS | Flight Operations Segment |
| FOT | Flight Operations Team |
| FRM | FOS Resource Management Subsystem |
| FSW | Flight Software |
| FTL | FOS Telemetry Subsystem |
| FUI | FOS User Interface |
| GB | Gigabytes |
| GN | Ground Network |
| GSFC | Goddard Space Flight Center |
| GUI | Graphical User Interface |
| H&S | Health and Safety |
| H/K | Housekeeking |
| HTML | HyperText Markup Language |
| I/F | Interface |
| ICC | Instrument Control Center |
| ICD | Interface Control Document |
| ID | Identifier |
| IOT | Instrument Operations Team |
| IST | Instrument Support Terminal |
| IST | Instrument Support Toolkit |
| IWG | Investigator Working Group |
| Kbps | Kilobits per second |

| | |
|---|---|
| LAN | Local Area Network |
| L/T | Long Term |
| LTIP | Long-Term Instrument Plan |
| LTSP | Long-Term Science Plan |
| MB | Megabytes |
| Mbps | Megabits per second |
| MISR | Multi-angle Imaging Spectro-Radiometer |
| MMM | Minimum, Maximum, and Mean |
| MODIS | Moderate resolution Imaging Spectrometer |
| MOPITT | Measurements Of Pollution In The Troposphere |
| MSS | Management Subsystem |
| MTPE | Mission to Planet Earth |
| NASA | National Aeronautics and Space Administration |
| Nascom | NASA Communications Network |
| NCC | Network Control Center |
| OASIS | Operations and Science Instrument Support |
| ODB | Operational Database |
| PAS | Planning and Scheduling |
| PDB | Project Data Base |
| PI | Principal Investigator |
| PI/TL | Principal Investigator/Team Leader |
| PID | Parameter Identifier |
| R/T | Real-Time |
| RAID | Redundant Array of Inexpensive Disks |
| RCM | Real-Time Contact Management |
| RDBMS | Relational Database Management System |
| RMS | Resource Management Subsystem |
| Rqmt | Requirement |
| RTCS | Relative Time Command Sequence |

| | |
|---|---|
| RTS | Relative Time Sequence |
| S/C | Spacecraft |
| SCC | Spacecraft Controls Computer |
| SDPS | Science Data Processing Segment |
| SN | Space Network |
| SQL | Structured Query Language |
| T&C | Telemetry and Command |
| TBD | To Be Determined |
| TDRS | Tracking and Data Relay Satellite |
| TDRSS | Tracking and Data Relay Satellite System |
| TLM | Telemetry subsystem |
| TSS | TDRSS Service Session |
| UI | User Interface |
| W/S | Workstation |
| WOTS | Wallops Orbital Tracking Station |