EOC Installation Status

Douglas M. Smith

25 July 1997

FOS CSR Roadmap

Overview Material

FOS Overview
- CSR Objectives
- FOS Status & Schedule

TRR Action Item Summary
- Review each TRR action item
- Present status of each

FOS System Status

EOC Installation Status
- Hardware status
- COTS status
- Open items

FOS Dry-Run Phase

Dry-Run Test Results
- Dry-Run Test Status
- Technical Issues and Liens

FOS Acceptance Test Phase

Acceptance Test Plans
- EOC test environment
- EOC test activities
- EOC test process

Audits
- PCA
- FCA

EOC Changes Since Release A

User Stations

- **Increased from 4 to 36**

Servers

- **Increased from 2 to 6**

RAIDs

- **Increased from 1 to 2**

EOC Physical Layout

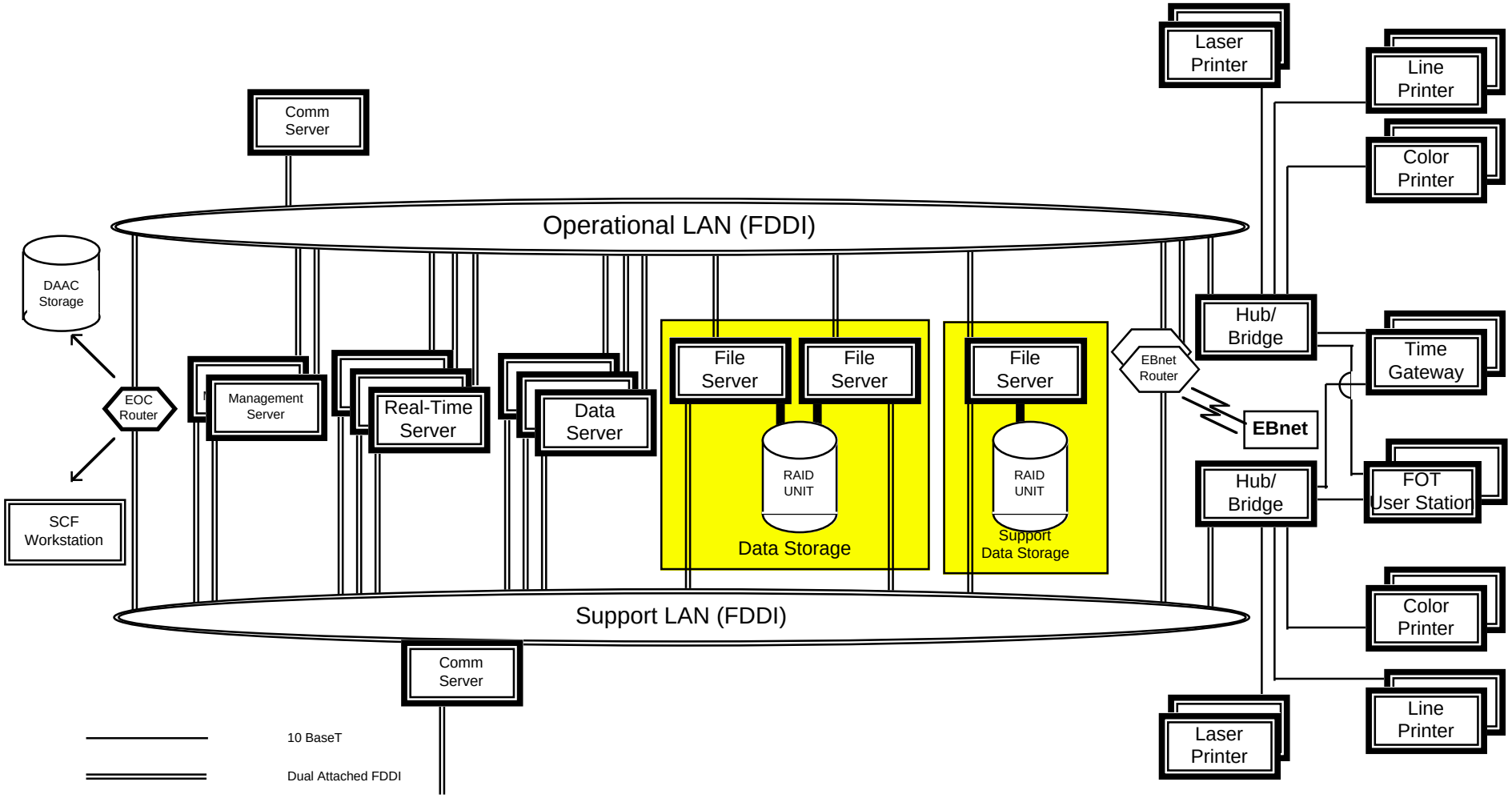

EOC Hardware/Network Diagram

See next page.

GSFC EOC - Release B HW/Network

Doc. No.: FOS-HWNET-001

Randy Haynes
ECS/SMO/ISS
7/22/97

Notes:
Operational LAN
Network Address: 198.118.199.0
Subnet Mask: 255.255.255.0
Broadcast Address: 198.118.199.255
Default Router Address: 198.118.199.3

Support LAN*
Network Address: 198.118.200.0
Subnet Mask for Hosts: 255.255.255.0
Subnet Mask for EOC Router: 255.255.255.224
Broadcast Address: 198.118.200.255
Default Router Address: 198.118.200.35

M&O Sustaining Engineering LAN**
Network Address: 198.118.200.0
Subnet Mask for Hosts: 255.255.255.0
Subnet Mask for EOC Router: 255.255.255.224
Broadcast Address: 198.118.200.255
Default Router Address: 198.118200.161

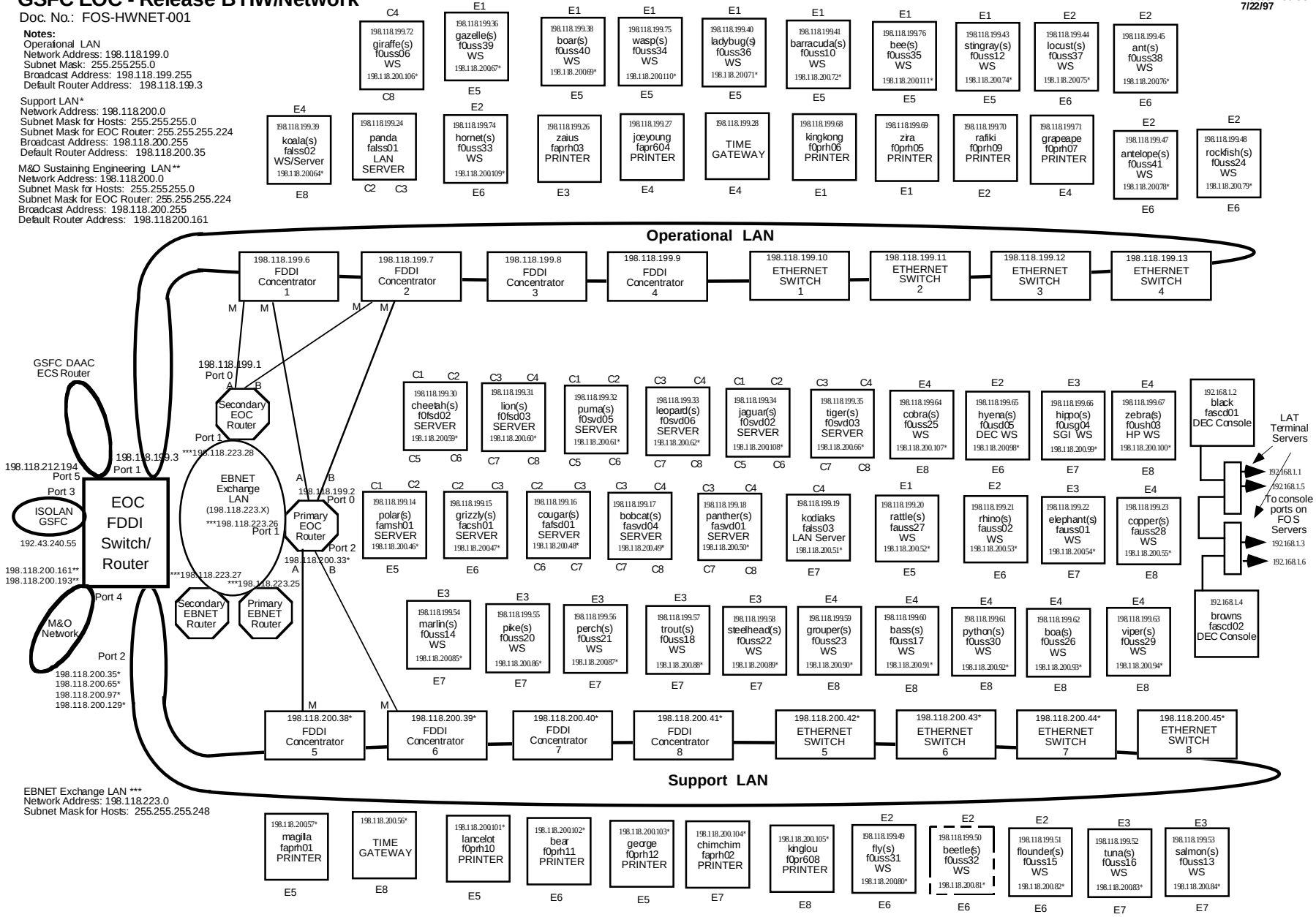

EBNET Exchange LAN ***
Network Address: 198.118.223.0
Subnet Mask for Hosts: 255.255.255.248

Key: Cx is FDDI Concentrator x; Ex is FDDI-to-Ethernet Switch x

COTS Installation Status Summary (1) of (2)

Three Real Time Servers

DEC OSF/1 v3.2
DEC Network Application Support
X/Motif
Sybase Server/Client 10.0.2
DEC C, C++ Compilers
DEC Fuse
Tivoli Client 3.0.1
TCP Wrappers

Three Data Servers

DEC OSF/1 v3.2
DEC Network Application Support
X/Motif
Sybase Server/Client 10.0.2
DEC C, C++ Compilers
DEC Fuse
Tivoli Client 3.0.1
TCP Wrappers

Two Data Storage Units

DEC OSF/1 v3.2
DEC Network Application Support
DEC Storage Works
Sybase Client 10.0.2
Netscape
IMSL
Tivoli Client 3.0.1
Crack 4.1
Satan 1.1.1
TCP Wrappers

Two Console Managers

DEC OSF/1 v3.2
DEC Network Application Support
DEC OpenDEC Open 3D
DEC Multimedia Services
DEC Console Manager Soft

35 FOT Sun User Stations

Solaris 2.5.1
X/Motif
C,C++ Compilers
SparcWorks
Tivoli Client 3.0.1
Crack 4.1
Satan 1.1.1
TCP Wrappers

COTS Installation Status Summary (2) of (2)

One FOT DEC User Station

DEC OSF/1 v3.2
DEC Network Application Support
X/Motif
DEC,C, C++ Compilers
DEC Fuse
Tivoli Client 3.0.1

One FOT HP User Station

HPUX 10.10
X/Motif
C, C++ Compilers
Softbench
Tivoli Client 3.0.1

One FOT SGI User Station

XRIX 6.2
X/Motif
C, C++ Compilers
MIPSPRO
Tivoli Client 3.0.1

Two Management Servers

HPUX 10.10
X/Motif
Tivoli Server 3.0.1
Remedy TT 2.0.2
C, C++ Compilers
Softbench

Management Workstation

Solaris 2.5.1
X/Motif
Tivoli Client 3.0.1
C,C++ Compilers
SparcWorks
XRP II v3.0
RTWorks 3.5

Two Communication Server

Solaris 2.5.1
X/Motif
Netscape Enterprise Web Server
C,C++ Compilers

EOC Checkout Status

Objective

- **Ensure that all FOS hardware, network, and peripherals work in multiple operational configurations**
- **Ensure that FOS Test activities can be performed concurrently on the operations and support LANs**

Status

- **All COTS for configured hardware have been installed, except Tivoli**
- **Concurrent operations and support LAN activities verified**
- **All servers (Real-Time and Data Servers) verified on both LANs**
- **All User Stations verified on both LANs**
- **All peripherals verified on both LANs**
- **Procedures for switching between LANs for all equipment has been verified**

Open Issues

Issue

- **Need to install 6 Sun Ultra Workstations**
  - **6 workstations being used in the mini-EOC to improve Integration efficiency**
- **Need to connect 7 workstation monitors that will be used for displaying UTC, AOS, and LOS times in each room**
- **Need to install 1 UTC clock in LSR (through physical firewall)**

Impact

- **None**

Open Issues

Plan

- **Move 6 Sun Ultra User Stations from mini-EOC by RRR**
- **Connect monitors by 8/15/97**
- **Install UTC clock by 8/15/97**

Issue

- **Security Software**
  - **Need to install TCP Wrappers**
- **Impact**
  - **Limited**

    Router filters provide security already
- **Plan**
  - **Complete installation by 8/8/97**