411-CD-005-001

EOSDIS Core System Project

ECS System Acceptance Test Procedures - Volume 5 EDC Procedures for the ECS Project

September 1996

Hughes Information Technology Systems
Upper Marlboro Maryland

ECS System Acceptance Test Procedures - Volume 5
EDC Procedures for the ECS Project

Final

September 1996

Prepared Under Contract NAS5-60000
CDRL Item #070

SUBMITTED BY

Mark Settle /s/	8/30/96
Mark Settle, Project Manager EOSDIS Core System Project	Date

Hughes Information Technology Systems
Upper Marlboro, Maryland

411-CD-005-001

This page intentionally left blank.

Preface

This document is a formal contract deliverable with an approval code 1. It requires Government review and approval prior to acceptance and use. This document is under ECS contractor configuration control. Once this document is approved, Contractor approved changes are handled in accordance with Class I and Class II change control requirements described in the EOS Configuration Management Plan, and changes to this document shall be made by document change notice (DCN) or by complete revision.

Any questions should be addressed to:

Data Management Office
The ECS Project Office
Hughes Information Technology Systems
1616 McCormick Drive
Upper Marlboro, MD 20774-5372

This page intentionally left blank.

Abstract

The ECS System Acceptance Test procedures documents contain the specific test instructions to completely verify that the TRMM ECS release (ECS Release A) installed at the GSFC, LaRC, and EDC DAACs, and the EOC and SMC sites satisfy the level 3 requirements documented in the Functional and Performance Requirements Specification (F&PRS).

There is a separate set of test procedures for each DAAC, the EOC and SMC. The test procedures are delivered as separate volumes for each site.

These test procedures were developed using the July 31st, 1996, Requirements Traceability Management (RTM) baseline (RELA_TRR_073196).

Keywords: Acceptance test, ECS Release A, level 3 requirements, EDC

This page intentionally left blank.

Change Information Page

List of Effective Pages	
Page Number	**Issue**
Title	Submitted as Final for RRR
iii through xvi	Submitted as Final for RRR
1-1 through 1-4	Submitted as Final for RRR
2-1 through 2-2	Submitted as Final for RRR
3-1 through 3-16	Submitted as Final for RRR
4-1 through 4-8	Submitted as Final for RRR
5-1 through 5-10	Submitted as Final for RRR
6-1 through 6-2	Submitted as Final for RRR
7-1 through 7-28	Submitted as Final for RRR
8-1 through 8-130	Submitted as Final for RRR
9-1 through 9-16	Submitted as Final for RRR
10-1 through 10-22	Submitted as Final for RRR
11-1 through 11-2	Submitted as Final for RRR
12-1 through 12-10	Submitted as Final for RRR
A-1 through A-2	Submitted as Final for RRR
B-1 through B-4	Submitted as Final for RRR
C-1 through C-14	Submitted as Final for RRR
D-1 through D-2	Submitted as Final for RRR
E-1 through E-4	Submitted as Final for RRR
AB-1 through AB-8	Submitted as Final for RRR
GL1 through GL2	Submitted as Final for RRR

Document History			
Document Number	**Status/Issue**	**Publication Date**	**CCR Number**
411-CD-005-001	Submitted as Final for RRR	September 1996	96-0995

This page intentionally left blank.

Contents

1. Introduction

1.1 Identification 1-1

1.2 Scope 1-2

1.3 Purpose 1-2

1.4 Status and Schedule 1-2

1.5 Organization 1-2

2. Related Documentation

2.1 Parent Documents 2-1

2.2 Applicable Documents 2-1

2.3 Information Documents 2-2

3. Acceptance Test Overview

3.1 Release A Capabilities 3-1

3.2 Release A Acceptance Test Approach 3-1

3.2.1 ECS Functional Tests 3-2

3.2.2 Interface Acceptance Tests 3-2

3.3 Acceptance Test Roles and Responsibilities 3-12

4. Test Tools

4.1 Requirements Traceability 4-2

4.2 Computer Aided Software Test and Performance Tools 4-3

4.2.1 XRunner Usage 4-3

4.2.2 LoadRunner Usage 4-4

4.2.3 Test Execution Reports 4-4

4.3 Configuration Management Tools 4-4
4.3.1 ClearCase 4-4
4.3.2 Distributed Defect Tracking System (DDTS) 4-5
4.4 Network Status and Monitoring 4-5
4.4.1 HP OpenView 4-5
4.4.2 Network Analyzer/Sniffer 4-6
4.4.3 Netperf 4-6
4.5 External Interface Simulators 4-6
4.5.1 TRMM Simulator (TRMMSIM) 4-6
4.5.2 EOSDIS Test System (ETS) 4-6
4.6 Test Data 4-6

5. Test Execution and Coordination

5.1 Acceptance Test Planning 5-1
5.2 Acceptance Test Preparation 5-1
5.2.1 Software Pre-Install 5-3
5.2.2 Release A Acceptance Test Readiness Reviews 5-3
5.2.3 Release A Consent to Ship Review 5-3
5.3 Acceptance Test Implementation 5-4
5.4 Test Execution and Error Handling 5-4
5.4.1 Non-Conformance Reporting 5-5
5.4.2 Acceptance Test Delays 5-6
5.4.3 Discrepancies At Other Sites 5-7
5.4.4 Physical Configuration Audits 5-7
5.4.5 Functional Configuration Audit 5-7
5.4.6 Release Readiness Review (RRR) 5-8
5.5 Test Logs 5-8

6. Release A Test Schedule

6.1 Test Schedule 6-1

7. Overview

7.1 EDC Release A Functions....7-1

7.1.1 DAAC-Specific Mission and Operations Activities....7-2

7.2 EDC Release A External Interfaces....7-2

7.2.1 EDC Facility and Test Environment....7-5

7.2.2 EDC Test Environment Safety Considerations....7-7

7.3 EDC Configuration....7-8

7.3.1 EDC Hardware Configuration....7-11

7.3.2 EDC DAAC LAN Configuration....7-13

7.3.3 EDC Software Configuration....7-14

7.4 Acceptance Test Preparation....7-15

7.4.1 EDC's Site Readiness to Conduct Acceptance Test....7-15

7.4.2 Required Personnel....7-16

7.5 Acceptance Test Sequences....7-17

7.5.1 EDC Test Procedure Roadmap....7-22

7.6 Test Conduct....7-23

7.6.1 Test Direction....7-23

7.6.2 Test Schedule Management....7-23

7.6.3 Test Execution....7-24

7.6.4 Unscheduled Events During Test Execution....7-25

7.6.5 Test Conduct Documentation....7-25

7.6.6 Daily Test Reviews....7-26

7.7 Acceptance Test Schedule....7-26

7.8 Release Readiness Review (RRR)....7-28

8. System Management Scenario Group

8.1 ECS Site Commission Scenario....8-1

8.1.1 M&O Procedures Review and Confidence Test Sequence....8-1

8.1.2 Site Start-up Sequence....8-5

8.1.3 Site Operations Sequence....8-12

8.1.4 Site Shutdown/Recovery Sequence....8-12

8.1.5 Site Maintenance Sequence....8-20

8.1.6 Site Data/Metadata/Information Management Sequence 8-26
8.1.7 Facilities Interfaces Sequence 8-29
8.2 Scheduling Scenario 8-36
8.3 ECS Site Upgrade Scenario 8-36
8.3.1 Enhancements Sequence 8-36
8.4 Configuration Management Scenario 8-42
8.4.1 Resource Management Sequence 8-42
8.4.2 Maintenance Management Sequence 8-48
8.4.3 Logistics Management Sequence 8-48
8.4.4 Training Management Sequence 8-52
8.4.5 Inventory Management Sequence 8-56
8.4.6 Quality Management Sequence 8-61
8.4.7 Policies and Procedures Management Sequence 8-64
8.4.8 Network Management Sequence 8-72
8.5 Performance Management Scenario 8-80
8.5.1 Metrics Sequence 8-81
8.5.2 Performance Monitoring, Analysis & Testing Sequence 8-94
8.6 Ancillary Services Scenario 8-103
8.6.1 Fault Management Sequence 8-103
8.6.2 Security Management Sequence 8-114
8.6.3 Accounting and Accountability Sequence 8-120
8.6.4 Report Generation Sequence 8-124

9. Push Scenario Group

9.1 Data Ingest, Validate, and Archive Scenario 9-1
9.1.1 Data Ingest, Process, and Archive at LaRC DAAC from SDPF Sequence 9-1
9.1.2 Data Ingest, Process, and Archive at MSFC DAAC from SDPF Sequence 9-1
9.1.3 Early AM-1 Interface Test Support Sequence 9-1
9.1.4 Early FDF and AM-1 Interface Test Support Sequence 9-7
9.2 Higher Level Processed Data Scenario 9-7
9.2.1 Higher Level Processed Data Receipt from the V0 DAAC Sequence 9-7
9.2.2≠ Higher Level Processed Data Receipt from the TSDIS to the MSFC DAAC Sequence 9-8

9.2.3≠ Higher Level Processed Data Receipt from the TSDIS to the GSFC DAAC Sequence 9-8
9.2.4 Higher Level Processed Data Receipt from the EPDS (Landsat-7) Sequence 9-8
9.2.5≠ Higher Level Processed Data Receipt from the NOAA ADC to the LaRC DAAC Sequence 9-15
9.2.6≠ Higher Level Processed Data Receipt from the NOAA ADC to the GSFC DAAC Sequence 9-15
9.3 Reprocessing Scenario 9-15
9.4 TSDIS Reprocessing Support Scenario 9-15
9.5 Mission Related Data Processing Scenario 9-16

10. Pull Scenario Group

10.1 Science User Scenario 10-1
10.1.1 ECS Desktop User Sequence 10-1
10.1.2 ECS/Version 0 (V0) System Interoperability Sequence 10-1
10.1.3≠EOSDIS Core System (ECS)/Affiliated Data Center (ADC) Interoperability Sequence 10-8
10.2 Science Computing Facility (SCF) User Scenario 10-8
10.2.1 GSFC SCF/ECS Sequence 10-9
10.2.2 LaRC SCF/ECS Sequence 10-9
10.2.3 EDC SCF/ECS Sequence 10-9

11. Flight Operations Scenario Group

12. End-to-End Scenario Group

12.1 Multi-Site Intercommunications and Interoperations Scenario 12-1
12.1.1 Inter-Site Message Sequence 12-2
12.1.2 Multi-Site System Management Sequence 12-7
12.2 TRMM Mission Support Scenario 12-7
12.2.1 SDPF Data Handling and Processing Sequence 12-7
12.2.2 TSDIS Data Handling Sequence 12-7
12.2.3 TRMM Data Product Distribution 12-7
12.2.4 Data Accounting Sequence 12-7

12.3 AM-1 End-to-End Scenario 12-8
12.4 Science Data Access and Interoperability Scenario 12-8
12.4.4 ECS Data Set Interoperability Sequence 12-8
12.5 System Performance Scenario 12-9
12.5.1 Data Ingest, Data Server and Data Distribution Performance Sequence 12-9
12.5.2 System Response Time Performance Sequence 12-9
12.5.3 ECS Sizing, Evolution, and Growth Sequence12- 12-10
12.5.4 ECS Testability and Overall Capabilities Sequence 12-10

Figures

1-1. ECS System Acceptance Test Procedure Volumes 1-1
3-1 ECS Release A Interfaces with the EOS Ground System 3-3
3-2. Release A Key Interfaces Between GSFC and LaRC 3-11
3-3. Release A Landsat-7 and AM-1 Key Interfaces 3-12
4-1. Release A Test Tool Integration 4-2
4-2. RTM Classes 4-2
5-1. Release A Acceptance Test Life Cycle 5-2
5-2. Acceptance Test NCR Process 5-5
5-3. NRCA System Sample Reports 5-6
5-4. Test Log Summary 5-9
6-1 Release A Detail Test Activity Schedule 6-2
7-1. EDC ECS DAAC External Interfaces 7-3
7-2 EDC Floor Plan 7-6
7-3. SDPS Subsystems and Components 7-9
7-4. CSMS Subsystems and Components 7-10
7-5. EDC DAAC Hardware Configuration Overview Diagram 7-13
7-6 EDC DAAC LAN Topology 7-14
7-7. Acceptance Test Schedule 7-27
7-8. Release Readiness Review Material 7-28

Tables

3-1. ECS Ir1 to Release A Enhancements 3-1
3-2. ECS Release A Data Flow Interfaces 3-4
4-1. Release A Test Tool Descriptions 4-1
4.2 RTM Class Definitions 4-3
4-3. Release A Data Sources, Destination, and Data Content 4-7
5-1. Discrepancy Classification and Priority 5-7
7-1. EDC External Interfaces 2 7-4
7-2. EDC Release A System Configuration (To Be Determined) 7-10
7-3. Planned Sequence of Test Activities 7-18
8-1. RMA Capabilities 8-88

Appendix A. Test Sequences Mapped to External Interfaces

Appendix B. Test Sequences Mapped to Operations Scenarios

Appendix C. Test Procedures Mapped to M&O Operations Manual

Appendix D. Test Sequences Mapped to GSFC Hardware

Appendix E. Test Procedure Format

Abbreviations and Acronyms

Glossary

This page intentionally left blank.

1. Introduction

1.1 Identification

The Acceptance Test Procedures (ATPr), Contract Data Requirement List (CDRL) item 070, whose requirements are specified in Data Item Description (DID) 411/VE1, is a required deliverable under the Earth Observing System Data and Information System (EOSDIS) Core System (ECS) Contract NAS5-60000.

The Release A ECS System Acceptance Test Procedures describe the approach the Independent Acceptance Test Organization (IATO) takes to verify level 3 ECS requirements. The Release A ECS System Acceptance Test Procedures - Volumes 1-5 contain the step by step test procedures for each Release A site. Figure 1-1 graphically depicts the Release A ECS System Acceptance Test Procedures volumes.

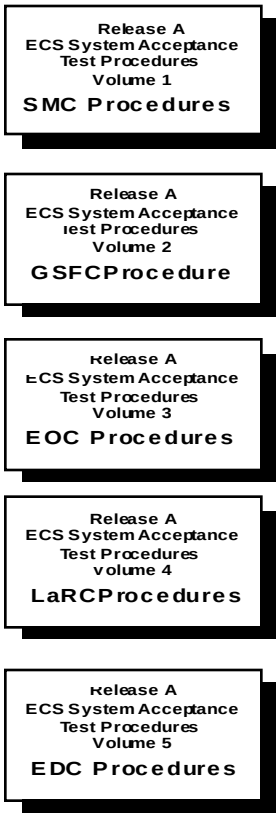

Figure 1-1. ECS System Acceptance Test Procedure Volumes

1.2 Scope

Release A of ECS supports the early operational stages of the Tropical Rainfall Measuring Mission (TRMM). Release A follows an earlier ECS delivery, referred to as Interim Release 1 (Ir1), which provided certain enterprise infrastructure in preparation for subsequent deliveries. Ir1 also provided science software integration and testing capabilities. The infrastructure delivery of ECS involves three Distributed Active Archive Centers (DAACs)-- these being the Goddard Space Flight Center (GSFC), the Langley Research Center (LaRC) and the EROS Data Center (EDC). Even though only two of the DAACs (GSFC and LaRC) directly support the TRMM effort, all three are updated at Release A. This simplifies configuration management and allows for interface testing for future ECS releases. For Release A, the Ir1 configurations of GSFC and LaRC DAACs are upgraded with major hardware and software deliveries. The EDC, which is not part of TRMM operations, receives a minor upgrade for Release A to support interface testing. Additionally, Release A provides for overall ECS system monitoring at the System Monitoring and Coordination Center (SMC) and core flight operations functionality at the EOS Operation Center (EOC) for EOS spacecraft.

This document comprises the IATO's test procedures for Release A. It contains the step-by-step procedures for implementing each formal acceptance test, including the detailed procedures for data reduction and analysis of the test results.

1.3 Purpose

The purpose of the Release A ECS System Acceptance Test Procedures is to define the procedures used to formally verify that the ECS Release A meets all specified level 3, operational, functional, performance and interface requirements. These procedures define the specific objectives, event sequences, support requirements, configuration identification, and testing procedures for each acceptance test or series of test to be performed during acceptance testing of the ECS.

1.4 Status and Schedule

The submittal of DID 411/VE1 meets the milestone specified in the Contract Data Requirements List (CDRL) for ECS Overall System Acceptance Test Procedures of NASA contract NAS5-60000. The submittal schedule is three months prior to the ECS Release A Release Readiness Review (RRR).

1.5 Organization

This document is organized in five volumes. The Release A ECS System Acceptance Test Procedures - Volumes 1 through 5 contains the step-by-step test procedures at each site.

The Release A ECS System Acceptance Test Procedures - Volumes 1-5 where-in the detailed procedures for each individual site are detailed. Sections 7-12 of Volumes 1-5 map directly to the material introduced in corresponding sections of the Release A ATPr's listed below.

Section 1: Introduction- Provides information regarding the identification, scope, purpose, status and schedule, and organization of this document.

Section 2: Related Documents: Provides a listing of parent documents, applicable documents, and documents which are used as source information.

Section 3: Acceptance Test Overview- Describes Release A capabilities and provides an overview of the acceptance functional and interface tests. Acceptance test roles and responsibilities are also described.

Section 4: Test Tools- Describes the test tools used by IATO to conduct ECS Release A System Acceptance Tests.

Section 5: Test Execution and Coordination-Discusses the process by which formal acceptance testing is managed on a daily basis.

Section 6: Release A Test Schedule- Depicts the overall ECS acceptance test schedule and coordination activities.

Sections 1-6 of Volumes 1-5 describes the approach that the IATO takes to Test ECS.

Section 7: Test Site Environment- Provides an overview of the individual site test environment.

Section 8: System Management Scenario Group- Contains the detailed procedures for the system management group of requirements.

Section 9: Push Scenario Group- Contains the detailed procedures for the push scenario group of requirements.

Section 10: Pull Scenario Group- Contains the detailed procedures for the pull scenario group of requirements.

Section 11: Flight Operations Scenario Group- Contains the detailed procedures for the Flight Operations scenario group of requirements.

Section 12: End-to-End Scenario Group- Contains the detailed procedures for the end-to-end scenario group of requirements.

This page intentionally left blank.

2. Related Documentation

2.1 Parent Documents

The parent documents are the documents from which the scope and content of this document are derived.

194-401-VE1-002	Verification Plan for the ECS Project, Final
409-CD-001-004	ECS Overall System Acceptance Test Plan for Release A
420-05-03	Earth Observing System (EOS) Performance Assurance Requirements for EOSDIS Core System (ECS)
423-41-01	Goddard Space Flight Center, EOSDIS Core System (ECS) Statement of Work
423-41-02	Goddard Space Flight Center, Functional and Performance Requirements Specification for the Earth Observing System Data and Information System (EOSDIS) Core System (ECS)

2.2 Applicable Documents

The following documents are referenced within this Specification, or are directly applicable, or contain policies or other directive matters that are binding upon the content of this document.

107-CD-002-XXX	Level 1 Master Schedule for the ECS Project
505-41-11	Goddard Space Flight Center, Interface Requirements Document Between EOSDIS Core System (ECS) and the Version 0 System, 10/95
505-41-12	Goddard Space Flight Center, Interface Requirements Document Between EOSDIS Core System (ECS) and Science Computing Facilities, 5/95
505-41-14	Goddard Space Flight Center, Interface Requirements Document Between EOSDIS Core System (ECS) and Tropical Rainfall Measuring Mission (TRMM) Ground System, 2/95
505-41-15	Goddard Space Flight Center, Interface Requirements Document Between EOSDIS the AM project for AM-1 Flight Operations, 7/95
505-41-17	Goddard Space Flight Center, Interface Requirements Document Between EOSDIS Core System (ECS) and the NASA Science Internet (NSI), 10/95

505-41-18	Goddard Space Flight Center, Interface Requirements Document Between EOSDIS and MITI ASTER GDS Project, 7/95
505-41-19	Goddard Space Flight Center, Interface Requirements Document Between the EOSDIS Core System (ECS) and the National Oceanic and Atmospheric Administration (NOAA) Affiliated Data Center (ADC), 5/95
505-41-21	Goddard Space Flight Center, Interface Requirements Document Between EOSDIS Core System (ECS) and NASA Institutional Support Systems (NISS), 5/95
505-41-32	Goddard Space Flight Center, Interface Requirements Document Between Earth Observing System Data and Information System, and the Landsat 7 System, 7/95
560-EDOS-0211.0001	Interface Requirements Document (IRD) Between the Earth Observing System (EOS) Data and Operations System (EDOS), and the EOS Ground System (EGS) Elements

2.3 Information Documents

The following documents, although not referenced herein and/or not directly applicable, do amplify or clarify the information presented in this document, but are not binding on the content of this ECS System Acceptance Test Procedures.

222-TP-003-008	Release Plan Content Description for the ECS Project

3. Acceptance Test Overview

The Earth Observing System (EOS) Data Information System (EOSDIS) Core System (ECS) capabilities are developed in terms of four formal releases. The first of the four formal releases include capabilities necessary to fully support the scheduled launch and ongoing operations for Tropical Rainfall Measurement Mission (TRMM), interface testing for Landsat-7, and command and control interface testing for AM-1. This first release, called Release A, supports data operations that follow at the EOS Operations Center (EOC), System Management Center (SMC) and three Distributed Active Archive Centers (DAACs). The DAACs that are activated for Release A are located at Goddard Space Flight Center (GSFC), Langley Research Center (LaRC), and the EROS Data Center (EDC).

3.1 Release A Capabilities

Release A of ECS supports the early operational stages of the Tropical Rainfall Measuring Mission (TRMM). Release A follows an earlier ECS delivery, referred to as Interim Release 1 (Ir1), which provided certain enterprise infrastructure in preparation for down stream deliveries. Ir1 also provided science software integration and testing capabilities. For Release A, the Ir1 configurations of GSFC, and LaRC are updated with major hardware and software deliveries while EDC, which is not part of TRMM operations, receives a minor update to support interface testing. Release A provides initial capabilities at the EOC and SMC, which include support to early interface testing and core FOS functionality. Table 3-1 summarizes the Ir1 capabilities and Release A enhancements.

Table 3-1. ECS Ir1 to Release A Enhancements

SITE	Release Ir1 Capabilities	New Release A Capabilities Deployed at Each Site
SMC	System Performance Monitoring	System Performance Monitoring and Analysis; WAN Management; and System Coordination
GSFC	TRMM Mission Support; VIRS Data Ingest, Ingest, Ancillary Data	TRMM Mission Support; VIRS Data Ingest, Archive & Distribution ; Ingest Ancillary Data; AM-1 Interface Testing; AM-1 MODIS Science Software I&T; VO Data Migration & Interoperability; TOMS Ozone Data Ingest and Archive; and System Resource Management
LaRC	TRMM Mission Support; TRMM CERES Data Ingest; NOAA Ancillary Data Ingest	TRMM Mission Support; TRMM CERES Data Ingest, Production, Archive & Distribution; Data Migration & Interoperability; AM-1 Interface Testing; NOAA Ancillary Data Ingest; TRMM & AM-1 CERES, and MISR and MOPITT Science Software I&T; SAGE Aerosol & Ozone Data, and ISCCP Data Ingest and Archive; and System Resource Management
EDC	Landsat-7 Interface Testing; Landsat-7 Level-OR Data Ingest	Landsat-7 Interface Testing; Landsat-7 Level-0R Data Ingest; ASTER/MODIS Science Software I&T; Ingest and Storage of Landsat-7 L0R data; and System Resource Management
EOC		AM-1 Interface Testing; ASTER GDS, SCF, NCC, EDOS, and FDF Interface Testing; core FOS functionality, and System Resource Management

3.2 Release A Acceptance Test Approach

The acceptance testing of Release A capabilities is divided into five major scenario groups: System Management, Push, Pull, Flight Operations, and End-to-End. These scenario groups identify high

level ECS functionality from a users and operations viewpoint. Each group is sub-divided into scenarios that emulate the operations and user environment. Scenarios are further broken down into more manageable test sequences in which test procedures that trace to level 3 requirements are executed. The Requirements and Traceability Management (RTM) Tool is used for the purpose of tracking level 3 requirements' test status.

3.2.1 ECS Functional Tests

The complete set of ECS functions allocated to Release A are verified to ensure that the release meets those requirements needed to support TRMM and provide core functionality for the AM-1 missions. This includes verifying requirements for all features needed to support the ECS Release objectives for spacecraft operations and control, scheduling, data operations, information management and archive, science processing, networks, and system management.

Acceptance testing include the verification of certain ECS features needed to support TRMM. These features are: the ingest, archive processing, and distribution of Level-1 through Level-3 of Precipitation Radar (PR), TRMM Microwave Imager (TMI), and Visible Infrared Scanner (VIRS) instrument data; and TRMM Ground Validation (GV) data transmitted from the TSDIS, which is a production system provided by the TRMM project. Additional features include the ingest, archive, product generation, and distribution of TRMM CERES and LIS instrument data received from
the SDPF.

3.2.2 Interface Acceptance Tests

Acceptance testing verifies system compliance to level 3 requirements by focusing on the objectives and capabilities specified for Release A. These capabilities are tested for functionality and performance within the boundaries of the interfaces defined for the release. The external boundary of ECS is typically at communications, data medium or graphic interfaces. For communications, these interfaces act as conduits through which input (Level-0) and output data (Level-1, Level-2, etc.), and stimuli (commands, requests, etc.) and responses (acknowledgments, data, etc.) flow. The communications interfaces to be verified for Release A include National Aeronautics and Space Administration (NASA) Science Internet (NSI), NASA Communications (NASCOM) Operational Local Area Network (NOLAN), and EOSDIS Backbone network (EBnet) where they terminate at the applicable ECS sites. At the ECS, these interfaces are physically located at the SMC and EOC; and the ECS GSFC, LaRC and EDC DAAC sites. The communications networks that are connected to the ECS terminate at two classes of external systems: data providers (whose science data are later referred to as push data) and data users (whose requests result in what later are referred to as pull data). The data providers for Release A are the Sensor Data Processing Facility (SDPF), ECS Data and Operation System (EDOS), Flight Dynamics Facility (FDF), Network Communications Center (NCC), the Landsat Processing System (LPS), and the TRMM Science Data and Information System (TSDIS). The data users for TRMM are the science user community at the DAACs and the SCFs. The node chart in Figure 3-1 depicts the interconnection of external systems with ECS. A summary of the content and carriers associated with the data flowing across ECS interfaces is shown in Table 3-2. A more complete account of each interface may be found in Interface Control Documents 209/SE1-001 through 020.

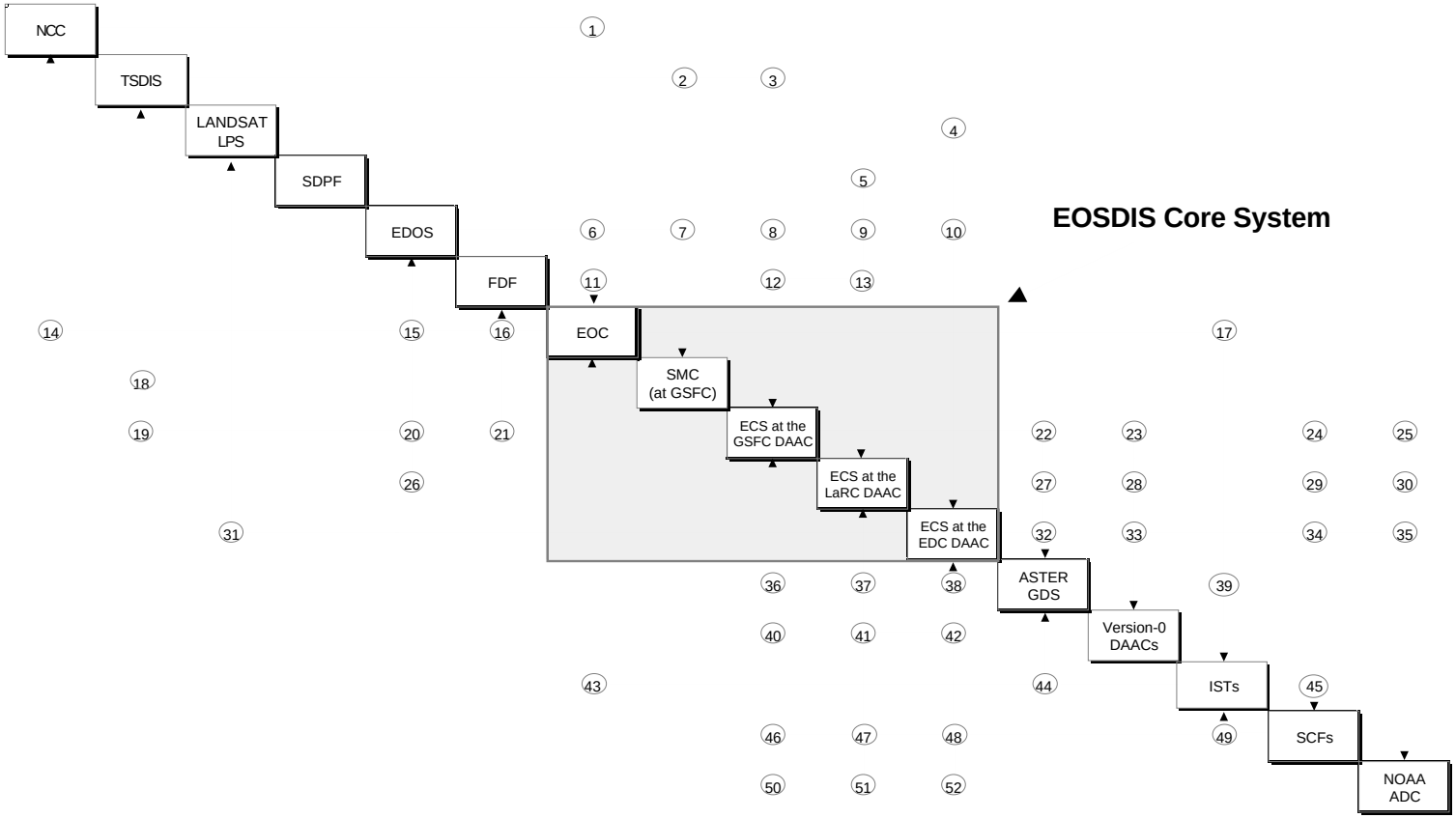

Figure 3-1. ECS Release A Interfaces with the EOS Ground System

Table 3-2. ECS Release A Data Flow Interfaces (1 of 7)

Node	Mission	Source	Destin-ation	Carrier/ Media	Data Content	Source	Date
1	AM-1	NCC	EOC	EBnet	GCM status and disposition messages.	305-CD-040-001 530-ICD-NCCDS/ MOC, Annex 4 329-CD-001-003	Oct-95 Sep-95 Oct-95
2	TRMM	TSDIS	SMC at GSFC	Email/ Phone	Schedule Coordination & Adjudication for Data Exchange with DAACs; and Status Information.	209-CD-007-001 Section 4	Jan-95
3	TRMM	TSDIS	ECS at the GSFC DAAC	Exchange LAN	Levels 1A to 3 TMI, PR, GV, VIRS and Combined Data Products, Browse Products, and Metadata; Updated Metadata; TMI, PR, GV, VIRS, Combined Algorithms and Documentation; Reprocessing Product Schedules, and Delayed Product Status; Request for Ancillary Data.	209-CD-007-004 Figure 5-1	May-96
4	Landsat-7	Landsat LPS	ECS at the EDC DAAC	Landsat Network	Data Availability Notice; Level 0R Data; Level 0R Inventory Metadata; Level 0R Browse.	209-CD-013-003 Table 3-1	Mar-96
5	TRMM	SDPF	ECS at the LaRC DAAC	EBnet	Quicklook Data Product; Level-0 Data Products; Ephemeris Data File.	510-203.103 Table 10-3	Apr-96
6	AM-1	EDOS	EOC	EBnet	Spacecraft and instrument real time housekeeping and health and safety telemetry; Real-time and rate-buffered.	510-ICD-EDOS Table 4.2.2-1 307-CD-001-003 329-CD-001-003	Jan-96 Oct-95 Oct-95
7	AM-1	EDOS	SMC at GSFC	EBnet	Summary Performance Report.	510-ICD-EDOS/EGS	Jan-96
8	AM-1	EDOS	ECS at the GSFC DAAC	EBnet	Service Request Disposition; PDSs (Level-0 data); ADSs (Back-up Level-0 Data); PDS and ADS Delivery Records; Physical Media Unit Delivery Record; Undetected Fault Isolation.	305-CD-014-001 Table 3.2-1	Jul-95
9	AM-1	EDOS	ECS at the LaRC DAAC	EBnet	Service Request Disposition; PDSs (Level-0 data); PDS Delivery Record; Undetected Fault Isolation.	305-CD-015-001 Table 3.2-1	Jul-95
10	AM-1	EDOS	ECS at the EDC DAAC	EBnet	Level-0; Quick Look, Status; and Coordination Data.	222-TP-003-005 Section 5	Dec-94
11	AM-1	FDF	EOC	EBnet	Basic connectivity test messages.	307-CD-001-003 329-CD-001-003	Oct-95 Oct 95
12	AM-1	FDF	ECS at the GSFC DAAC	NOLAN	Repaired Orbit Data.	305-CD-014-001 Table 3.2-1	Jul-95

Table 3-2. ECS Release A Data Flow Interfaces (2 of 7)

Node	Mission	Source	Destin-ation	Carrier/ Media	Data Content	Source	Date
13	AM-1	FDF	ECS at the LaRC DAAC	NOLAN	Refined Orbit/Attitude data.	305-CD-015-001 Table 3.2-1	Jul-95
14	AM-1	EOC	NCC	EBnet	Ground Configuration Message Requests.	305-CD-040-001 530-ICD-NCCDS/ MOC, Annex 4 329-CD-001-003	Oct-95 Sep-95 Oct-95
15	AM-1	EOC	EDOS	EBnet	Spacecraft and instrument commands.	510-ICD-EDOS Table 4.2.2-1 307-CD-001-003 329-CD-001-003	Jan-96 Oct-95 Oct-95
16	AM-1	EOC	FDF	EBnet	Basic connectivity test messages.	307-CD-001-003 329-CD-001-003	Oct-95 Oct-95
17	AM-1	EOC	ISTs	NSI	Spacecraft and instrument telemetry.	305-CD-040-001 307-CD-001-003 329-CD-001-003	Oct-95 Oct-95 Oct-95
18	TRMM	SMC at GSFC	TSDIS	Email/ Phone	Schedule Coordination & Adjudication for Data Exchange with DAACs; and Status Information.	209-CD-007-001 Section 4	Jan-95
19	TRMM	ECS at the GSFC DAAC	TSDIS	Exchange LAN	Levels 1A to 3 TMI, PR, GV, VIRS, and Combined Data Products for Reprocessing; Ancillary Data for Processing and Reprocessing; TRMM Orbit Ephemeris; TRMM Level-0 Housekeeping data.	209-CD-007-004 Figure 5-1	May-96
20	AM-1	ECS at the GSFC DAAC	EDOS	EBnet	Service Requests (Back-up data requests); Fault report; Fault Isolation Request; Level-0 data.	305-CD-014-001 Table 3.2-1	Jul-95
21	AM-1	ECS at the GSFC DAAC	FDF	NOLAN	Repaired/Retained Orbit Data Request.	305-CD-014-001 Table 3.2-1	Jul-95
22	AM-1	ECS at the GSFC DAAC	ASTER GDS	NSI	Algorithms, Source Code, Documentation, SCF Interaction; Level 1 Data Products; Product Requests; Data Products; Status; System and Network Management; User Authentication, User Data Search & Request, User Product Requests, Status.	209-CD-002-003 Figure 3-1	Mar-96
23	All Missions	ECS at the GSFC DAAC	Version-0 DAACs	EBnet	Directory Search Requests; Inventory Search Requests; Acknowledgments; Browse Request; Product Request; Statistics; Quit; Pong.	209-CD-011-004 Figure 4-2	Mar-96

Table 3-2. ECS Release A Data Flow Interfaces (3 of 7)

Node	Mission	Source	Destin-ation	Carrier/ Media	Data Content	Source	Date
24	AM-1	ECS at the GSFC DAAC	SCFs	NSI	ECS Software Package; I & T Requirements; Science Software Integration Test Status; Data Availability notices; Operational Science Data Production Software Package; Test Product Availability Message during Software I & T; QA Notification Specification Acknowledgement; Data Quality Request Notification; Data Delivered for QA; Processing Status; Resource usage; Reprocessing Request Acknowledgement; Product history.	209-CD-005-005 Figure 3.1-1	Mar-96
25	AM-1	ECS at the GSFC DAAC	NOAA ADC	NSI	Inventory Search; Browse Request; Product Request; Guide Search.	209-CD-006-005 Figure 5-1	Mar-96
26	AM-1	ECS at the LaRC DAAC	EDOS	Ebnet	Fault report; Fault Isolation Request; Level-0 data.	305-CD-015-001 Table 3.2-1	Jul-95
27	AM-1	ECS at the LaRC DAAC	ASTER GDS	NSI	Algorithms, Source Code, Documentation, SCF Interaction; Level 1 Data Products; Product Requests; Data Products; Status; System and Network Management; User Authentication, User Data Search & Request, User Product Requests, Status.	209-CD-002-003 Figure 3-1	Mar-96
28	All Missions	ECS at the LaRC DAAC	Version-0 DAACs	EBnet	Directory Search Requests; Inventory Search Requests; Acknowledgments; Browse Request; Product Request; Statistics; Quit; Pong.	209-CD-011-004 Figure 4-2	Mar-96

Table 3-2. ECS Release A Data Flow Interfaces (4 of 7)

Node	Mission	Source	Destin-ation	Carrier/ Media	Data Content	Source	Date
29	AM-1	ECS at the LaRC DAAC	SCFs	NSI	ECS Software Package; I & T Requirements; Science Software Integration Test Status; Data Availability notices; Operational Science Data Production Software Package; Test Product Availability Message during Software I & T; QA Notification Specification Acknowledgement; Data Quality Request Notification; Data Delivered for QA; Processing Status; Resource usage; Reprocessing Request Acknowledgement; Product history.	209-CD-005-005 Figure 3.1-1	Mar-96
30	AM-1	ECS at the LaRC DAAC	NOAA ADC	NSI	Inventory Search; Browse Request; Product Request; Guide Search.	209-CD-006-005 Figure 5-1	Mar-96
31	Landsat-7	ECS at the EDC DAAC	Landsat LPS	Landsat Network	Data Transfer Acknowledgment.	209-CD-013-003 Table 3-1	Mar-96
32	AM-1	ECS at the EDC DAAC	ASTER GDS	NSI	Algorithms, Source Code, Documentation, SCF Interaction; Level 1 Data Products; Product Requests; Data Products; Status; System and Network Management; User Authentication, User Data Search & Request, User Product Requests, Status.	209-CD-002-003 Figure 3-1	Mar-96
33	All Missions	ECS at the EDC DAAC	Version-0 DAACs	EBnet	Directory Search Requests; Inventory Search Requests; Acknowledgments; Browse Request; Product Request; Statistics; Quit; Pong.	209-CD-011-004 Figure 4-2	Mar-96

Table 3-2. ECS Release A Data Flow Interfaces (5 of 7)

Node	Mission	Source	Destin-ation	Carrier/ Media	Data Content	Source	Date
34	AM-1	ECS at the EDC DAAC	SCFs	NSI	ECS Software Package; I & T Requirements; Science Software Integration Test Status; Data Availability notices; Operational Science Data Production Software Package; Test Product Availability Message during Software I & T; QA Notification Specification Acknowledgement; Data Quality Request Notification; Data Delivered for QA; Processing Status; Resource usage; Reprocessing Request Acknowledgement; Product history.	209-CD-005-005 Figure 3.1-1	Mar-96
35	AM-1	ECS at the EDC DAAC	NOAA ADC	NSI	Inventory Search; Browse Request; Product Request; Guide Search.	209-CD-006-005 Figure 5-1	Mar-96
36	AM-1	ASTER GDS	ECS at the GSFC DAAC	NSI	Algorithms, Source Code, Documentation, SCF Interaction; Level 1 Data Products; Product Requests; Data Products; Status; System and Network Management; User Authentication, User Data Search & Request, User Product Requests, Status.	209-CD-002-003 Figure 3-1	Mar-96
37	AM-1	ASTER GDS	ECS at the LaRC DAAC	NSI	Algorithms, Source Code, Documentation, SCF Interaction; Level 1 Data Products; Product Requests; Data Products; Status; System and Network Management; User Authentication, User Data Search & Request, User Product Requests, Status.	209-CD-002-003 Figure 3-1	Mar-96
38	AM-1	ASTER GDS	ECS at the EDC DAAC	Tape	Algorithms, Source Code, Documentation, SCF Interaction; Level 1 Data Products; Product Requests; Data Products; Status; System and Network Management; User Authentication, User Data Search & Request, User Product Requests, Status.	209-CD-002-003 Figure 3-1	Mar-96
39	AM-1	ASTER GDS	ISTs (ASTER only)	ASTER LAN	One-day schedule; Short-term schedule.	209-CD-002-003 307-CD-001-003 329-CD-001-003	Mar-96 Oct-95 Oct-95

Table 3-2. ECS Release A Data Flow Interfaces (6 of 7)

Node	Mission	Source	Destin-ation	Carrier/ Media	Data Content	Source	Date
40	All Missions	Version-0 DAACs	ECS at the GSFC DAAC	Ebnet	Directory Search Results; Inventory Search Results; ftp and Integrated Browse Results; Product Results; Quit; Pong; NCEP Ancillary data.	209-CD-011-004 Figure 4-2	Mar-96
41	All Missions	Version-0 DAACs	ECS at the LaRC DAAC	EBnet	Directory Search Results; Inventory Search Results; ftp and Integrated Browse Results; Product Results; Quit; Pong.	209-CD-011-004 Figure 4-2	Mar-96
42	All Missions	Version-0 DAACs	ECS at the EDC DAAC	EBnet	Directory Search Results; Inventory Search Results; ftp and Integrated Browse Results; Product Results; Quit; Pong.	209-CD-011-004 Figure 4-2	Mar-96
43	AM-1	ISTs	EOC	NSI, EBnet for ASTER IST	Instrument planning, Instrument Microprocessor Memory Loads.	305-CD-040-001 307-CD-001-003 329-CD-001-003	Oct-95 Oct-95 Oct-95
44	AM-1	ISTs (ASTER only)	ASTER GDS	ASTER LAN	Basic connectivity test messages.	307-CD-001-003 329-CD-001-003	Oct-95 Oct-95
45	AM-1	ISTs	SCFs	Site Campus Networks	Instrument Analysis Results.	305-CD-040-001 307-CD-001-003 329-CD-001-003	Oct-95 Oct-95 Oct-95
46	AM-1	SCFs	ECS at the GSFC DAAC	NSI	Algorithms; Remote Access Session Dialog; Request for Operational Data Production Software Package; Request for Test Products after Software Integration and Test; Test Product Reviews; QA Notification Specification; QA Metadata Updates; Request for Processing Status; Request for Resource Usage; Reprocessing Requests.	209-CD-005-005 Figure 3.1-1	Mar-96
47	AM-1	SCFs	ECS at the LaRC DAAC	NSI	Algorithms; Remote Access Session Dialog; Request for Operational Data Production Software Package; Request for Test Products after Software Integration and Test; Test Product Reviews; QA Notification Specification; QA Metadata Updates; Request for Processing Status; Request for Resource Usage; Reprocessing Requests.	209-CD-005-005 Figure 3.1-1	Mar-96

Table 3-2. ECS Release A Data Flow Interfaces (7 of 7)

Node	Mission	Source	Destin-ation	Carrier/ Media	Data Content	Source	Date
48	AM-1	SCFs	ECS at the EDC DAAC	NSI	Algorithms; Remote Access Session Dialog; Request for Operational Data Production Software Package; Request for Test Products after Software Integration and Test; Test Product Reviews; QA Notification Specification; QA Metadata Updates; Request for Processing Status; Request for Resource Usage; Reprocessing Requests.	209-CD-005-005 Figure 3.1-1	Mar-96
49	AM-1	SCFs	ISTs	Site Campus Networks	Instrument Microprocessor Memory Loads.	305-CD-040-001 307-CD-001-003 329-CD-001-003	Oct-95 Oct-95 Oct-95
50	AM-1	NOAA ADC	ECS at the GSFC DAAC	NSI	Advertising Information; Dependent Valids Update; Inventory Search Result; Integrated Browse Result; FTP Browse Result; Product Result Message; Guide Result; NCEP Ancillary data.	209-CD-006-005 Figure 5-1	Mar-96
51	AM-1	NOAA ADC	ECS at the LaRC DAAC	NSI	Advertising Information; Dependent Valids Update; Inventory Search Result; Integrated Browse Result; FTP Browse Result; Product Result Message; Guide Result.	209-CD-006-005 Figure 5-1	Mar-96
52	AM-1	NOAA ADC	ECS at the EDC DAAC	NSI	Advertising Information; Dependent Valids Update; Inventory Search Result; Integrated Browse Result; FTP Browse Result; Product Result Message; Guide Result.	209-CD-006-005 Figure 5-1	Mar-96

The capability of the ECS to communicate and transfer data over the external interfaces in accordance with the F&PRS and applicable IRDs are verified during acceptance tests. Data content flowing across Release A interfaces include TRMM data from SDPF and simulated AM-1 data from EDOS; ancillary data from NOAA and FDF; schedule data to/from SDPF, ground configuration messages to/from NCC, Level-1 through Level-3 TRMM data from TSDIS; Landsat-7 Level-0, metadata and browse data from the Landsat LPS; and selected Level-0 through Level-4 to the SCFs. The context chart in Figure 3-2 graphically depicts Release A key interfaces between GSFC and LaRC. The context chart in Figure 3-3 graphically depicts the Release A

Landsat-7 and AM-1 key interfaces. The capability of the ECS to provide TRMM pre-launch ground system end-to-end test support, and AM-1 and Landsat-7 interface testing support are verified in acceptance tests for Release A. Tests to verify two-way inter-operability with the Version-0 system and migration and/or access of Version 0 data archives are also conducted as well as one-way inter-operability with NOAA.

Command and control interfaces to support AM-1 early interface testing are conducted. These tests include EOC planning, scheduling, command, control and monitoring of the AM-1 spacecraft; and CSMS system management and communications infrastructure.

The interfaces needed to support early Landsat-7 interface testing are also verified. These interfaces are those needed for: the receipt and storage of Landsat-7 level-0R data (viewable image data with radiometric and geometric information appended but not applied) at the EDC DAAC and the receipt and storage of Landsat-7 metadata and browse data at the EDC DAAC.

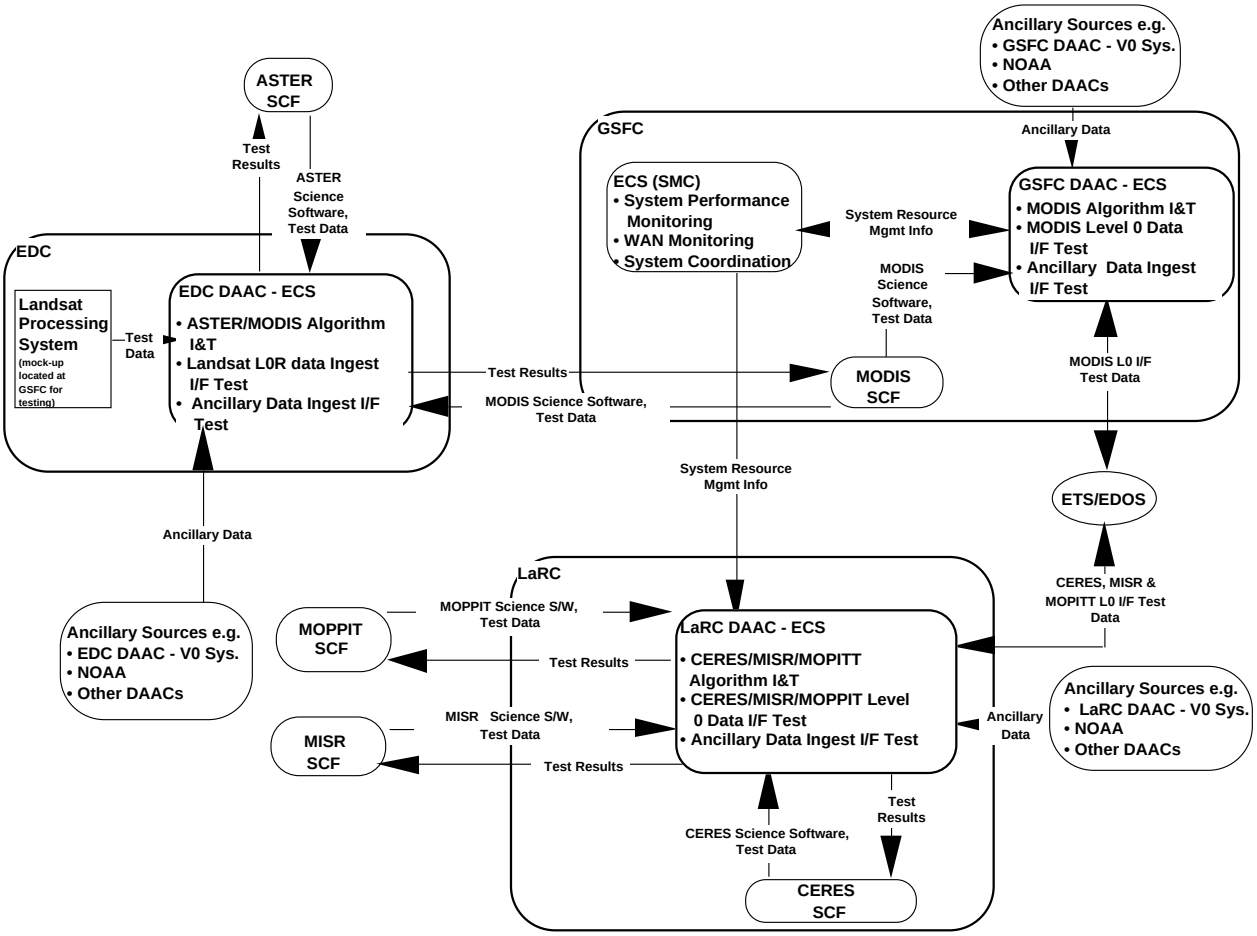

Figure 3-2. Release A Key Interfaces Between GSFC and LaRC

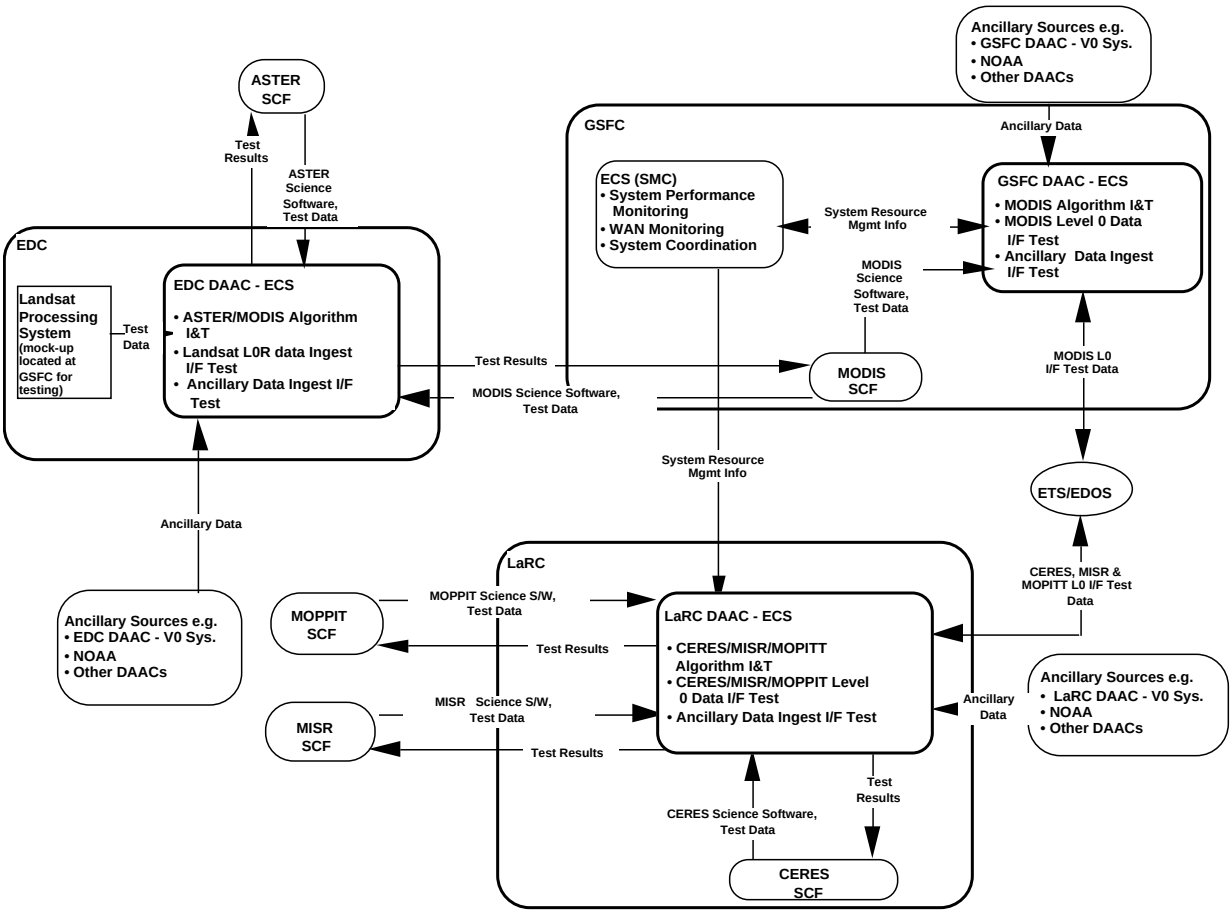

Figure 3-3. Release A Landsat-7 and AM-1 Key Interfaces

3.3 Acceptance Test Roles and Responsibilities

Acceptance testing is a formal process that requires the coordination of different organizations. Each organization has well defined roles and responsibilities for the acceptance testing process:

Independent Acceptance Test Organization (IATO): The IATO assigns a test manager to coordinate and run acceptance testing. The IATO also provides test conductors to execute the step-by-step procedures that are defined in the ATPr. Test conductors also write, collect, and track nonconformance reports and determine the impact of these reports on test plans, scenarios, test cases, and procedures.

Quality Office (QO): The QO provides a representative to witness the execution of acceptance testing. The QO also tracks the status of nonconformance reports and reviews them prior to closure to ensure that the required actions have been completed.

Configuration and Data Management Organization: The Configuration Management Office (CMO) coordinates with the IATO to capture the test configuration of software, hardware, test data, test tools, and documentation prior to test execution to ensure repeatability. They also capture and retain test outputs (e.g., test logs, data, and modified procedures) and distribute copies for test analysis. The product baseline, which is established prior to the RRR and includes test reports, is maintained by the CMO.

ECS Maintenance & Operations (M&O) Organization: As part of acceptance testing at the test site, the site manager assigns M&O personnel who are integrated into the test team to help execute acceptance tests. The early first-hand involvement of the site manager and his operations personnel in site acceptance testing provides the M&O Team with early visibility into each new release and hastens a smooth transition. This involvement and familiarity with ECS software in the stages before release to the user base greatly enhance the effectiveness and productivity of the M&O staff and positions a highly competent and responsive user support staff on-site at the DAACs. In addition, during the M&O phase, the IATO assists by providing benchmark tests to verify operational performance of the ECS system. The IATO provides guidance in acceptance testing during the verification of approved changes and enhancements.

ESDIS SI&T Contractor: The ESDIS Integration Contractor and the Independent Verification and Validation (IV&V) Contractor witness and monitors acceptance testing, as directed by the ESDIS SI&T, and the IV&V Contractor.

The Acceptance Test Team (ATT) consists of various personnel who assist the IATO Test Conductor during the acceptance testing phases. Listed below are the DAAC role players and a brief description of their responsibilities.

DAAC M&O Staff: Performs maintenance and operations activities, including hardware installations.

Network Analyst (NA): Performs network functions, including monitoring the network's performance and integrity.

Performance Manager (PM): Addresses system performance issues and concerns.

Resource Manager (RM): Manages ECS site resources.

System Administrator (SA): Performs overall system maintenance, including system backups and software upgrades.

Data Pull Technician: Manages ingest, pull and processing activities. (DAAC)

Production Planner: Populates and maintains the production planning database. (DAAC)

Production Scheduler: Reviews, approves and activates the daily production schedule. (DAAC)

Data Ingest Technician: Oversees ingest activities including the handling of physical media (e.g., mounting tapes) from which input data are read. Responsibilities also includes verifying that all data reported on data availability schedules, product delivery notices, etc. are received, validated, accounted for, and archived. (DAAC)

Data Distribution Technician: Oversees distribution activities including handling of physical media (e.g., mounting tapes) onto which ECS data are written. (DAAC)

Science Software Integration Test Team (SSITT): Verifies that any and all updates to science software are thoroughly tested and verified before being permanently installed at the DAACs.

Listed below are the EOC role players and a brief description of their responsibilities.

Flight Operations Team (FOT): Executes activities performed at the EOC workstations including system initialization, scheduling, commanding, telemetry, and analysis activities. This teams consists of the FOT Planner/Scheduler, FOT Operations Coordinator, FOT Spacecraft Activity Controller, FOT Spacecraft Evaluator, and FOT Instrument Evaluator. Listed below is a brief description of responsibilities.

FOT Planner/Scheduler -- Performs spacecraft and instrument command loading and schedule generation. This includes receiving planning and scheduling requests, instrument microprocessor memory loads, and command activity definitions from the Instrument Operations Teams (IOTs).

FOT Operations Coordinator -- Coordinates operational tests and deliveries of FOS software and the project database.

FOT Spacecraft Activity Controller -- Responsible for EOC ground system elements, hardware, software, communications links, command capability, and Local Site Manager (LSM) functions. This includes controlling and verifying ground script execution, verifying commands and load contents, transmitting and verifying commands and load uplinks, and monitoring ground system performance.

FOT Operations Controller -- Responsible for real-time interface coordination, approving real-time command uplinks, and resolving real-time anomalies.

FOT Spacecraft Evaluator -- Monitors spacecraft subsystems during real-time operations and assists in spacecraft trend analysis and anomaly recognition and resolution. This includes reviewing spacecraft activity logs and monitoring ground script execution, spacecraft command activity, and spacecraft health and safety.

FOT Instrument Evaluator -- Monitors and analyzes instruments during real≠ time operations and assists in instrument trend analysis and anomaly recognition and resolution. This includes reviewing activity logs and monitoring ground script execution, instrument command activity, and instrument health and safety.

FOT Database Manager -- Responsible for database administration of the project database and operational data files (ODFs), maintaining data base access, validating user access/privileges, and investigating/documenting violations.

Instrument Operations Team (IOT) -- Executes activities performed at the CERES, MISR, MODIS, MOPITT and ASTER instrument workstations. This team consists of the IOT Planner/Scheduler and IOT Instrument Evaluator. These positions are not necessarily the actual positions utilized at Instrument Support Terminals (ISTs), but rather they represent the two major FOS-related roles accomplished at ISTs.

IOT Planner/Scheduler -- Provides the FOT with planning and scheduling requests, instrument microprocessor memory loads, and command activity definitions.

IOT Instrument Evaluator -- Performs real-time instrument command and telemetry monitoring and analysis. Responsible for instrument anomaly detection and contingency procedure execution, instrument command load validation, and instrument performance and trend analysis.

This page intentionally left blank.

4. Test Tools

This section identifies and describes the test tools (COTS and custom coded software) used in the execution of the Release A ECS Acceptance Test and the generation of data sets. The tools for requirements traceability, computer aided software test and performance, configuration management, network status and monitoring, and external interface simulators are discussed below. Table 4-1 summarizes the test tool suite available for Release A acceptance tests. Figure 4-1 shows the test tool categories used to exercise Release A acceptance tests.

Table 4-1. Release A Test Tool Descriptions

TYPE	TOOL	DESCRIPTION
Requirements Traceability Tool	RTM	The Requirements and Traceability Management tool provides an audit trail that enables multiple requirements to be traced.
Capture and Playback Tool	XRunner	XRunner is an automated software testing system for X window applications. XRunner automates the full range of software testing needs. Some of the gained functionality includes: output synchronization, text recognition, and a high-level testing mode that operates directly on GUI objects.
Automated Client/Server Testing System	Load Runner	LoadRunner is an automated testing system for client/server applications on UNIX/X platforms. By running multiple users in parallel off the server, LoadRunner enables the automation of load testing, performance testing, and system tuning.
Configuration Management Tool	Clear Case	Clear Case uses Version Object Base (VOB) to store the software versions. A VOB is a virtual directory tree of sources and other objects that is mounted like a disk partition. A project may have many VOBs. Any changes made by the developer after the software has been frozen will be conducted on a branch. The test organizations are responsible for merging the fixes (branches).
Nonconformance Reporting and Corrective Action Tool	DDTS	DDTS is a UNIX change management and bug tracking system that racks and manages changes throughout the life cycle of a hardware or software product from initial requirements planning to obsolescence in the field. DDTS works in conjunction with ClearCase.
Network Management Framework	HP Open View	HP OpenView is used to monitor any device that supports the Simple Network Management Protocol (SNMP). This tool will aid us in determining the status of the network and the devices on the network.
Network Analyzer/Monitor	Network Analyzer/ Sniffer	The Sniffer Network Analyzer assist in performance testing and monitors and generates traffic on Ethernet and FDDI networks.
Network Performance Tool	Netperf	Netperf is a benchmark tool which measures various aspects of network performance, primarily focusing on bulk data transfer and request/response performance using either the TCP or UDP and the Berkeley Sockets interface.
Source Simulator	TRMM/ TSDIS I/F Simulator	The TRMM I/F Simulator provides the basic protocol and interface functions employed by the SDPF/TSDIS.
EOSDIS Test System	ETS	ETS provides the capabilities to simulate EOS AM-1 spacecraft and instrument low rate telemetry data and high rate science data for the EOC and DAACs. The ETS also simulates the EDOS interface with the ECS.

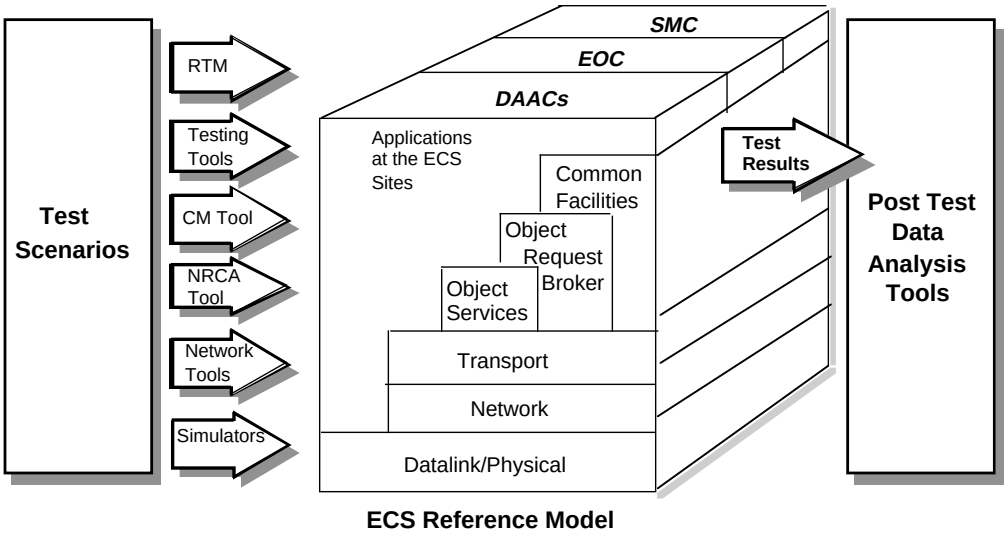

Figure 4-1. Release A Test Tool Integration

4.1 Requirements Traceability

The Requirements and Traceability Management (RTM) tools provides an audit trail for ECS requirements. This data dictionary provides definitions of classes and attributes in RTM database. Figure 4-2 depicts the RTM Class Definition and Table 4-2 provides a definition of each class.

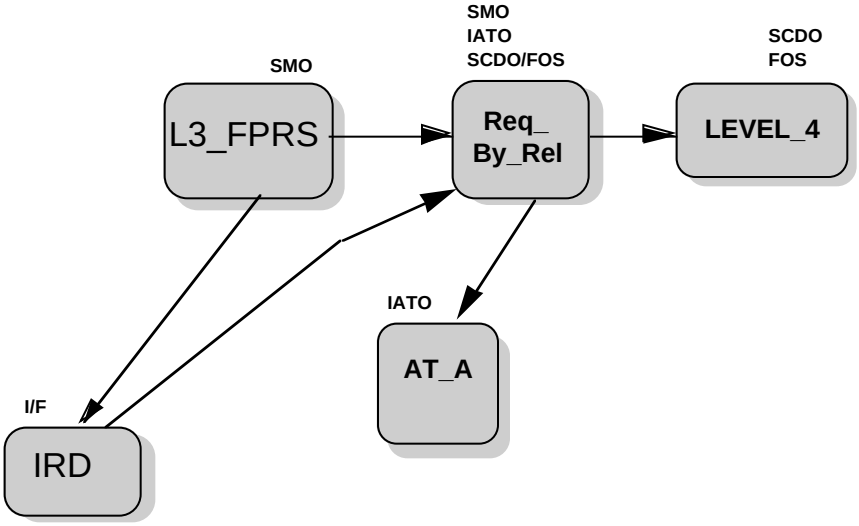

Figure 4-2. RTM Classes

Table 4.2 RTM Class Definitions

CLASS	DEFINITION
L3_FPRS	Contains the Level 3, Functional and Performance Requirements Specifications received from GSFC 07/94 (423-41-02). Objects in this class can be mapped to objects in LEVEL_2, IRD, itself, and REQ_BY_REL classes. All relationships are defined as many-to-many relationship.
REQ_BY_REL	Contains requirements allocated for each formal release and are expanded from L3_FPRS and IRD classes. It is used by development engineers to develop the Level 4 requirements. Objects in this class are mapped to objects in LEVEL_4, CCR, IRD, L3_FPRS, AT_A, AT_B, IT_Ir1, IT_A, IT_B, and IT_FOS classes. All relationships are defined as many-to-many relationships.
LEVEL_4	Contains Level 4 requirements which were expanded from the REQ_BY_REL class. Objects in this class are mapped to objects in REQ_BY_REL, IT_FOS, IT_A, IT_Ir1, IT_B, COTS, CCR, and COMPONENT classes. All relationships are defined as many-to-many relationship.
AT_A	Contains the system acceptance test sequences and test cases for A as identified in Acceptance Test Plan (ATP) and Acceptance Test Procedures. Objects in this class are mapped to objects in REQ_BY_REL class. Relationship between two classes is defined as many-to-many relationship.
IRD	Contains external interface requirements specified in Interface Requirements Documents (IRDs). Objects in this class are mapped to objects in L3_FPRS, CCR, and REQ_BY_REL classes. All relationships between classes are defined as many-to-many relationship.

4.2 Computer Aided Software Test and Performance Tools

The Mercury XRunner and LoadRunner are computer aided software test and performance test tools used to assist in the automation of testing. XRunner is designed to automate the test process by capturing, in a script file, keyboard, mouse input and system under test (SUT) responses, and then playing back those inputs and comparing the results to those stored in an expected results directory. LoadRunner is used to simulate a large number of actual users, in order to measure the response time of a server in a client/server application. Both tools offer sophisticated programming capabilities through a C based language called Test Script Language (TSL), that can be used to drive the system under test much more extensively than would be possible with manual testing. It also offers the virtue of repeating the test sequence with fidelity. The XRunner and LoadRunner tools also provide very reliable playback of user input. Specific usage of XRunner and LoadRunner in ECS acceptance tests are discussed below.

4.2.1 XRunner Usage

The primary use of the XRunner tool is the automation of functional tests that involve heavy use of graphical user interfaces. Examples of such user interfaces are the Release A desktop Graphical User Interface (GUI), DAAC or SMC operator screens, and EOC operator screens.

4.2.2 LoadRunner Usage

LoadRunner is utilized for all response time testing that involves the Release A desktop GUI and during End-to-End tests that involve large numbers of test and operations personnel at multiple sites.

4.2.3 Test Execution Reports

Upon completion of a test script execution, both XRunner and LoadRunner automatically generate test execution reports. LoadRunner generates performance graphs for analysis.

4.3 Configuration Management Tools

The ECS Configuration Management Organization (CMO) is responsible for the management and control of the Software Development Library (SDL), the Non-Conformance Reporting and Corrective Action (NRCA) System, and the baseline configuration management of hardware and software. The CMO uses two software tools to support its effort: ClearCase and Distributed Defect Tracking System (DDTS).

4.3.1 ClearCase

The CMO utilizes ClearCase to manage and control the SDL which is the central repository for ECS software including test verification items. ClearCase, an automated software tracking tool, manages multiple versions of evolving software components; tracks which versions were used in software builds; performs builds of individual programs or entire releases according to user≠ defined version specifications; and enforces site-specific development policies. ClearCase scripts are provided by CMO to be used throughout the software development life cycle in order to standardize and automate the tracking of the information in the SDL. The project instruction PI CM-1-019 Software Development Library, describes the SDL, the role of ClearCase in the SDL, and the associated ClearCase scripts.

The following test items are stored and baselined by the CMO, via the Software Turnover Process, as they are finalized.

- Verification documents, including test plans, procedures, scripts, and reports.
- Test data sets, software and hardware configuration, including test tools.
- •∞ Unit-tested components, data sets, Segment hardware configuration, and COTS software, as described in COTS Process Model, PI SD-1-013.
- Verified Segment/element threads and builds.
- Verified system builds
- Integration system build for a release.
- Evaluation of test results

The items are retrieved from the SDL, via ClearCase when required to perform various verification activities at the sites.

The ECS policies and procedures for baselining test items and retrieving test items from CMO is defined in PI CM-1-025, Software Development Handbook.

Since Acceptance Testing of the ECS is conducted within a baselined configured environment, ClearCase is installed at each test site; and CMO electronically deploys the binary files (executable) of ECS software, at each test site, from the ECS Development Facility (EDF). In order to maintain the integrity of the test script and test data, CMO deploys IATO's test scripts and test data, in the same manner they deploy ECS binary files. This allows the Acceptance Tester, at each test site, to maintain a baseline of changes to the test script and/or test data for the purpose of work around.

4.3.2 Distributed Defect Tracking System (DDTS)

The DDTS is a software tool used to support the NRCA system for the CMO. The DDTS records nonconformance's and reflects the progress of nonconformance Reports through resolution and captures necessary information to document that progress. Through the production of management reports, DDTS provides management visibility and metrics to insure that NCRs are being worked in a timely and effective manner. The policies and procedures governing the usage of DDTS on ECS are defined in the Non-Conformance Reporting project instruction (PI), SD-1-014.

The NRCA system is the process for identifying, investigating, and resolving problems with the ECS during development, integration, installation, and acceptance test. To facilitate disposition and resolution of problems, the NRCA system and its processes emphasize tracking of responsibility, effective communication and delegation of authority. The NRCA system utilizes the DDTS to record and track software nonconformances. DDTS is customized by ECS to accurately reflect the progress of NCRs through resolution and captures necessary information to document that progress. Through the production of management reports, DDTS provides management visibility and metrics to insure that NCRs are being worked in a timely and effective manner.

4.4 Network Status and Monitoring

The three network tools utilized in acceptance tests are the HP OpenView, Sniffer Network Analzer, and Netperf. Each are described below.

4.4.1 HP OpenView

The HP OpenView is network tool which monitors and controls the entire network environment at each ECS site. As a diagnostic tool, it has the capability to isolate faults quickly. The tool, which resides on the Local System Management (LSM) at each ECS test site, allows the user to display a map of the network environment at that local site for the LSM and the maps of all sites at the SMC. These maps are real-time interactive graphical representations which allow the user to detect network problems as they occur without having to update or refresh the display screen, and to diagnose network connectivity. The tool allows the user to create submaps of the map which can

be as small as a software component on the system. The Acceptance Test Team (ATT) utilizes this tool to introduce systems and/or network faults to the system.

4.4.2 Network Analyzer/Sniffer

The Network Analyzer/Sniffer is a performance testing tool which monitors and generates traffic on Ethernet and FDDI networks.

4.4.3 Netperf

Netperf is a benchmark tool which measures various aspects of network performance. It's primary focus is on bulk data transfer and request/response performance using either the TCP or UDP and the Berkeley Sockets interface.

4.5 External Interface Simulators

External interface simulators are used during acceptance testing when the real interfacing system is not available. For Release A, the simulators used for acceptance testing are described below.

4.5.1 TRMM Simulator (TRMMSIM)

The TRMM Simulator (TRMMSIM) is a subsystem of the DDF External Simulator (DESIM). The TRMMSIM provides the capability to test the ECS ability to ingest data from TSDIS and Pacor II (SDPF), and to send data to TSDIS. In order to perform these two tasks, the simulator consists of a consume part and a source part. The consume part of the simulator provides the capability to send a DAN and its associated data to, and receive a DAN and its associated data from an ECS DAAC.

The TRMMSIM operates in two modes, interactive and non-interactive. The interactive mode allows the user to modify and send message types (Authentication Response, DRVR, DDN, and DDA). This mode is useful when testing the interface for error handling. The non-interactive mode generates and sends the appropriate message type.

4.5.2 EOSDIS Test System (ETS)

The ETS is primarily designed to support ECS Release B and EOS Ground System (EGS) testing. For Release A, pending availability, the Low Rate System and the Multimode Portable Simulator is used for EOC testing. In this configuration, ETS provides simulated telemetry data.

4.6 Test Data

A variety of test data is required to exercise the Release A system at each site. This test data will be used in conjunction with the simulators described above to stimulate the system. Table 4-3 summarizes the missions, data sources and destinations and content required for Release A testing. Each of the site specific volumes contains detailed lists of test data sets.

Real test data provided by the instrument teams is used whenever possible. In situations where real data is not available, simulated data or similar heritage data is used for testing. The test data is validated and placed under configuration control prior to test execution.

Table 4-3. Release A Data Sources, Destination, and Data Content (1 of 2)

Mission	Source	Destination	Data Content	Test Data Source/Contact
AM-1	Aster GDS	ECS at the EDC DAAC	Algorithms; Level-1A&1B Data; Expedited Products; Product Status; and User Data Search&Order Dialog.	ESDIS Test Data Working Group
AM-1	Aster GDS	SMC at GSFC	Schedule; and Status Information.	ESDIS Test Data Working Group
AM-1	Aster GDS	EOC	Planning; Scheduling.	ESDIS Test Data Working Group
AM-1	EDOS	EOC	Real-Time Telemetry and Accounting.	ETS/GTSIM
AM-1	EDOS	ECS at the GSFC DAAC	Level-0;Expedited Telemetry, Status; and Coordination Data.	ETS/ESDIS Test Data Working Group
AM-1	EDOS	ECS at the LaRC DAAC	Level-0;Expedited Telemetry, Status; and Coordination Data.	ETS/ESDIS Test Data Working Group
AM-1	EDOS	ECS at the EDC DAAC	Level-0;Expedited Telemetry, Status; and Coordination Data.	ETS/ESDIS Test Data Working Group
AM-1	EDOS	SMC at GSFC	Status; and Coordination Data.	ETS/ESDIS Test Data Working Group
AM-1	FDF	EOC	Basic Connectivity Test Messages	TICTOC/FDF ENGINEERING ORG
AM-1	FDF	ECS at the LaRC DAAC	Repaired & Refined Orbit and Attitude Information.	TICTOC/FDF ENGINEERING ORG
AM-1	FDF	ECS at the EDC DAAC	Repaired & Refined Orbit and Attitude Information.	TICTOC/FDF ENGINEERING ORG
AM-1	FDF	ECS at the GSFC DAAC	Repaired & Refined Orbit and Attitude Information.	TICTOC/FDF ENGINEERING ORG
Landsat-7	Landsat LPS	ECS at the EDC DAAC	Directory & Guide Information; Level-0R Data.	VO DAACS
AM-1	NCC	EOC	Ground Configuration Messages	NCC Test System
TRMM	NOAA ADC	ECS at the GSFC DAAC	Ancillary and Correlative Data	Currently V0 DAACS
Mission	Source	Destination	Data Content	Test Data Source/Contact
TRMM	NOAA ADC	ECS at the LaRC DAAC	Ancillary and Correlative Data.	Currently VO DAACS
TRMM	NOAA ADC	ECS at the EDC DAAC	Ancillary and Correlative Data.	Currently VO DAACS
AM-1	SCF	EOC	Instrument software loads.	ESDIS Test Data Working Group
AM-1	SCFs	ECS at the GSFC DAAC	Algorithms.	ESDIS Test Data Working Group
AM-1	SCFs	ECS at the LaRC DAAC	Algorithms.	ESDIS Test Data Working Group
AM-1	SCFs	ECS at the EDC DAAC	Algorithms, LANDSAT L0R Data	ESDIS Test Data Working Group
AM-1	SCFs	ECS at the LaRC DAAC	CERES higher level products	ESDIS Test Data Working Group

Table 4-3. Release A Data Sources, Destination, and Data Content (2 of 2)

Mission	Source	Destination	Data Content	Test Data Source/Contact
TRMM	SDPF	ECS at the LaRC DAAC	CERES Level-0, Housekeeping, Expedited Telemetry and Definitive Orbit Data.	ESDIS Test Data Working Group
TRMM	TSDIS	SMC at GSFC	Schedule Coordination & Adjudication for Data Exchange with DAACs; and Status Information	Internally Generated
TRMM	TSDIS	ECS at the GSFC DAAC	PR and TMI Level-1A through Level-3 Data Products; GV Data; Request For Ancillary/Correlative Data; and TRMM Product Delivery Schedules.	ESDIS via TRMM Project
TRMM	TSDIS	ECS at the GSFC DAAC	VIRS Level-1A through Level-3 Data Products; Request For Ancillary/Correlative Data; and TRMM Product Delivery Schedules.	ESDIS via TRMM Project
All Missions	Version-0 DAACs	ECS at the GSFC DAAC	Inter DAAC and Cross DAAC Communications; Inter-Operability; and Data Transfer.	VO DAACS
All Missions	Version-0 DAACs	ECS at the LaRC DAAC	Inter DAAC and Cross DAAC Communications; Inter-Operability; and Data Transfer.	VO DAACS
All Missions	Version-0 DAACs	ECS at the EDC DAAC	Inter DAAC and Cross DAAC Communications; Inter-Operability; and Data Transfer.	VO DAACS

5. Test Execution and Coordination

This section describes the process by which formal acceptance testing is managed at the site on a daily basis. The responsibilities of the test manager and test engineers are also described.

5.1 Acceptance Test Planning

Acceptance test planning is formally presented in the Verification Plan (DID 401/VE1), the Acceptance Testing Management Plan (DID 415/VE1) and the Acceptance Test Plan (DID 409/VE1). Both the ATP and ATPr documents reference the requirements verification matrix contained in the Verification Specification (DID 403/VE1). Contents of the Verification Specification are, in turn, imported from the requirements matrix data base maintained by the RTM tool. The Configuration Management activities related to transferring software code is described in the ECS Configuration Management Plan (DID 102/MG1) and the Configuration Management Procedures (DID 103/MG3).

Volumes 1-5 of the ECS System Acceptance Test Procedures provides the detailed test procedures for each site. Appendix A provides the template and data field descriptions for the test procedures format used in these sections The sequence of activities that lead up to the completion of the Release A acceptance testing is shown in Figure 5-1. It shows the series of acceptance test activities that take place, how they relate to the major ECS reviews, and their relationship with the documents produced. It also shows the activities and their relationships with the System I&T, and Operations Phases of the Release A acceptance testing life cycle.

5.2 Acceptance Test Preparation

The initial activities of acceptance test preparation are conducted at the ECS Development Facility (EDF). First, an inventory of the resources needed to perform acceptance tests is taken. Items inventoried include test input data, automated test tools, and technical documentation. If any required items are found to be missing or insufficient for acceptance test performance, corrective action is taken. Prior to CSR, walk-throughs of the entire Acceptance Test Procedure are conducted at the EDF to ensure proper format, contents, and completeness of the test scenarios and test plan.Additionally, concurrent with the execution of I&T, critical acceptance test sequences and test cases are executed by IATO against the I&T baseline to ensure that any major problems with either the Release, or the Acceptance Test Procedures and resources, are found at the EDF. During the EDF test activities, discrepancies are documented as NCRs. NCRs written during this time frame are controlled by the Release A CCB.

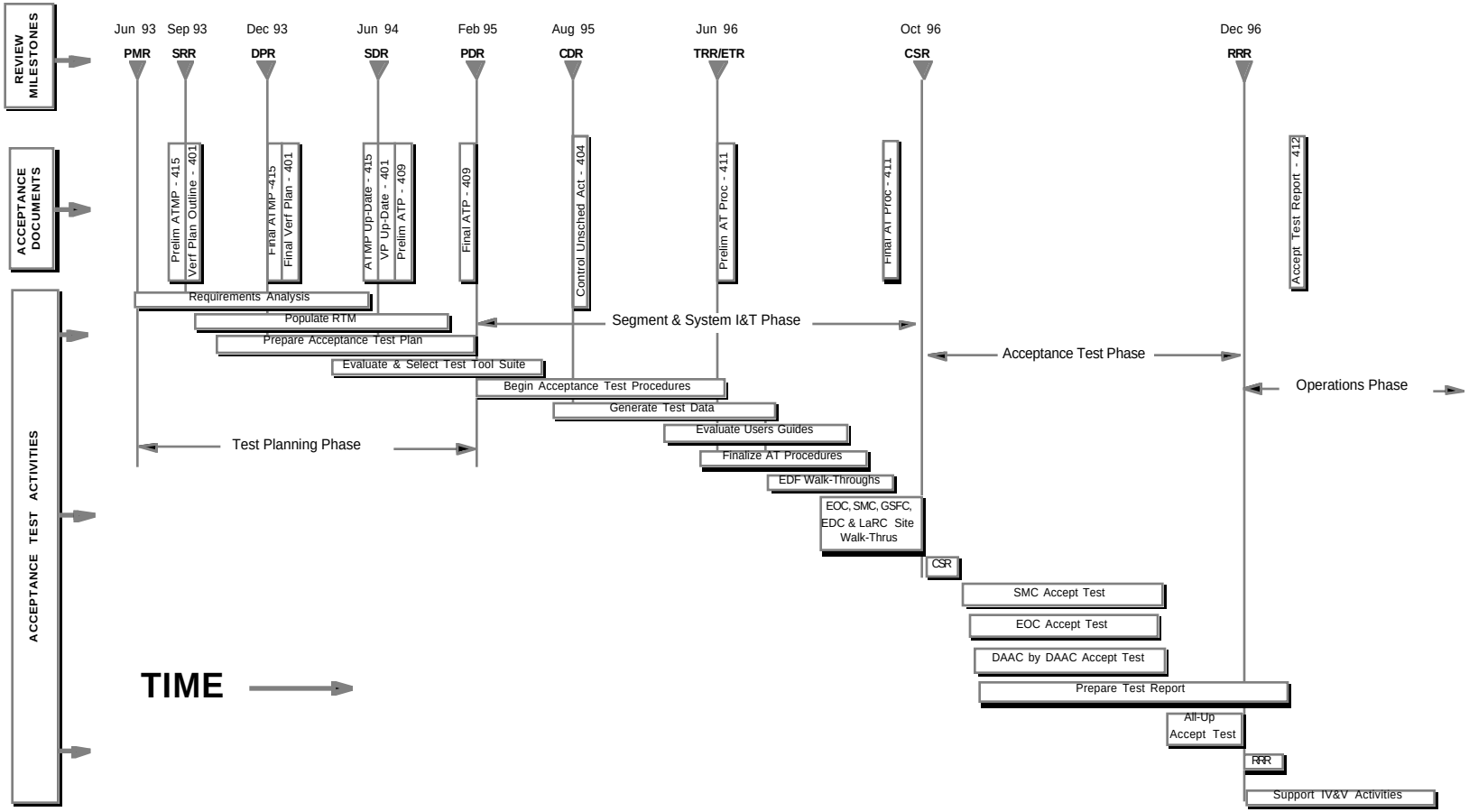

Figure 5-1. Release A Acceptance Test Life Cycle

5.2.1 Software Pre-Install

Approximately 30 days prior to CSR, an ECS software pre-installation is performed at the applicable operational sites. The software used is a snapshot to the ECS system undergoing final system integration at the EDF. The pre-install serves as a pathfinder for the install of the formal delivery occurring after CSR. The activity is led by a development organization team consisting of developers and system I&T. Support is provided by configuration management and acceptance testing personnel, assisted by the M&O personnel already on site. A critical function of the pre install is to perform the DAAC specific configuration of the ECS, such as verifying network addressing, enabling DAAC-unique functions, and tailoring COTS configuration files.

Discrepancies observed during the software pre-install are formally filed as NCRs. Changes to site-specific configuration files formulated as a result of pre-install are forwarded to the EDF for incorporation into the formal baseline. The formal installation of the release is accomplished at the sites immediately following CSR to support acceptance test implementation.

5.2.2 Release A Acceptance Test Readiness Reviews

In conjunction with CSR, Acceptance Test Readiness Reviews (ATRRs) are conducted at the applicable operational sites by the ECS Maintenance and Operations (M&O) organization. During this time, each site's readiness to receive Release A is assessed. The ATRR assesses plans for software installation and for conducting Acceptance Tests in parallel with on-going site operations.

5.2.3 Release A Consent to Ship Review

Before the shipment of ECS Release A to the operational sites, a CSR is held to address the readiness of the release for delivery to the operational sites for testing. The purpose of the CSR is to:

- Review the results of integration and test activities
- ≠ Review the approach for installation and test of the release at the operational sites to ensure that disruptions to ongoing operational services are minimal or nonexistent
- ≠ Review the status of test procedures for operational system integration and acceptance testing
- ≠ Determine the readiness of the equipment and staff at the operational sites for release installation

The CSR includes a review of the software pre-installs at the operational sites, and the acceptance test preparation activities at the EDF. CSR review items include:

- DID 324/405-I&T Report (preliminary)
- DID 411-Acceptance Test Procedures
- DID 512-Maintainability Demonstration Test Plan

- DID 521-CSR Tabulation of Non-conformance Reports
- DID 603-Operation Readiness Plan
- DID 609-Operations' Reference Manual
- DID 611-Mission Operations Procedures
- DID 625-Training Material

Based on the CSR presentation and the delivered CDRL documents, a recommendation is made to ESDIS to accept or reject Release A. ESDIS makes the formal decision to ship or not to ship the release.

5.3 Acceptance Test Implementation

Following a successful CSR, Release A is formally installed at the applicable operational sites. The formal installation replaces the pre-installation efforts. The formal installation of Release A includes custom code and commercial-off-the-shelf (COTS) software and, as applicable, executables, load modules, test data sets, test tools, and documentation. The formal installation at the operational sites is performed by the I&T organization, supported by the CMO and the M&O organization.

Prior to the execution of test scenarios at the test sites, three final checks are performed. The first check consists of a survey of the operational sites where the release is to be tested. This pre-test site check is to provide confidence that each operational site is properly configured for formal acceptance testing. The next pre-test check consists of performing a selected set of test cases from Ir1 to ensure that existing operations at the site are not adversely affected by the installation of the new release. The final check consists of a walk-through of the entire set of acceptance test procedures to ensure site compatibility for the release. In the event that any discrepancies are observed during these three checks, the discrepancies are filed as NCRs in the NRCA system.

5.4 Test Execution and Error Handling

When the final checks have been successfully executed the actual commencement of the formal acceptance test are coordinated with the Site Manager by the Test Manager. All acceptance tests are conducted under the direction of the Test Manager who has absolute authority regarding all aspects of the execution of the acceptance test. This authority includes the assignment of priority to NCR's and their disposition and impact on ongoing testing. This authority may be delegated by the Test Manager to the Test Conductor at specific times such as absences from the sites or off shifts hours. For additional information concerning duties of other acceptance test participants, see the Verification Plan (DID 401/VE1).

At each test site, site-specific and all up test phases are executed. The site-specific test focuses on each individual site, and the all-up test phase includes all sites and elements testing simultaneously. At each site, the final scenario to be executed is an acceptance test demonstration, which exercises a comprehensive sequence of events verifying the overall site-specific and ECS-wide capabilities of the release.

In unusual circumstances, where there is an unscheduled interruption in the execution of a planned Acceptance Test session, the Procedures For Control of Unscheduled Activities During Verification for the ECS Project (DID 404/VE2) may be invoked. This document describes the process used to resolve unplanned activities during the verification process.

5.4.1 Non-Conformance Reporting

Discrepancies observed during Acceptance Testing are filed as NCRs and entered into the NRCA system for disposition by the Release A CCB. If the CCB determines that modifications are necessary, the software is returned to the developers for correction. After the NCRs are corrected and test criteria have been met, the results are reported to the Release A CCB. The Release A CCB authorizes or rejects delivery of the software fixes to the operational sites. Figure 5-2 graphically depicts the NCR process throughout the acceptance test phase. Figure 5-3 provide sample reports available from the NRCA system.

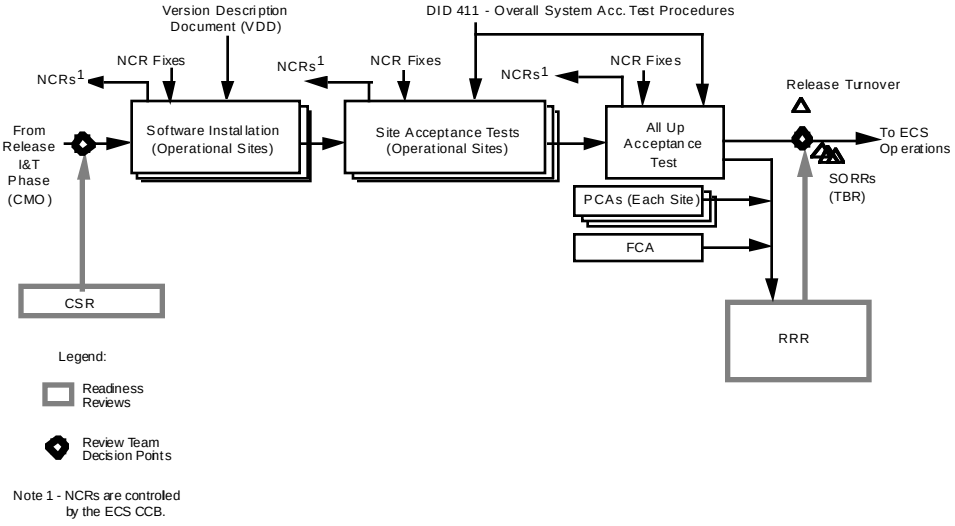

Figure 5-2. Acceptance Test NCR Process

Total Problems by Severity

Severity 1	25	(17%)
Severity 2	35	(24%)
Severity 3	48	(33%)
Severity 4	23	(16%)
Severity 5	15	(10%)
TOTAL	146	

Unresolved Problems

Severity 1	0
Severity 2	0
Severity 3	0
Severity 4	0
Severity 5	0
TOTAL	0

Total Problems by State

New	0	(0%)
Assign-Eval	0	(0%)
Assign-Fix	0	(0%)
Fixed	0	(0%)
Assign-Verify	0	(0%)
Verified	0	(0%)
Closed	142	(97%)
Duplicate	4	(3%)
TOTAL	146	

Figure 5-3. NRCA System Sample Reports

5.4.2 Acceptance Test Delays

As acceptance testing continues, the severity and number of unresolved NCRs are monitored on a daily basis, and compared with the established acceptance test criteria. As circumstances dictate, it may be necessary to halt testing based on the number and severity of open NCRs and resume testing when they have been corrected and incorporated in a new test version. Table 5-1 describes the discrepancy classification and priority scheme. Also, when an NCR documents an instance that impedes further testing, acceptance testing may be halted at the discretion of the Test Manager. In such cases, the release is returned to the responsible development organizations.

Table 5-1. Discrepancy Classification and Priority

Classification	Description
Severity 1	Catastrophic bug without work around that causes total failure or unrecoverable data loss.
Severity 2	Bug which severely impairs functionality. Work around might exist but is unsatisfactory.
Severity 3	Bug that causes failure of non critical system aspects. There is a reasonably satisfactory work around.
Severity 4	Bug of minor significance. Work around exists or, if not, the impairment is slight.
Severity 5	Very minor defect. Work around exists or the problem can be ignored.

CM tracks the product changes and revisions that result from correcting nonconformances. The revised version is returned to the test site. The acceptance test conductor then retests the new version using the scenarios that uncovered the original discrepancy to determine if the nonconformance was corrected. In addition, some regression testing may be conducted to make sure that the fix has not adversely affected other functions previously tested.

5.4.3 Discrepancies At Other Sites

As the acceptance testing proceeds from site to site, discrepancies may be uncovered which were not observed during tests at previous sites. If the mitigation of these discrepancies requires the generation of a new release version, retesting of the new version at each site is conducted during the all-up ECS acceptance test. Additional information on testing during verification is found in the Procedures for Control of Unscheduled Activities During Verification (DID 404-CD-001-001).

5.4.4 Physical Configuration Audits

The objective of the Physical Configuration Audits (PCAs) is to verify at each operational site that the “as-built” Release conforms to its design documentation. The PCA includes a detailed audit of engineering drawings, specifications, technical data for hardware; and a detailed audit of design documentation, listings, and manuals for software. The PCAs are conducted by an ECS Project team lead by CMO, and witnessed, at their option, by the ECS Project Quality Office (QO) and ESDIS. The results are presented at the Release Readiness Review (RRR) and documented in DID 506, Audit Reports. Approval of the Release A PCAs by ESDIS establishes the formal Product Baseline for Release A.

5.4.5 Functional Configuration Audit

The objective of the Functional Configuration Audit (FCA) is to verify that Release A’s actual performance complies with its requirements and interface specifications. FCAs for Release A are satisfied by an inspection of the Acceptance Test results and are conducted by an ECS Project team led by CMO. The FCA activities are witnessed, at their option, by the ECS Project Quality Office (QO) and ESDIS. The results are presented at the Release Readiness Review (RRR) and documented in DID 506, Audit Reports.

5.4.6 Release Readiness Review (RRR)

After testing is complete, the IATO leads the Release Readiness Review (RRR) and reports on the results of the Release Acceptance Test to the ESDIS review team. The results presented in the RRR provides the basis by which ESDIS determines if the release is ready to proceed to IV&V operations. The ECS System Acceptance Test Report (DID 412/VE2) and the Acceptance Data Package (DID 535/PA1) are delivered to the Government four weeks after RRR to provide detailed test results, their analysis and a summary of open items to be corrected in the next version.

5.5 Test Logs

The test results are logged into the Test Conductor's site test log on a daily basis. Each entry contains the time and date, test procedure number, and results of the test procedure, including NCRs written during the tests. Figure 5-4 is an example of the test log summary used for acceptance tests. Any deviations from the test procedures is recorded in the test logs.

In addition, the actual procedures are marked up to indicate temporary (black or blue ink) and permanent (red ink) changes. Refer to the Procedures For Control of Unscheduled Activities During Verification for the ECS Project (DID 404/VE2) for the detailed process. All procedure markups, test logs, and supporting documentation are included in the formal Test Report to be delivered following RRR.

Sequence:	
Test Procedure Name:	
Test Procedure ID:	
Test Location:	Site:
S/W Config./ Version:	
H/W Config./ Host Names:	
Test Data:	
Test Tools/ Scripts:	
Test Date:	
Witness(es):	
Comments:	Test Time:
NCRs Written:	
NCRs Verified:	
NCRs Un-Verified:	
n Pass	Fail	Partial Pass/Fail
1st Run	Formal Run	Retest	Release
Tester Signature(s)	**Witness Signature(s):**
_____	_____
_____	_____
_____	_____

Figure 5-4. Test Log Summary

This page intentionally left blank.

6. Release A Test Schedule

The current plans call for conducting Release A acceptance testing during the two month period following the CSR, which is scheduled to occur October 1, 1996. The plan specifies conducting acceptance tests in three sessions. The first session occurs during the first three week period following CSR at SMC, EOC, GSFC, and LaRC. The second session occurs the following two weeks at EDC, with SMC and EOC remaining involved to participate where mutual testing is required. The final session occurs during the remaining three weeks of the period. During the final three weeks an All-Up End-to-End session occurs with all five sites participating.

6.1 Test Schedule

Figure 6-1 includes the detailed activity schedule for acceptance tests. The detailed test schedule for individual sites is included in the respective volume.

Several assumptions were made for the overall acceptance test schedule.

1) Each test will take approximately 3 hours to execute,
2) Work proceeds five days per week, 8 hours/day,
3) No more than 2 tests will be ongoing at any one time at each site,
4) No problems/failures/delays occur.

These assumptions are validated or adjusted during the various test activities described in Figure 6-1. As schedule adjustments are made, the details are presented during technical interface and management meetings with both the ECS project personnel and the Government.

The final detailed site schedules are coordinated with each site prior to the conduct of acceptance tests and during site personnel interface meetings. The final schedule includes dates, times and duration for all formal acceptance testing that may occur at each site.

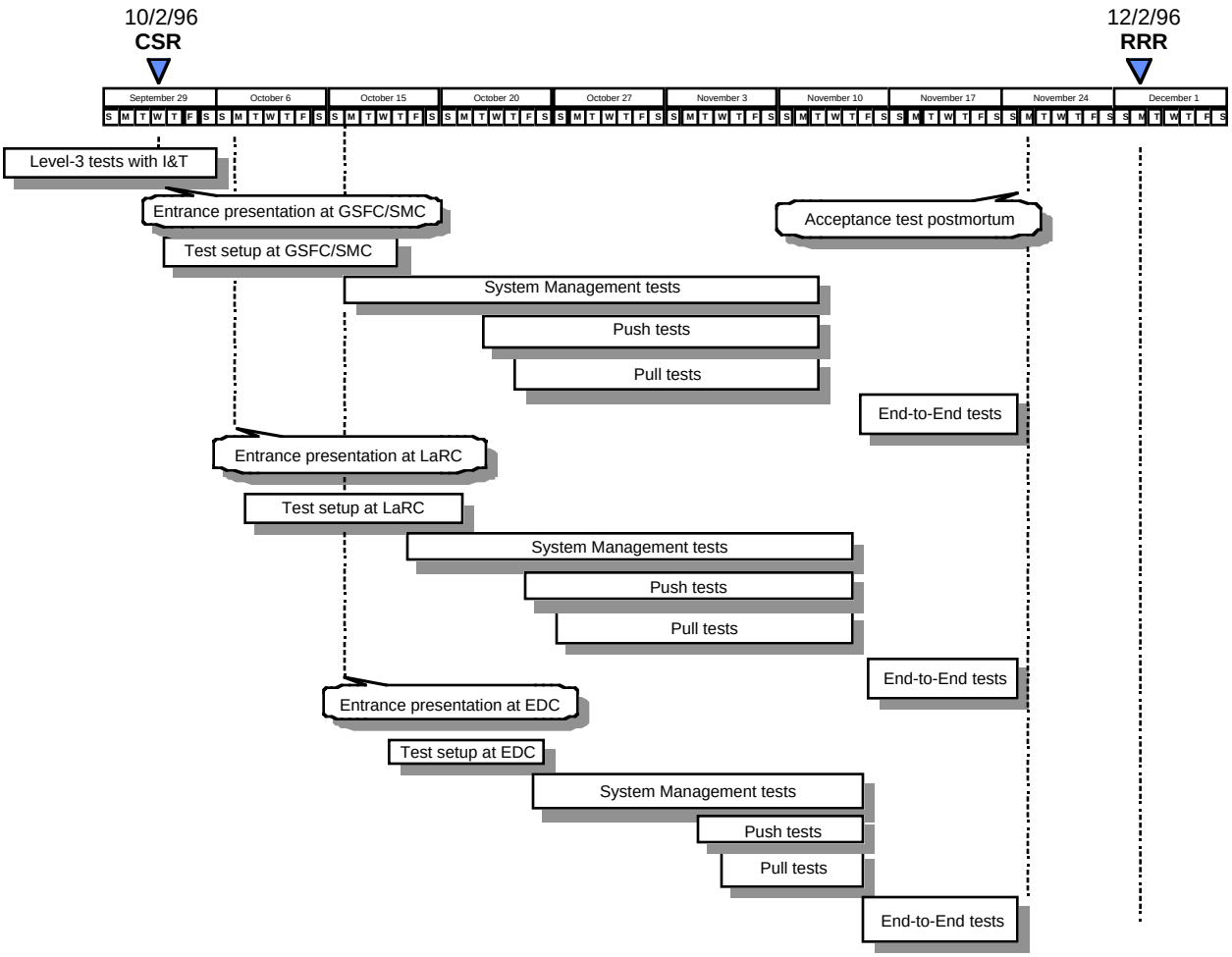

Figure 6-1 Release A Detail Test Activity Schedule

7. Overview

Release A of ECS supports the early operational stages of the Tropical Rainfall Measuring Mission (TRMM) and low level testing of ECS external interfaces. The TRMM Release follows an earlier ECS delivery, referred to as Interim Release 1 (Ir1), which provided certain enterprise infrastructure in preparation for down stream deliveries. The infrastructure delivery of ECS, involves three Distributed Active Archive Centers, these being the Goddard Space Flight Center (GSFC), the Langley Research Center (LaRC), and the EROS Data Center (EDC). Even though, only two of the DAACs (GSFC and LaRC) directly support the TRMM effort all three are updated to the TRMM level at Release A to allow for interface testing for future ECS releases. For Release A, the Ir1 configurations of GSFC and LaRC are updated with major hardware and software deliveries while EDC, which is not part of TRMM operations, receives a minor update to support interface testing.

The EDC Distributed Active Archive Center (EDC DAAC) is one of the eight DAACs that are part of NASA's Earth Observing System Data and Information System (EOSDIS). These DAACs are generally organized to support specific scientific disciplines. The objective of the EDC DAAC is to archive science data and provide support services to its users in the discipline areas of land science. EDCs principle responsibilities as a DAAC include supporting global change research on conditions and processes existing and operating at or near the land surface, especially as they relate to biology, geology, hydrology, limnology, and ecology and supporting studies of conditions and processes affecting land-atmosphere and land-ocean interactions, and attempts to model the role and influence of these process and interactions in the history and evolution of the total Earth system.

7.1 EDC Release A Functions

The EDC Release A version of ECS will provide the hardware, software, and operations to:

- test message passing to receive science data (Landsat-7);
- test message passing to receive ancillary data required by algorithms;
- test message passing to receive science algorithms, and
- test EDC's facilities to integrate science software for execution on product generation systems.

The EDC Release A version of CSMS will provide the hardware, software, and operations to:

- provide EBnet links among the Release A Distributed Active Archive Centers (DAACs) and Goddard Space Flight Center (GSFC) mission operations and monitoring centers to support exchange of mission-related data;
- provide an EBnet backbone for the DAAC's internal LAN, and

- support status/configuration information exchange for resource monitoring test efforts.

The EDC DAAC includes all of the ECS Release A communications subsystems but, because EDC does not support the TRMM Mission, EDC has only the Release A SDPS subsystems needed to do basic science software integration and testing and enough of the ingest subsystem to do message passing for Landsat-7 interface testing.

7.1.1 DAAC-Specific Mission and Operations Activities

ECS subsystems provide mission and operations functionality for Release A at LaRC and GSFC. There are no ECS TRMM operations at EDC, however, during Release A time-frame, EDC will continue to have ECS technical support available during Ir1. Key EDC operations during this time-frame are directly related to interface test support and science software integration and test. Specific ECS functionality provided to support these activities at the EDC ECS DAAC include:

- Hardware and software components to provide capabilities to exchange messages and transfer Landsat-7 data. Message validation and limited data checking is supported. Temporary storage of messages and data to validate interface testing is provided for the ingest of data from Landsat-7.
- Science software integration and test to include support to integrate Version 1 science software for EOS-AM-1 instruments (ASTER and MODIS) into the DAAC. SDPS components to support science software integration and test are provided by the Data Processing Subsystem. Data Processing hardware and software components provide the capabilities to validate that the science software operates in the DAAC environment including standards checking, integration with the SDP Toolkit, and execution on the DAAC processing resources.

7.2 EDC Release A External Interfaces

The EDC ECS DAAC will interface with multiple entities external to the DAAC. The ECS subsystem-specific DID305 design documents address the interfaces generically in a series of tables supported by textual explanations. Figure 7-1 schematically illustrates the interfaces between the ECS subsystems at the EDC DAAC and its external entities (sinks and sources of data). The figure enumerates data flows which are elaborated upon in Table 7-1.

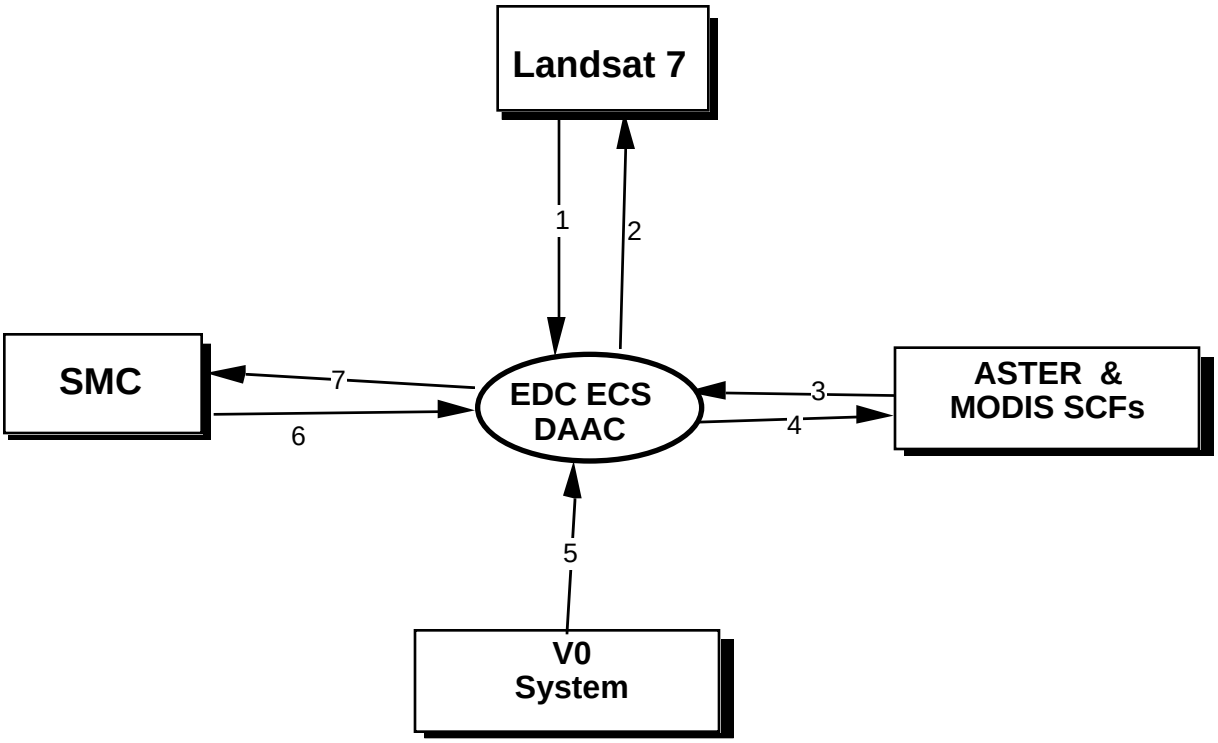

Figure 7-1. EDC ECS DAAC External Interfaces

Table 7-1. EDC External Interfaces

Flow No.	Source	Destination	Data Types
1	Landsat 7	Ingest	Metadata
1	Landsat 7	Ingest	L0 Science Data
1	Landsat 7	Ingest	Activity Calendar
1	Landsat 7	Ingest	Payload Correction Data
1	Landsat 7	Ingest	Mirror Scan Correction Data
1	Landsat 7	Ingest	Calibration data
1	Landsat 7	Ingest	Browse Data
1	Landsat 7	Ingest	Directory and Guide Information
2	CSS	Landsat 7	Data acknowledgment
3	SCF	Ingest	Status
3	SCF	Ingest	Metadata/updates
3	SCF	Ingest	Documents
3	SCF	Ingest	Algorithms/Updates
3	SCF	CSS (DAAC ops via email)	Test Reviews by SCF
3	SCF	CSS (DAAC ops via email)	Request for Resource Usage
4	CSS (DAAC ops via email, kftp)	SCF	Toolkit Delivery and Update Package
4	CSS (DAAC ops via email, kftp)	SCF	Test Results, QA, and Production History Data
4	CSS (DAAC ops via email, kftp)	SCF	Resource Usage
4	CSS (DAAC ops via email, kftp)	SCF	Status
5	V0 System	Ingest	Ancillary data
6	SMC	MSS	Policies
6	SMC	MSS	Conflict Resolution
6	SMC	MSS	Procedures
6	SMC	MSS	Directives
7	MSS	SMC	Conflict Resolution Request
7	MSS	SMC	Status
7	MSS	SMC	Performance

Note: Interfaces identified are included for test purposes only.

The following further describes the external entities, including those identified to support interface testing:

- Landsat-7—This interface supports early Landsat-7 interface testing. Potentially, metadata, status, quality control products, calibration data, correlative data, and documentation are examples of things that cross this interface. During the Release A time frame, this interface will be used to support interface testing. This is a manual interface which uses limited ingest functionality provided to EDC at Release A.
- ASTER and MODIS SCF—This interface supports the ASTER and MODIS Instrument Teams. Potentially, algorithms, metadata, status, quality control products, standard products, calibration data, correlative data, algorithm updates and documentation are examples of things that cross this interface. During the Release A time frame, this interface will be used to support interface testing and science software test and integration activities. This is a manual interface which does not invoke the limited ingest function provided to EDC at Release A; SCF personnel are able to remotely log on to equipment and/or use FTP to deliver/receive data from the DAAC. Note: as part of an SCF-like interface the ASTER GDS will send science software (via media) to the DAAC for storage.
- Version 0 System—This interface to EDC ECS DAAC supports access to the V0 holdings. It is used to support the interoperability required for cross-DAAC access.
- SMC—This interface provides the capability for the EDC DAAC to receive performance information, processing status, scheduling and policy data and user registration information. Policy data includes that established by the ESDIS project. The GSFC DAAC sends it system performance and status reports to SMC as part of this interface.

7.2.1 EDC Facility and Test Environment

The EDC is located at the Sioux Falls, South Dakota. Figure 7-2 shows the EDC layout.

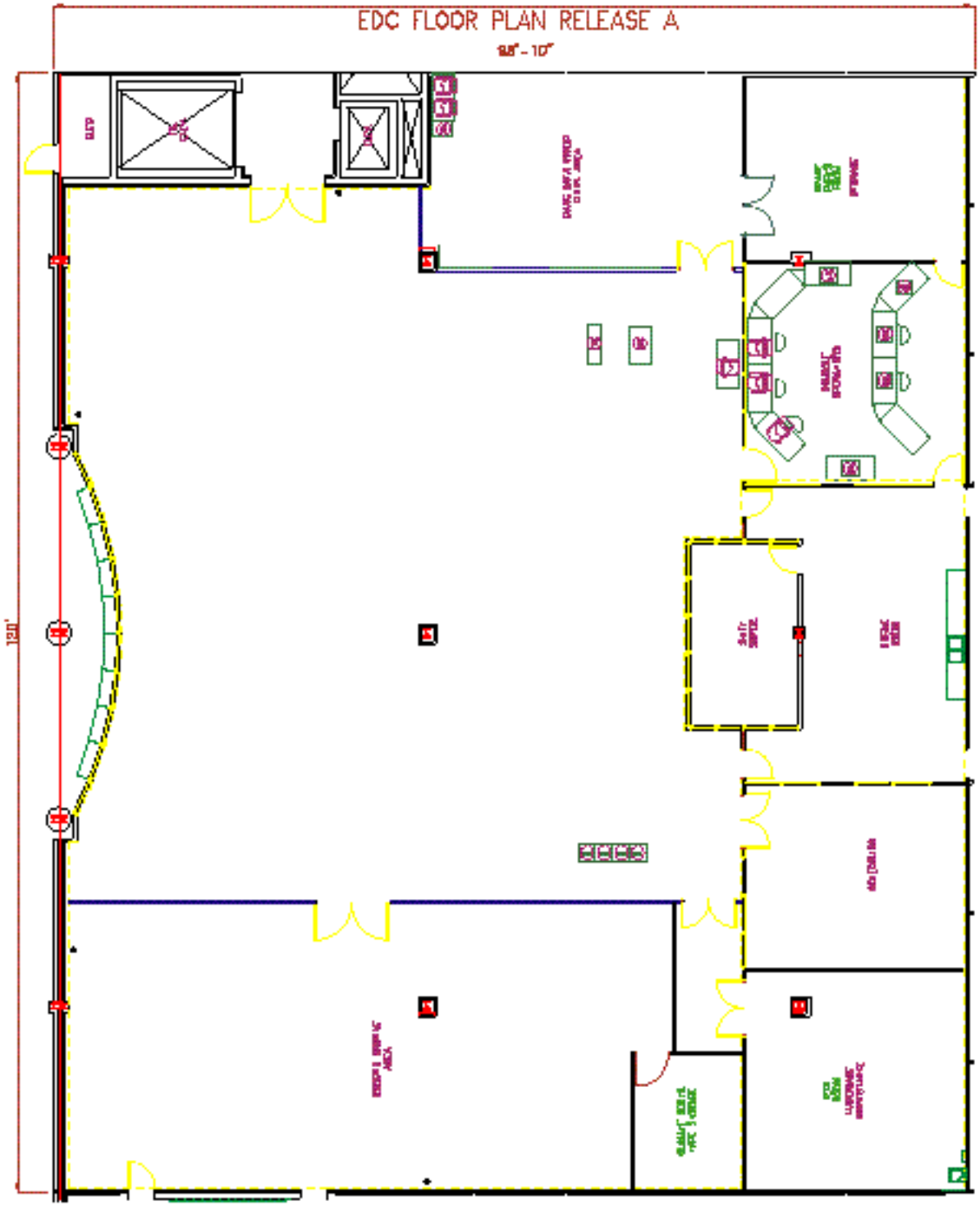

Figure 7-2. EDC Floor Plan

7.2.2 EDC Test Environment Safety Considerations

The Hazard Analyses for the ECS Project (DID 513) considered both hardware and software caused hazards for each element and segment of ECS. Hazards to ECS personnel and to ECS equipment, and potential hazards external to ECS were considered. This analysis concluded that the effect of ongoing and future planning and implementation processes to purchase, verify, integrate and test, install, operate and maintain COTS hardware minimizes the potential for a ground system hazardous condition to personnel or equipment. These various processes and the documents that describe them are:

- Procurement of COTS hardware to commercial practice UL performance and safety standards. Other commercial standards such as ANSI, BICSI, CCITT, EIA, IEEE, ISO, and NEC may also be applicable. The COTS hardware installed in the user environment has been engineered for the user desktop operating environment with enclosed components and no exposure to moving parts or electrical discharge. The COTS hardware installed in the data center environment will be accessible only to authorized, trained and certified operators and maintainers.
- Installation and Facility Planning to provide the DAACs with site specific Installation Plans and the ECS Facilities Plan (DID 302) to provide the planning necessary to assure that each ECS component will meet all requirements for interfacing with the facilities in which they are located. The Facilities Plan will contain physical layout, electrical power requirements, air conditioning requirements, antenna foundation, final equipment layout, mechanical/electrical loads, and functional arrangements.
- Environmental Control Planning to identify, in the Environmental Control Plan (DID 532), suitable environmental and cleanliness controls for all areas used for the operation, storage, maintenance, repair, inspection, or test of system equipment.
- Maintenance Planning, in the COTS Maintenance Plan (DID 613), to describe policies and procedures to be applied to maintenance of all hardware and software under M&O responsibility.
- M&O Procedures and the Operational Readiness Plan (DID 603) to describe the processes to assure all elements are in a state of operational readiness at all times.
- M&O Personnel Certification and Training to define the certification and COTS training required to prepare personnel to operate, maintain, and use the ECS. The COTS Training Plan (DID 622) and the M&O Certification Plan (DID 626) detail the approach and procedures required.
- Security Planning documents the approach to physical, informational and personnel security in the ECS Security Plan (DID 214).
- Disaster Recovery and Emergency Preparedness Planning is contained in the EDF Disaster Recovery Plan which provides for the safety and the protection of HAIS and the safeguarding of NASA computer resources and data assets. The Emergency Preparedness Plan focuses on personnel, visitors, and non-data assets.

During the pre-test meeting with EDC management, the following safety risks are determined:

a. Identification of hazardous situations and/or operations

b. Precautions and safety instructions to insure the safety of all personnel

c. Precautions and safety instructions to prevent degradation of test articles and measuring equipment

d. Environmental and/or other conditions to be maintained within tolerances

e. Specifications for facility, equipment maintenance, housekeeping, certification, inspection, safety and handling requirements before, during and after test activities.

The ATO Test Conductor coordinates with EDC and ECS management and maintenance and operations personnel, and the Quality Office representatives concerning safety issues. If equipment, environmental, or personnel safety concerns arise, the Test Conductor immediately takes steps to ensure the safety of the personnel and equipment, notifies EDC management, and coordinates corrective actions.

7.3 EDC Configuration

The EDC capabilities are selected from two ECS design segments referred to as the Science Data Processing Segment (SDPS) and the Communications and Systems Management Segment (CSMS). Figures 7-3 and 7-4 illustrate the SDPS and CSMS subsystems and their components.

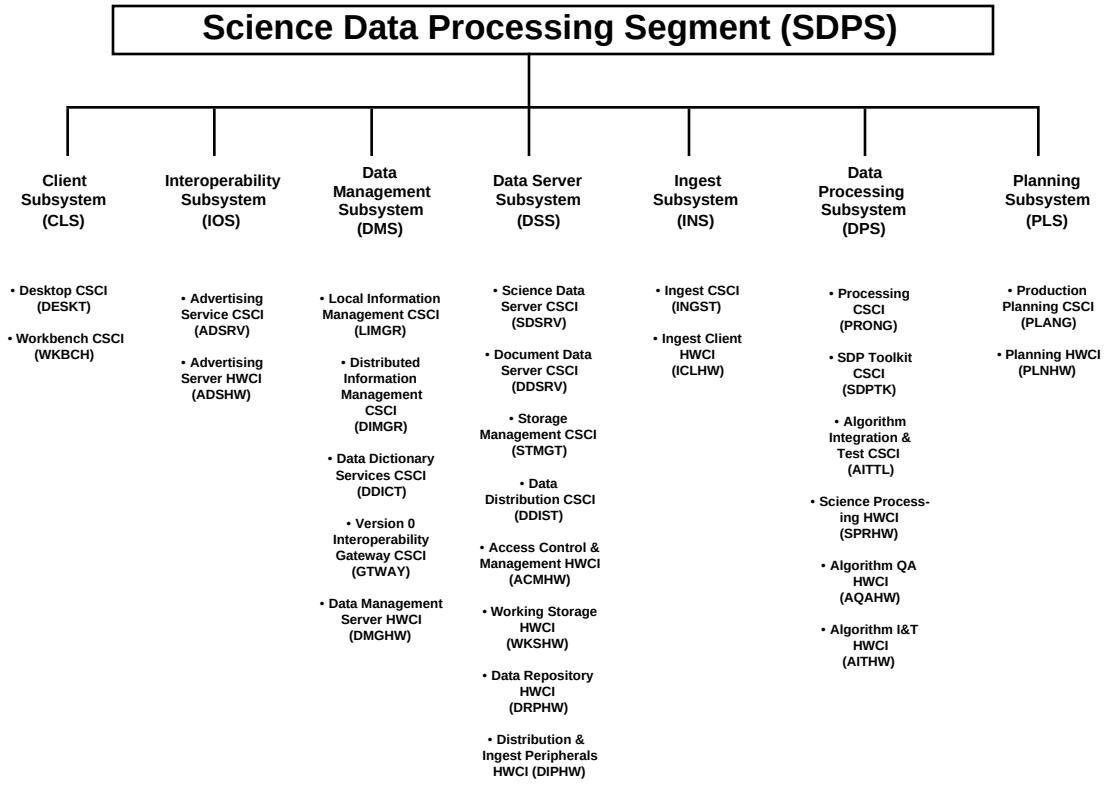

Figure 7-3. SDPS Subsystems and Components

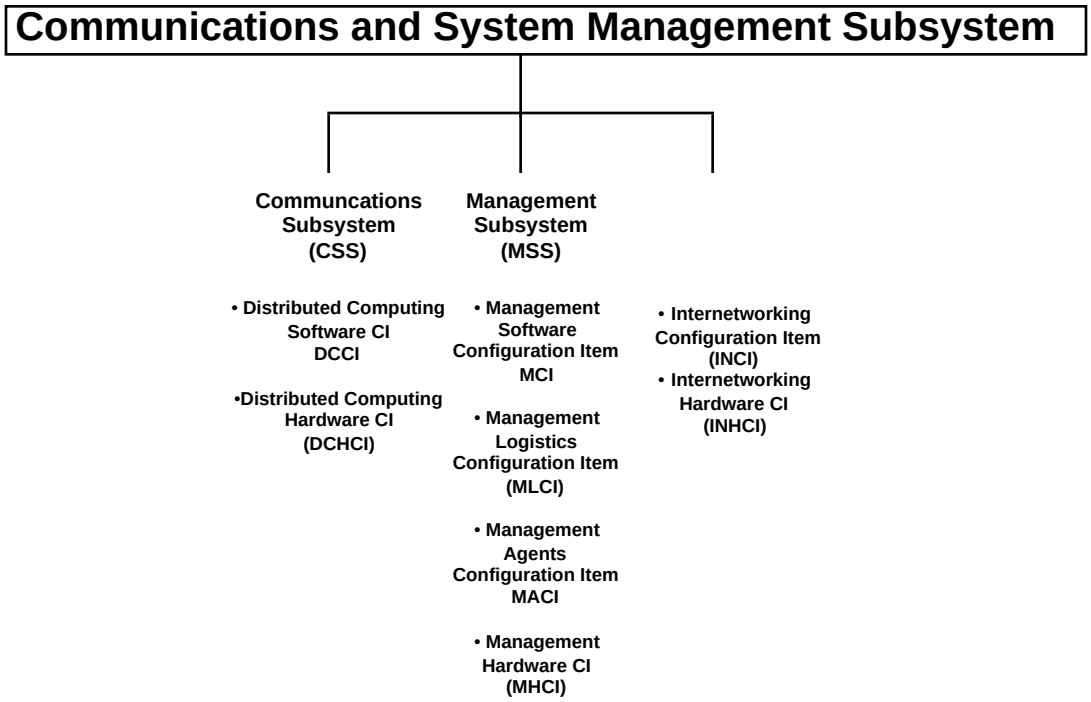

Figure 7-4. CSMS Subsystems and Components

Following a successful CSR, a subset of Release A software is formally installed at the EDC. The formal installation of Release A includes custom code and commercial-off-the-shelf (COTS) software and, as applicable, executables, load modules, test data sets, test tools, and documentation. The installation at the operational sites is performed by the I&T organization, supported by the CMO and the M&O organization. The system configuration needed to perform the acceptance test sequences is described in Table 7-2.

Table 7-2. EDC Release A System Configuration (To Be Determined)

Subsystem	HWCI/CSCI	Platform	Custom Executables	COTS

7.3.1 EDC Hardware Configuration

The EDC hardware configuration, (Figure 7-5) builds on the Ir1 supplied capacity and is designed explicitly to support early AI&T for ASTER and interface testing (e.g., Landsat-7). Given these requirements, only a subset of the subsystems have supplied components at the site: Data Processing (for AI&T science processing capacity), Ingest (for major interface testing), Management (MSS, for local site management) and minimal communications support (ISS). Essentially, most of the configuration supplied at Ir1 remains intact without modification, except for the additional components added to the Ingest hardware. Following is a synopsis of the hardware subsystems for the Release A EDC.

Client Subsystem: There is no dedicated hardware support (HWCI) for the Client Subsystem. The Client software configurations are supported by: (1) non-ECS provided hardware platforms, in the case of Client software utilized by the user community, or (2) ECS provided workstations utilizing Client software in support of operations users (network management, DAAC operations, AI&T etc.).

Data Server Subsystem: Within the Release A time frame, there is no hardware support for this subsystem since there are no ECS archive operations within this time frame, only AI&T and interface testing support.

Data Management Subsystem: Within the Release A time frame, there is no hardware support for this subsystem since there are no ECS Data Management operations within this time frame, only AI&T and interface testing support.

Ingest Subsystem: Ingest subsystem hardware at EDC is responsible for support of early interface testing of the Landsat Processing System (LPS) interface in preparation for the Landsat-7 mission.

Interoperability Subsystem: Within the Release A time frame, there is no hardware support for this subsystem since there are no ECS operations within this time frame, only AI&T and interface testing support.

Production Planning Subsystem: Within the Release A time frame, there is no hardware support for this subsystem since there are no ECS production operations within this time frame, only AI&T and interface testing support.

Data Processing Subsystem: DPS is responsible for managing, queuing, and executing processes on a specified set of processing resources at each DAAC site, and operates in conjunction with the Planning Subsystem.The Data Processing Subsystem (DPS) consists of three hardware CIs:

(1) *Science Processing*—the primary HWCI in the Processing Subsystem and contains staging (working storage), input/output (I/O), and processing resources necessary to perform routine processing, subsequent reprocessing, and Algorithm Integration & Test (AI&T). SPRHW HWCI consists of two components: Science Processing which provides a pool of cluster configured processing resources, and Processing Queue Management which provides the workstation(s)

required to manage, control and status tasked dispatched to the processing resources. Since there are no true production operations at EDC during the Release A time frame, this HWCI provides only the science processing capacity to host science software in early AI&T. The queuing component, which is normally the secondary (backup) server for the Planning Server (PLNHW HWCI), is not supplied at Release A. See the AITHW HWCI for more details.

(2) *Quality Assessment and Monitoring (AQAHW)*—This HWCI contains the hardware necessary to support DAAC operations users performing planned routine QA of product data. At a minimum, the hardware can be configured for general user and subscription use (client support). This HWCI may, over time, consist of QA monitors and workstations ranging from X-terminals, to small user workstations, to medium or large graphics workstations. The complement is site dependent and is a function of the classes of production performed. The need for visualization support will be explored as product specific QA processes and requirements are worked jointly with the DAAC operations personnel as well as the science teams. Since there are no true production operations at EDC during the Release A time frame, this HWCI is not provided as part of the Data Processing capability.

(3) *Algorithm Integration and Testing (AITHW)*—This HWCI provides the hardware resources to support DAAC operations users performing: science software algorithm integration and test , systems validation and integration and test. This HWCI provides the workstation and server based operations support hardware, while the prime science software integration and test capacity is provided within the SPRHW HWCI (i.e., no science processors are provided by the AITHW CI to the DAAC configuration). The AITHW HWCI provides the operations support workstations to allow DAAC personnel to configure, control and manage the AI&T processes engaged on the target science processes. AITHW also has provision for a small dedicated DBMS server to support AI&T, which does not interfere with the operational environment

Communications and Management Subsystems (CSS / MSS): At EDC, no additional hardware will be added to support Release A. A Sun 20/50 workstation will be provided for Ir1 use of Clearcase. ECS hosts at EDC will contain DCE client software, but since EDC is not operational at Release A, it will use the DCE directory and security servers at the SMC. This is not expected to be a performance issue, since the DCE client cache is large enough so that server references will occur primarily at system start-up.

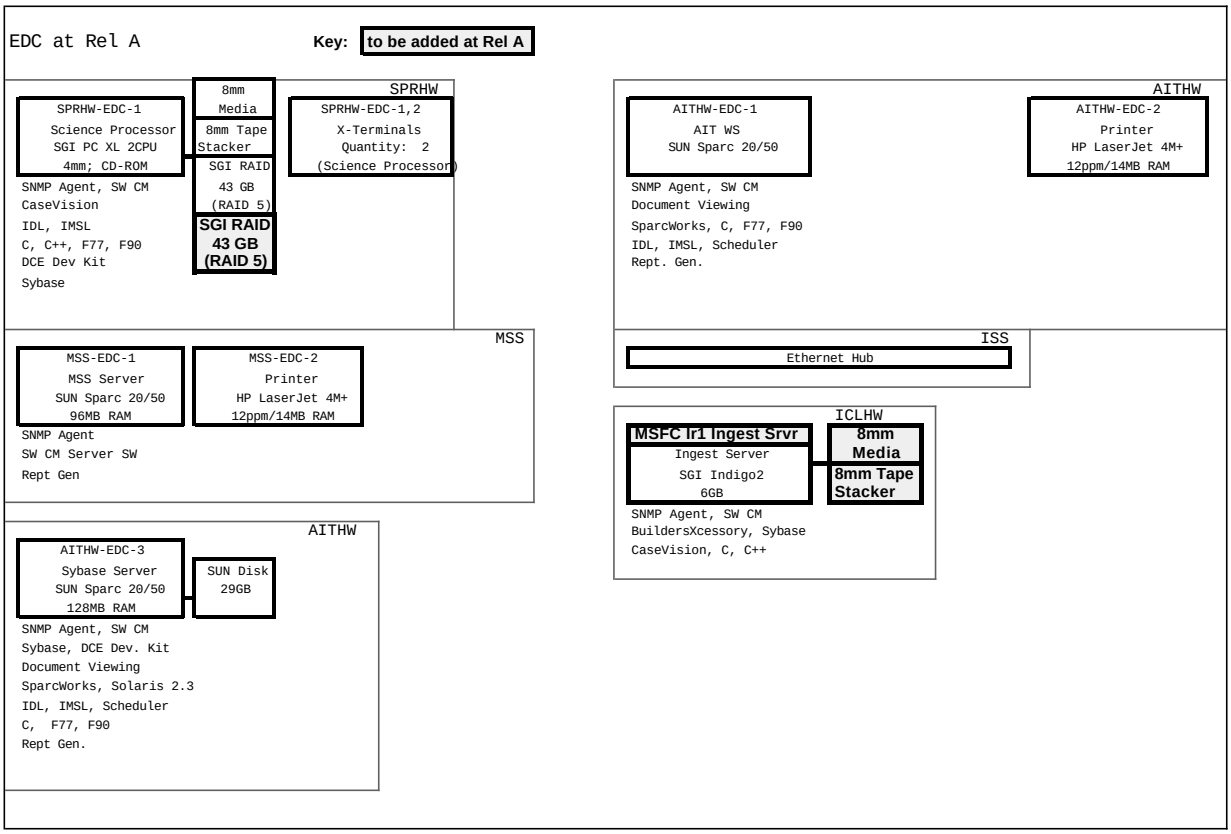

Figure 7-5. EDC DAAC Hardware Configuration Overview Diagram

7.3.2 EDC DAAC LAN Configuration

The EDC DAAC LAN topology is illustrated in Figure 7-6. The topology changed slightly at EDC for Release A to add an Ingest server, but the network architecture will remain essentially as it was during the Ir1 release. The topology consists of a single 10 Mbps Ethernet segment connected to an Ethernet hub, which connects to the current V0 network segment, to which the EBnet routers will also be connected.

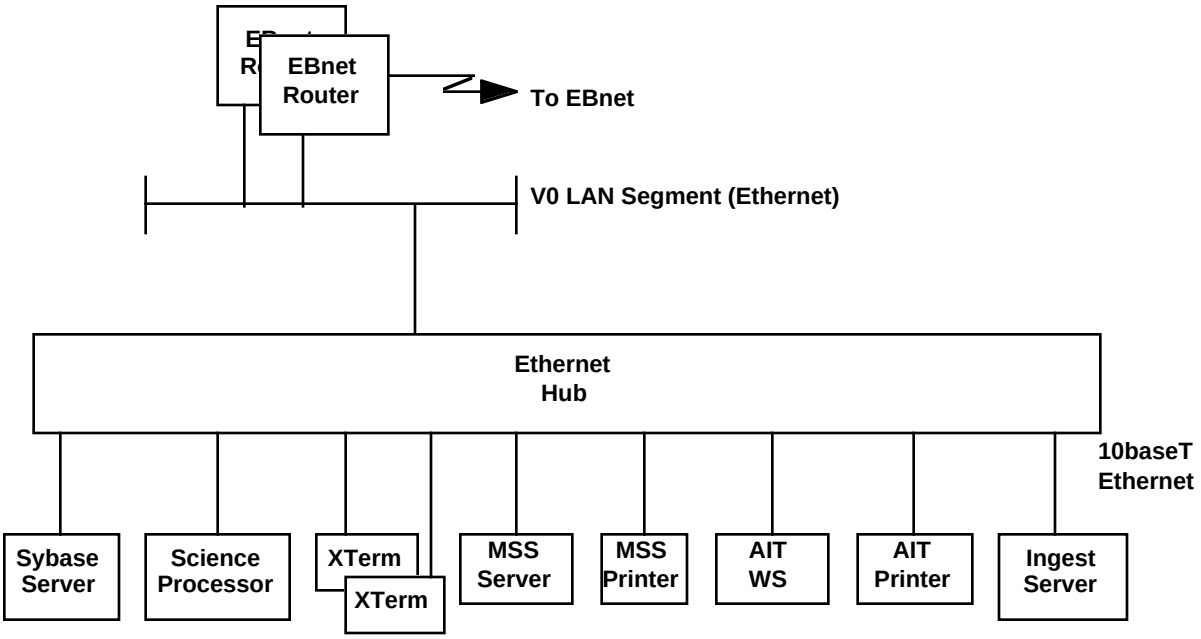

Figure 7-6. EDC DAAC LAN Topology

7.3.3 EDC Software Configuration

The EDC is composed of three ECS subsystem components, the Management Subsystem, the Communications Subsystem, and the Internetworking Subsystem. Below is a brief overview of the ECS software subsystems. A more comprehensive description can be found in the Release A System Monitoring and Coordination Center Design Specification for the ECS Project (DID 305).

- **Management Subsystem (MSS):** The Management Subsystem (MSS) provides enterprise management (network and system management) for all ECS resources including: commercial hardware (including computers, peripherals, and network routing devices), commercial software, and custom applications. Enterprise management reduces overall development and equipment costs, improves operational robustness, and promotes compatibility with evolving industry and government standards. Consistent with current industry trends, the MSS thus manages both ECS's network resources per EBnet requirements and ECS's host/application resources per SMC requirements. Additionally MSS also supports many requirements allocated to SDPS and FOS for management data collection and analysis/distribution.

  The MSS allocates services to both the system-wide and local levels. With few exceptions, the management services is fully decentralized, no single point of failure exists which would preclude user access. In principle every service is distributed unless there is an overriding reason for it to be centralized. MSS has two primary key specialization's: Enterprise Monitor and Coordination Services and Local System Management Services.

For IR-1 and Release A not all of the MSS services are fully implemented, some are provided through COTS and COTS customization, while others are provided through the use of Office Automation (OA) tools.

- **Communications Subsystem (CSS):** The CSS services include Object Services, Distributed Object Framework (DOF) and Common Facility Services. Support in this subsystem area is provided for peer-to-peer, advanced distributed, messaging, management, and event-handling communications facilities. These services typically appear on communicating end-systems across an internetwork and are not layered, but hierarchical in nature. Additionally, services to support communicating entities are provided, included directory, security, time, and other ancillary services. The services of the Communications Subsystem are functionally dependent on the services of the Internetworking Subsystem. The services of the common facility, object and DOF are the fundamental set of interfaces for all CSMS management and FOS and SDPS user access (i.e., pull) domain services. The DOF services are the fundamental set of dependencies of the common facility and object services.

- **Internetworking Subsystem (ISS):** The Internetworking Subsystem provides for the transparent transfer of data between end systems within local and wide area networks. The ESN LANs are responsible for transfer of data within the DAACs, SMC and EOC. ECS interfaces with external systems and DAAC to DAAC communications are provided by the EOSDIS Backbone Network (EBnet). EBnet's primary function is to transfer data between DAACs, including both product data and inter-DAAC queries and metadata responses. Other networks, such as NSI, provide wide-area services to ECS. In addition, "Campus" networks, which form the existing networking infrastructure at the ECS locations, provides connectivity to EOSDIS components such as SCFs and ISTs.

7.4 Acceptance Test Preparation

ATO holds an Acceptance Test kick-off briefing with EDC management personnel. The kick-off meeting discusses the following:

- EDC's readiness to conduct Acceptance Test
  - -- Results of hardware and software installation
  - -- External interface availability
- Required personnel
- Daily test execution schedules

7.4.1 EDC's Site Readiness to Conduct Acceptance Test

The results of the hardware and software installation, and any associated problems, are analyzed by EDC management and ATO during the kick-off meeting. In addition, EDC management verifies the status of the necessary external interfaces and the expected site layout. The external interfaces

needed for EDC Acceptance Tests are depicted in Figure 7.1. Figure 7-2 depicts the expected EDC site layout.

7.4.2 Required Personnel

During the kick-off meeting, EDC management personnel have an opportunity to review and verify that the needed EDC personnel are available to conduct the planned test events. Sections 8-12 lists the necessary EDC personnel needed for each test sequence. Acceptance testing is a formal process that requires the coordination of different organizations. Each organization has well-defined roles and responsibilities for the acceptance testing process. Below is a summary of these organizations and personnel.

Acceptance Test Organization (ATO): The ATO assigns a test manager to coordinate and run acceptance testing. The ATO also provides test conductors to execute the step-by-step procedures that are defined in the ATPr. Test conductors also write, collect, and track nonconformance reports and determine the impact of these reports on test plans, scenarios, test cases, and procedures.

Quality Office (QO): The QO provides a representative to witness the execution of acceptance testing. The QO also tracks the status of nonconformance reports and reviews them prior to closure to ensure that the required actions have been completed.

Configuration and Data Management Organization: The Configuration Management Office (CMO) coordinates with the ATO to capture the test configuration of software, hardware, test data, test tools, and documentation prior to test execution to ensure repeatability. They also capture and retain test outputs (e.g., test logs, data, and modified procedures) and distribute copies for test analysis. The product baseline, which is established prior to the RRR and includes test reports, is maintained by the CMO.

ECS Maintenance & Operations (M&O) Organization: As part of acceptance testing at the test site, the site manager assigns M&O personnel who are integrated into the test team to help execute acceptance tests. The early first-hand involvement of the site manager and his operations personnel in site acceptance testing provides the M&O Team with early visibility into each new release and hastens a smooth transition. This involvement and familiarity with ECS software in the stages before release to the user base greatly enhance the effectiveness and productivity of the M&O staff and positions a highly competent and responsive user support staff on-site at the EDC. In addition, during the M&O phase, the ATO assists by providing benchmark tests to verify operational performance of the ECS system. The ATO provides guidance in acceptance testing during the verification of approved changes and enhancements.

ESDIS SI&T Contractor: The ESDIS Integration Contractor and the Independent Verification and Validation (IV&V) Contractor witness and monitors acceptance testing, as directed by the ESDIS SI&T, and the IV&V Contractor.

7.5 Acceptance Test Sequences

The acceptance testing of Release A capabilities is divided into five major scenario groups: System Management, Push, Pull, flight operations, and End-to-End. These scenario groups identify hi-level ECS functionality from a users and operations viewpoint. Each group is further sub-divided into scenarios that emulate the operations and user environment. Scenarios are further broken down into more manageable test sequences in which test cases that trace to Level-3 requirements are executed. Sections 8 through 12 describe the nature of each scenario, the test sequences within them, and their individual test cases. Table 7-3 depicts the planned test sequences at all sites, including EDC.

Table 7-3. Planned Sequence of Test Activities (1 of 5)

Sequence	Test Case	GSFC	LaRC	EDC	SMC	EOC
8.1.1 M&O Procedures Review and Confidence	8.1.1.1 ECS Sites Nominal Operations Policy and Procedures Review	X	X	X	X	X
	8.1.1.2 ECS Hardware and Software Configuration Items Review	X	X	X	X	X
8.1.2 Start-up	8.1.2.1 Site Startup Confidence Test	X	X	X	X	X
	8.1.2.2 Site Restart Including Introduction of Previous Results	X	X	X	X	X
8.1.3 Site Operations	8.1.3.1 SMC Monitoring and Control of Managed Resources				X	
8.1.4 Site Shutdown/Recovery	8.1.4.1 Emergency and Other Abnormal Shutdown	X	X	X	X	X
	8.1.4.2 Recovery from Catastrophic Emergency Shutdown	X	X	X	X	X
	8.1.4.3 Recovery from Abnormal Non-Catastrophic Shutdown	X	X	X	X	X
8.1.5 Site Maintenance	8.1.5.1 DAAC M&O Interfaces	X	X	X		
	8.1.5.2 Maintenance of ECS Databases	X	X	X		
8.1.6 Site Data/Metadata/ Information Management	8.1.6.1 File Management	X	X	X		
	8.1.6.2 ECS Storage/Archive/Backup Capability	X	X	X	X	
8.1.7 Facilities Interface	8.1.7.1 SMC External Interfaces				X	
	8.1.7.2 EOC External Interfaces					X
	8.1.7.3 GSFC DAAC External Interfaces	X				
	8.1.7.4 LaRC DAAC External Interfaces		X			
	8.1.7.5 EDC DAAC External Interfaces			X		
	8.1.7.6 ECS Internal Interfaces	X	X	X	X	X
8.2.1 Schedule Generation	8.2.1.1 DAAC Schedule Generation	X	X			
	8.2.1.2 SMC Schedule Generation				X	
8.2.2 Schedule Adjudication	8.2.2.1 Adjudication of ECS Site Conflicts	X	X			
	8.2.2.2 Adjudicate Contention for Resources Between ECS Sites				X	
8.3.1 Enhancements	8.3.1.1 ECS Enhancements	X	X	X	X	X
8.4.1 Resource Management	8.4.1.1 Resource Management Directive	X	X	X	X	X
	8.4.1.2 Sufficient Storage	X	X			
8.4.2 Maintenance Management	8.4.2.1 On-site Preventive Maintenance				X	
	8.4.2.2 On-site Corrective Maintenance				X	
8.4.3 Logistics Management	8.4.3.1 Logistics Monitoring	X	X	X	X	X
	8.4.3.2 Logistics Replenishment	X	X	X	X	X
8.4.4 Training Management	8.4.4.1 ECS Training and Certification Program Management	X	X	X	X	
	8.4.4.2 On-the-Job Training				X	
8.4.5 Inventory Management	8.4.5.1 Inventory and Configuration Management	X	X	X	X	
	8.4.5.2 LSM Enhancement Evaluation & Implementation Management				X	
	8.4.5.3 SMC Enhancement Evaluation & Implementation Management				X	
8.4.6 Quality Management	8.4.6.1 SMC Quality Assurance				X	
	8.4.6.2 LSM Quality Assurance	X	X	X		X

Table 7-3. Planned Sequence of Test Activities (2 of 5)

Sequence	Test Case	GSFC	LaRC	EDC	SMC	EOC
8.4.7 Policies and Procedures Management	8.4.7.1 Policies and Procedures Control	X	X	X	X	X
	8.4.7.2 Policies and Procedures Maintenance	X	X	X		X
8.4.8 Network Management	8.4.8.1 Network Configuration and Status	X	X	X		X
	8.4.8.2 Directory Service	X	X	X		X
8.5.1 Metrics	8.5.1.1 Performance Metrics Establishment	X	X	X	X	
	8.5.1.2 Performance Measurement and Degradation Response Capability	X	X	X	X	
	8.5.1.3 RMA Assurance Test and Analysis	X	X	X	X	X
8.5.2 Performance, Monitoring, Analysis, and Testing	8.5.2.1 Performance Testing	X	X	X	X	
	8.5.2.2 Performance Monitoring and Analysis	X	X	X	X	X
8.6.1 Fault Management	8.6.1.1 DADS Fault Analysis and Diagnostic Testing	X	X	X		
	8.6.1.2 Product Generation Fault Analysis and Diagnostic Testing	X				
	8.6.1.3 Communications Fault Analysis and Diagnostics Testing	X	X	X	X	X
	8.6.1.4 Push Error	X				
8.6.2 Security Management	8.6.2.1 SMC Security Functions				X	
	8.6.2.2 LSM Security Functions	X	X	X		X
8.6.3 Accounting and Accountability	8.6.3.1 Accountability: Data Tracking and Audit Trails				X	
	8.6.3.2 Accountability: LSM Data Tracking	X	X	X		X
8.6.4 Report Generation	8.6.4.1 SMC Report Generation				X	
	8.6.4.2 LSM Report Generation	X	X	X		X
9.1.1 Data Ingest, Processing, and Archive at ECS/LaRC from SDPF	9.1.1.1 CERES Data Receipt from SDPF to ECS/LaRC Test Procedure		X			
	9.1.1.2 CERES Data Validation/Formatting at ECS/LaRC Test Procedure		X			
	9.1.1.3 CERES Metadata and Level-1 through 4 Data Processing at ECS/LaRC Test Procedure		X			
	9.1.1.4 Archive CERES Data Products at ECS/LaRC Test Procedure		X			
	9.1.1.5 CERES Data Receipt from SDPF to ECS/LaRC (Fault) Test Procedure		X			
	9.1.1.6 CERES Data Validation/Formatting at ECS/LaRC (Fault) Test Procedure		X			
	9.1.1.7 CERES Metadata and Level-1 through 4 Data Processing at ECS/LaRC (Fault) Test Procedure		X			
	9.1.1.8 Archive CERES Data Products at ECS/LaRC (Fault) Test Procedure		X			
	9.1.1.9 Ingest, Validate, and Archive CERES Documentation from SDPF Test Procedure		X			
9.1.2 Data Ingest, Processing, and Archive at ECS/MSFC from SDPF						
9.1.3 Early AM-1 Interface Test Support	9.1.3.1 AM-1 Data Ingest from EDOS at ECS/LaRC Test Procedure		X			
	9.1.3.2 AM-1 Data Ingest from EDOS at ECS/GSFC Test Procedure	X				
	9.1.3.3 AM-1 Data Ingest from EDOS at EDC Test Procedure			X		

Table 7-3. Planned Sequence of Test Activities (3 of 5)

Sequence	Test Case	GSFC	LaRC	EDC	SMC	EOC
9.1.4 Early FDF and AM-1 Interface Test Support	9.1.4.1 Orbit/Attitude Data Ingest from FDF	X				
9.2.1 Higher Level Processed Data Receipt from the V0 DAAC	9.2.1.1 Ingest, Validate, and Archive Migration Version 0 Data from the V0 DAAC	X	X	X		
	9.2.1.2 Ingest, Validate, and Archive TOMS Ozone Ancillary Data from the V0 DAAC	X				
	9.2.1.3 Ingest, Validate, and Archive Migration Version 0 Documentation from the V0 DAAC	X	X	X		
	9.2.1.4 Ingest, Validate, and Archive SAGE II Ancillary Data from the V0 DAAC		X			
9.2.2 Higher Level Processed Data Receipt from the TSDIS to the MSFC DAAC						
9.2.3 Higher Level Processed Data Receipt from the TSDIS to the GSFC DAAC	9.2.3.1 Ingest, Validate, Process, and Archive VIRS Data from TSDIS	X				
	9.2.3.2 Ingest, Validate, and Archive VIRS, PR, TMI, and GV Documentation from TSDIS	X				
	9.2.3.3 Ingest, Validate, and Archive VIRS, PR, TMI, and GV Data from TSDIS (Fault)	X				
9.2.4 Higher Level Processed Data Receipt from EPDS (Landsat-7)	9.2.4.1 Science Planning Information			X		
	9.2.4.2 Ingest Data/Metadata from Landsat-7			X		
9.2.5 Higher Level Processed Data Receipt from the NOAA ADC to the LaRC DAAC	9.2.5.1 Ingest, Validate, and Archive NOAA ADC Ancillary Data at the LaRC DAAC		X			
9.2.6 Higher Level Processed Data Receipt from the NOAA ADC to the GSFC DAAC	9.2.6.1 Ingest, Validate, and Archive NOAA ADC Ancillary Data	X				
9.3.1 Reprocessing Request Receipt/Processing from the SCF (LaRC)	9.3.1.1 SCF Reprocessing Requests Receipt/Validation at the LaRC DAAC Test Procedure		X			
	9.3.1.2 SCF Reprocessing Plan Generation/Dispatching at the LaRC DAAC Test Procedure		X			
	9.3.1.3 CERES Standard and Browse Data Products Reprocessing at the LaRC DAAC Test Procedure		X			
	9.3.1.4 CERES Standard and Browse Data Products QA Assessment Metadata Receipt/Processing at the LaRC DAAC Test Procedure		X			
	9.3.1.5 Reprocessed CERES Data Directories/Inventories Update and Notification Test Procedure		X			
9.3.2 Reprocessing Request Receipt/Processing from the SCF (MSFC)						
9.4.1 Archived TRMM Data Delivery	9.4.1.1 TSDIS Data Requests Receipt/Validation at the MSFC DAAC					
	9.4.1.2 Deliver Archived TRMM Data to the TSDIS from the MSFC DAAC					
	9.4.1.3 GSFC DAAC Data Requests Receipt, Validation, and Deliver Archived TRMM Data to the TSDIS	X				
	9.4.1.4 Deliver Archived TRMM Data to the TSDIS from the GSFC DAAC	X				
9.4.2 Reprocessed Data Receipt from the TSDIS (MSFC)						

Table 7-3. Planned Sequence of Test Activities (4 of 5)

Sequence	Test Case	GSFC	LaRC	EDC	SMC	EOC
9.4.3 Reprocessed Data Receipt from the TSDIS (GSFC)	9.4.3.1 Reprocessed Data Receipt at the GSFC DAAC from TSDIS	X				
9.5.3 Maintain Processing Plan and Schedules	9.5.3.2 Maintain SMC Processing Plans and Schedules	X	X	X		
10.1.1 ECS Desktop User	10.1.1.1 System Access via Network Link	X	X			
	10.1.1.2 System Access via Direct Connection	X	X			
	10.1.1.3 User Registration	X	X			
	10.1.1.4 User Profile	X	X			
	10.1.1.5 Data Access Privileges (DELETED)	X	X			
	10.1.1.6 Directory Search	X	X			
	10.1.1.7 Guide Search	X	X			
	10.1.1.8 Inventory Search	X	X			
	10.1.1.9 Browse	X	X			
	10.1.1.10 Information Search	X	X			
	10.1.1.11 Product Order	X	X			
	10.1.1.12 Distribution Medium	X	X			
	10.1.1.13 Application Programming Interfaces (MOVED)					
	10.1.1.14 Data Product History (DELETED)					
	10.1.1.15 User Statistics Report Generation	X	X			
10.1.2 ECS/Version 0 (V0) System Interoperability	10.1.2.1 ECS User Access to Version 0	X	X	X		
	10.1.2.2 Search ECS & V0 from the ECS Desktop	X	X			
	10.1.2.3 Version 0 User Access to ECS	X	X			
	10.1.2.4 Search ECS & V0 from the V0 Client	X	X			
10.1.3 EOSDIS Core System (ECS)/Affiliated Data Center (ADC) Interoperability	10.1.3.1 ECS User Access to NOAA ADC	X	X			
	10.1.3.2 ECS User Access Request NOAA ADC Product	X	X			
	10.1.3.3 Product Status Request	X	X			
	10.1.3.4 ECS User Search	X	X			
	10.1.3.5 ECS User Access & Search of MSFC SCF Products	X				
10.2.1 GSFC SCF/ECS	10.2.1.1 Algorithm Integration and Test at the GSFC DAAC	X				
	10.2.1.2 Product QA at the GSFC DAAC	X				
	10.2.1.3 Search, Browse, Request, and Receive Data at the GSFC DAAC	X				
	10.2.1.4 Data Management Services at the GSFC DAAC	X				
	10.2.1.5 Toolkit Testing at the GSFC DAAC	X				
10.2.2 LaRC SCF/ECS	10.2.2.1 Algorithm Integration and Test at the LaRC DAAC		X			
	10.2.2.2 Product QA at the LaRC DAAC		X			
	10.2.2.3 Search, Browse, Request, and Receive Data at the LaRC DAAC		X			
	10.2.2.4 Data Management Services at the LaRC DAAC		X			
	10.2.2.5 Toolkit Testing at the LaRC DAAC		X			

Table 7-3. Planned Sequence of Test Activities (5 of 5)

Sequence	Test Case	GSFC	LaRC	EDC	SMC	EOC
11.1.1 EOC Tests						
12.1.1 Inter-Site Message	12.1.1.1 Inter-DAAC and DAAC-SMC Communications	X	X	X	X	X
12.1.2 Multi-Site System Management	12.1.2.1 Schedule Generation, Coordination and Adjudication Support	X	X		X	
	12.1.2.2 TRMM and AM- 1 Resource Scheduling Support	X	X		X	
	12.1.2.3 SMC Support to Integration Test & Simulation Activities				X	
12.2.1 SDPF Data Handling and Processing	12.2.1.1 Retrieve CERES Data from SDPF, Process and Archive Standard CERES' Products at LaRC DAAC		X			
12.2.2 TSDIS Data Handling	12.2.2.1 VIRS, PR, TMI, and GV Data Ingest and Store	X				
12.2.3 TRMM Data Product Distribution	12.2.3.1 TRMM Data Product Distribution	X	X			
12.2.4 Data Accounting	12.2.4.1 Data Product/Data Receipt Accounting	X	X			
12.4.1 Science Data Search and Retrieval	12.4.1.1 Multi-Site Data Search and Access	X	X			
	12.4.1.2 Data Receipt and Data Storage	X	X			
	12.4.1.3 Science Ancillary Data Access	X	X			
12.4.2 Science Data Product Production	12.4.2.1 Science Algorithm Retrieval and Compatibility	X	X			
12.4.3 Science Metadata Production and Storage	12.4.3.1 Metadata Production and Updating	X	X			
	12.4.3.2 Metadata Storage and Retrieval	X	X			
12.4.4 ECS Data Set Interoperability	12.4.4.1 ECS DAAC and V0 DAAC Interoperability	X	X	X		
	12.4.4.2 NOAA Data Centers/ECS DAAC Interoperability	X	X			
12.5.1 Data Ingest, Data Server and Data Distribution Performance	12.5.1.1 High Data Rate Ingest, Archiving and Retrieval	X	X			
	12.5.1.2 Ingest and Archiving of Triple the Average Data Rates	X	X			
	12.5.1.3 GSFC DAAC Data Reprocessing Support and Archiving	X				
	12.5.1.4 LaRC DAAC Data Reprocessing Support and Archiving		X			
12.5.2 System Response Time Performance	12.5.2.1 Client Server Response Time Performance	X	X			
	12.5.2.2 Data Access Retrieval and Transmission Performance	X	X			
12.5.3 ECS Sizing, Evolution, and Growth	12.5.3.1 Accommodation of ECS Expansion Analysis	X	X	X		
	12.5.3.2 ECS Growth and Evolution Adequacy Analyses	X	X	X	X	X
12.5.4 ECS Testability and Overall Capabilities	12.5.4.1 Test Support in an Operational DAAC	X	X			

7.5.1 EDC Test Procedure Roadmap

This section provides a listing of tables from the Appendices to this document, that cross reference test sequences or procedures to each of the following:

External Interfaces (Appendix A) - The left column of this table lists each interface external to the Release A ECS EDC. In the right column is a list of test sequences which contains tests involving that external interface.

Operational Scenarios (Appendix B) - This table lists each of the operations scenarios from the Operations Scenarios for the ECS Project: Release A (DID 605) in the left column, and in the right column a list of test sequences which contains tests which use that scenario as part of the procedure(s) in that sequence.

EDC H/W (Appendix C) - This table lists each piece of hardware at the Release A ECS EDC in the left column, and in the right column a list of test procedures which use that hardware as part of the procedure(s).

M&O Procedures (DID 611) (Appendix D) - This table lists each of the maintenance procedures from the Maintenance and Operations Procedures (DID 611) in the left column, and in the right column a list of test procedures which use that procedure.

7.6 Test Conduct

Test conduct is the execution of the approved test procedures in the officially approved and controlled test configuration. ATO test conduct takes place at the EDC on a fully approved and configured release baseline as approved at the CSR.

7.6.1 Test Direction

All formal tests are conducted under the direction of the Test Conductor who has direct authority regarding all aspects of the execution of that test. This authority includes the assignment of priority to NCRs, NCR disposition, and the NCR's impact on ongoing testing. The step-by-step details of non-conformance reporting and software configuration management is described in the Software Nonconformance Reporting and Corrective Action System Process Project Instruction (SD-1-014) and the Software Development Handbook Project Instruction (CM-1-025).

Authority is vested in the Test Conductor by the Project or Release Manager, but may be further delegated at specific times (off-shift) and/or sites or during his absence. Where activities involve more than one site, this delegation of authority is key. The local test conductor needs autonomy, but also needs centralized guidance. For further information concerning duties of other test participants, see the Verification Plan (DID 401/VE1).

7.6.2 Test Schedule Management

The Test Conductor is responsible for the scheduling and dispatch of test resources and activities. In consultation with concerned parties, he/she determines what portion of the test is executed on a given day. During this process all pertinent factors are examined: availability of system resources, conflicts with other activities and inherent test sequencing concerns. During the planning and preparation phases the overall verification activity was divided into scenarios and sequences to provide flexibility in scheduling. The sequences comprising a scenario provide a manageable increment of the test with clear starting and stopping points. The test procedure is the most basic

increment of execution. It is crucial that the Test Conductor be cognizant of dependencies within the test structure (e.g., does the current procedure require that another procedure has run successfully to establish initial data conditions?). These are documented in the test procedure itself, but the Test Conductor must have broader understanding and control of the test environment at all times to deal effectively with test scheduling issues.

When a given test procedure is scheduled for execution, the Test Conductor ensures that all necessary materials and supporting data are present. Included and key to this activity are copies of the applicable procedures, either hard copy or access to on-line soft copy. Specially labeled copies of the procedures are distributed to each participant actually performing the test. Observers receive copies so they may follow the execution. The copies of the test procedures held by those performing the test and the Test Conductor's copy is collected and becomes part of the official record of the test. As such, on the day of the test they are marked, by hand, to indicate date, time, operator position (or role) and who is using the procedure.

Before the beginning of a scheduled test period a pre-test meeting is held by the Test Conductor. The Test Conductor determines the need for both regularly scheduled and Ad Hoc meetings. The purpose of the pre-test meetings is to:

a. Brief the activities to be performed

b. Assess readiness to proceed with those activities

c. Discuss any special conditions for the conduct of the activity

d. Apply any last minute markups to the test procedures to be used. If there are any, they are made, initialed and dated.

All changes to test procedures, either during planning, execution or post test analysis, are approved and initialed by the Test Conductor. Changes to test procedures are either temporary or permanent. Temporary changes are those that are made to accommodate a singular event or circumstance. Temporary changes generally apply to only one execution of the test procedure and are made to document the deviation for reporting purposes. For temporary changes the procedures are marked up in blue or black ink. Permanent procedure changes are made to correct errors in the procedures or insert new steps which are executed every time the test is re-run. Permanent changes are marked up in red ink and are reflected in the next document release which contains that particular test procedure.

7.6.3 Test Execution

The test begins under the control of the Test Conductor or a designated authority. Team participants follow, exactly, the instructions written in the procedures. In some cases these procedures have an inherent timeline that is critical to the success of the activity. In these cases the procedures have, for each step or group of steps, a time tag telling when they should be performed. The Test Conductor coordinates the pacing of these steps by providing synchronized time sources to all participants. In other cases, the procedures have self-contained pacing instructions. These may instruct the test participant to wait until directed to proceed with a given activity.

The test procedures specify what data is to be collected as the test is executed. This may include spaces where data is to be entered into the procedure itself to capture results or to record the time it took to perform a given activity. All entries requested must be entered in blue or black ink.

7.6.4 Unscheduled Events During Test Execution

Problems encountered which interrupt or prevent the execution of the test procedures might include the following:

a. Failure of the system to perform as specified in the procedure.

b. Inability to perform the next step due to, for instance, missing data. An example is: "Select an ASTER image dated 9/11/98".

c. Critical software failure.

d. Hardware, communications, or special test equipment failure.

e. An error in following the procedure. Steps might be inadvertently skipped. This may be noticed by the operator or might cause a more overt problem already listed above.

f. Unexpected actions by others that affect the test environment.

It is the responsibility of the test participants to determine if problems have occurred. If there is doubt, they immediately address their concerns to the Test Conductor. The Test Conductor is, likewise, responsible to carefully follow the conduct of the test constantly, looking for deviations or anomalies. Actions to be taken in response to unscheduled events are detailed in the Procedure for Control of Unscheduled Activities During Verification for the ECS Project (DID 404/VE1).

7.6.5 Test Conduct Documentation

As the test proceeds, significant events are recorded in test logs. Each test team participant keeps a log. The Test Conductor keeps a master test log which include the information recorded in the individual logs.

Upon completion of a session of testing, the Test Conductor directs the securing of all necessary information. Material to be collected/controlled includes:

a. All test procedures (including markups)

b. Test Logs (including individual logs and notes and the master test log)

c. Materials produced by the system under test (e.g. printouts, screen dumps)

d. Post test file dumps. This may involve collection of actual media to perform the saves. If instead, the dumps are recorded on disk, they should be placed under CM control by saving them within the ClearCase tool. In this case, a record of the data set names and version must be maintained.

e. NCRs written during the testing period. Note: Some problems encountered are obvious NCRs and can be written immediately. Other problems are discussed at the post test

review meeting described below. ECS policy is to write NCRs freely and dispose of duplicates or erroneous submissions after review.

7.6.6 Daily Test Reviews

At the completion of each day of testing, a post test review meeting is held to review the events of the day. If testing involves simultaneous activities at multiple sites, as in the end-to-end scenarios, this post test review meeting is held as a teleconference. During this meeting, overall testing status is assessed. Problems encountered during the day are reviewed. This is accomplished by reviewing all test procedures and test logs. Each problem is discussed and assessed. A determination of the need to create a Nonconformance Report is made. If an NCR is opened, a team member is assigned to enter it in the NRCA system. The status and priority of the problem is determined, if possible. Any necessary follow-up investigation is assigned, including imposition of a due date. A daily log of statistics is kept citing the number of test cases executed, number of Nonconformance Reports filed, their classification and other test metrics for status reporting purposes. Specific metrics relating to test execution are developed, reviewed, and approved prior to the start of test conduct activities.

Finally, a determination of success for the day's activities is made and discussed. This guides the planning for the next session's activities. Based on this assessment, any changes in the scheduled activities for the next day is evaluated and the test schedules and procedures updated appropriately. Generally, complete success in meeting the objectives for a day's testing results in the uninterrupted continuation of the planned test activities. Unexpected interruptions to testing results in the rescheduling of test activities and resources to minimize the impact to the testing effort.

7.7 Acceptance Test Schedule

Figure 7-7 depicts the acceptance test schedule for the ECS Release A. During the conduct of acceptance testing, ATO conducts a daily acceptance test status meeting to apprise EDC management personnel of on-going acceptance test schedules and status.

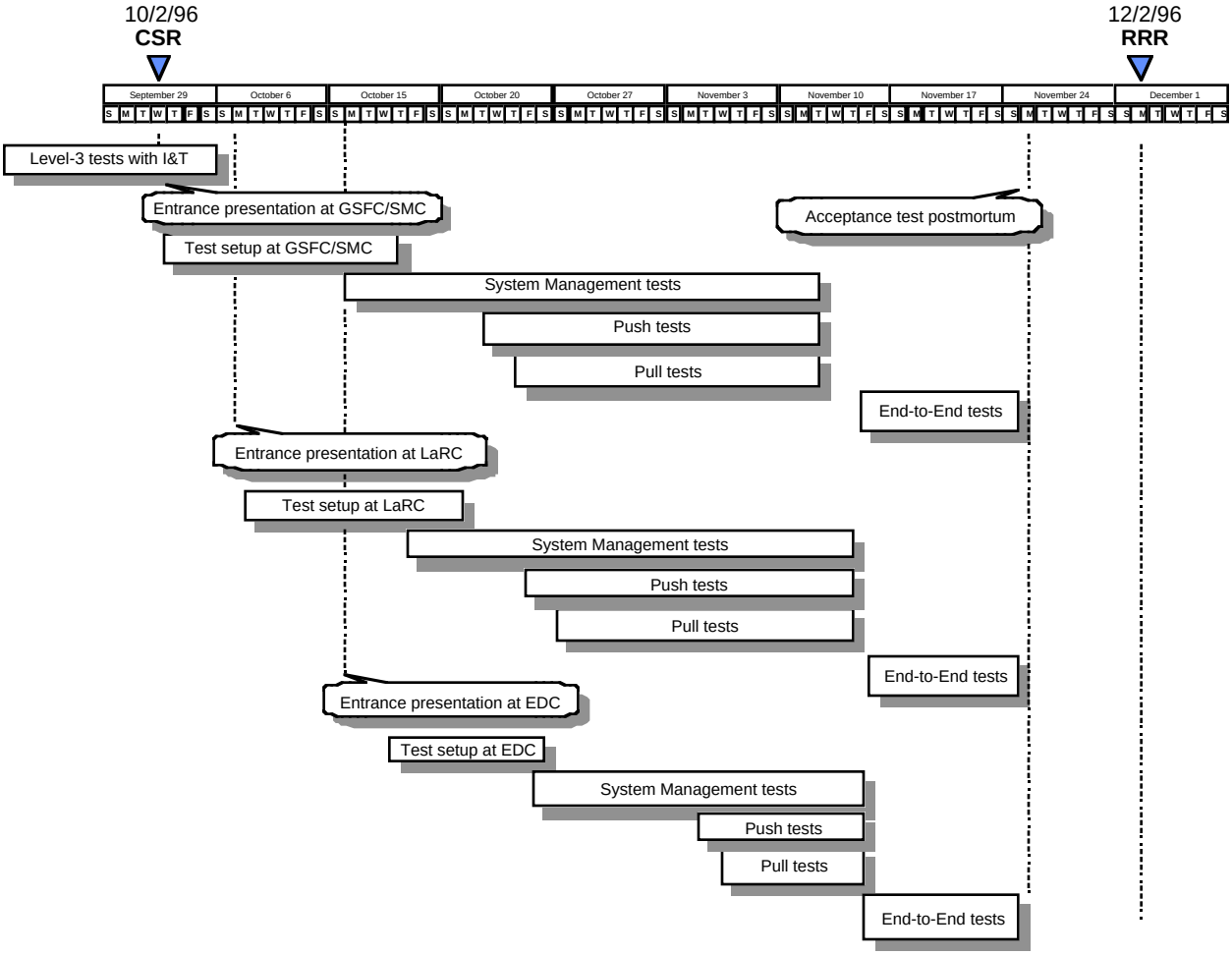

FIGURE 7-7. ACCEPTANCE TEST SCHEDULE

7.8 Release Readiness Review (RRR)

Before ECS Release A is formally approved for use, a RRR is held to validate the utility and suitability of the release. This review focuses on the degree to which requirements for Release A have been satisfied. The current status of interfacing elements and the user support infrastructure within the ECS is reviewed to ensure that Release A actually improves overall system operation. In addition to a summary of new capabilities and changes since the Ir1 release, the data products scheduled in the ECS CDRL for delivery prior to the RRR, shown in Figure 7-8, are available for review.

The results of the Physical Configuration Audits (PCAs), conducted at each applicable operational site, are presented at RRR. Witnessed by the Quality Office and ESDIS, the PCAs are conducted by the ECS Project Team and led by the CMO. The results of the Functional Configuration Audits (FCAs), accomplished by review of Acceptance Test results, are presented at RRR. The FCA's are performed by the Quality Office and ESDIS. Both PCA and FCA results are documented and delivered in CDRL 081, Audit Report (DID 506/PA3).

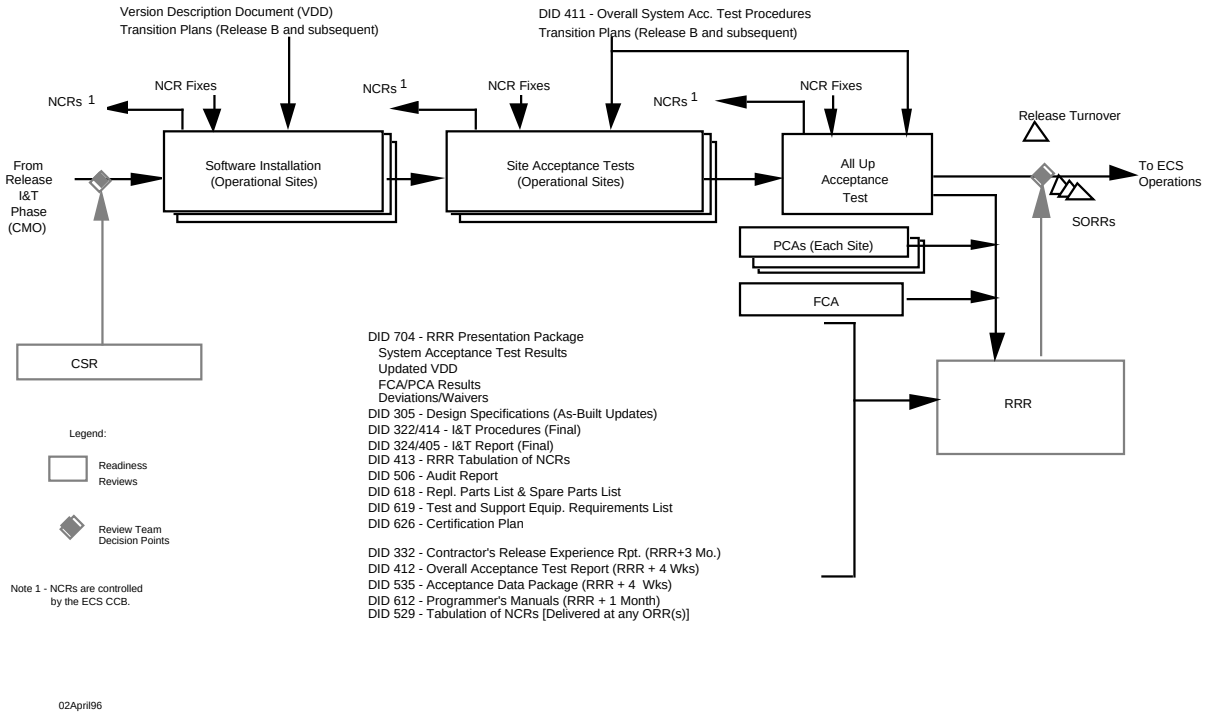

Figure 7-8. Release Readiness Review Material

8. System Management Scenario Group

The objective of the System Management Scenario Group for the EDC ECS DAAC is to demonstrate the ability of ECS system facilities and infrastructure to support early interface testing required for ECS Release A. The site is examined to provide assurance to the AT team of its readiness to support further acceptance testing, based on its performance under the scrutiny of the ECS Site Commission Scenario. The EDC ECS DAAC Interfaces with the SMC, which conducts enterprise monitoring and coordination of operations for ECS managed resources. The EDC ECS DAAC and SMC use these Interfaces to perform configuration management, security and accountability; and participate in system level problem resolution (trouble tickets). These functions use these Interfaces to provide the site management access to SMC management services and system wide data. The site-level configuration management and performance management capability is evaluated. Ancillary capabilities (fault management, security functionality, accounting and accountability, and report generation) are reviewed for functional completeness and for acceptable operation at the site, and in the total ECS system context.

8.1 ECS Site Commission Scenario

This scenario verifies the EDC ECS DAAC procedures and the operation and care of its equipment. The scenario includes an evaluation of EDC ECS DAAC documented procedures, a demonstration of power up procedures, various start-up and shutdown procedures, and recovery from an abnormal shutdown. It also demonstrates the types and availability of EDC ECS DAAC maintenance tools and the application of approved procedures for their use. Assessment of the EDC ECS DAAC facility interface capability includes evaluation of both external and internal interfaces.

Through a demonstration of simulated events and a policy and procedures review, confidence is built in each site's ability to successfully respond to scheduled and unscheduled events. As a final step, the AT team estimates the site's readiness to support further acceptance testing, based on the site's performance during this condensed, comprehensive overview of the systems operation.

8.1.1 M&O Procedures Review and Confidence Test Sequence

This sequence confirms the existence and completeness of documented M&O policies and procedures and confirms the correct hardware and software configuration items of the ECS site.

Configuration: The subsystem needed to perform this sequence of tests are as follows. CSS/MSS, INS & ISS.

External Interfaces: There are no external interfaces needed for this sequence.

Operator Position(s): The operator position from the ECS Maintenance and Operations Position Descriptions document (607/OP2) needed to support this sequence is listed:

DAAC Computer Operator

Operational Scenario: There are no operations scenarios, taken from the Operations Scenarios for the ECS Project: Release-A document (605/OP1), used during this sequence of tests.

Test Dependencies: There are no test dependencies for this sequence.

8.1.1.1 ECS Sites Nominal Operations Policy and Procedures Review

TEST Procedure No. A080110.010$E	**Date Executed:**	**Test Conductor**
Title:	ECS Sites Nominal Operations Policy and Procedures Review	
Objective:	This test verifies the existence, accessibility and usability of documented operational and maintenance policies and procedures.	
Requirements	**Acceptance Criteria**	
SMC-2605#A	This requirement is verified through demonstration. The LSM shall support the site and element in implementing ESDIS Project policies and procedures received from the SMC covering the following areas, at a minimum: a. Element responsibility and authority b. Resource management c. Fault recovery d. Testing e. Simulation f. Maintenance g. Logistics h. Performance evaluation i. Training j. Quality and product assurance k. Inventory management l. System enhancements m. Finance management n. Administrative actions o. Security The documented LSM MSS policies and procedures for the EDC ECS DAAC must be available for use at the EDC ECS DAAC.	
Test Inputs:	Release A Version Description Document (814/) Mission Operation Procedures for the ECS Project (611/OP3)	

Step-By-Step Procedures		
Step No.	**Input Action / Expected Results**	**Pass / Fail / Comments**
10	Tester: Confirms that configuration management has verified the Release A Version Description Document(DID 814) includes the following document: Mission Operation Procedures for the ECS Project(DID 611/OP3)	
20	Expected Result: Certified DID 611/OP3 is included in Release A Version Description Document (DID 814).	
30	Tester: Inspects DID 611/OP3 to verify that the following items are addressed: a. Site or element responsibility and authority b. Resource management c. Fault recovery d. Testing **e. Simulation (TBD)** f. Maintenance g. Logistics h. Performance evaluation i. Training j. Quality and product assurance k. Inventory management l. System enhancements m. Finance management n. Administrative actions o. Security	
40	Expected Result: The following items are addressed in DID 611/OP3: a. Site or element responsibility and authority b. Resource management c. Fault recovery d. Testing **e. Simulation - Section TBD** f. Maintenance g. Logistics h. Performance evaluation i. Training j. Quality and product assurance k. Inventory management l. System enhancements m. Finance management n. Administrative actions o. Security	
Data Reduction and Analysis Steps: The document DID 611/OP3 is inspected and SMC policies and procedures are verified.		
Signature:		**Date:**

8.1.1.2 ECS Hardware and Software Configuration Items Review

TEST Procedure No.: A080110.020$E	**Date Executed:**	**Test Conductor:**
Title:	ECS Hardware and Software Configuration Items Review	
Objective:	This test verifies the ECS hardware and software configuration items are on the system.	

Requirements	**Acceptance Criteria**
SMC-2515#A	This requirement is verified through test. The LSM shall provide configuration management for at least the operational hardware, system software, and scientific software within its element and for the migration of enhancements into the operational system. The Tester verifies that the Baseline Manager contains a version history of configuration controlled resources according to each site's operational baseline as described in the Release A Version Description Document (814)

Test Inputs: Release A Version Description Document (814)

Step-By-Step Procedures		
Step No.	**Input Action / Expected Results**	**Pass / Fail / Comments**
10	Tester: Check with configuration management personnel responsible for the EDC ECS DAAC that the Release A Version Description Document (814/) lists all hardware and software configuration items configured into the system.	
20	Expected Results: Configuration management personnel certify that the Release A Version Description Document (814/) contains all the hardware and software configuration items present and properly configured into the EDC ECS DAAC system.	
30	Computer Operator: Log into the MSS Local Management Server and execute the Baseline Manager application.	
40	Expected Results: Baseline Manager application displays on the screen.	
50	Computer Operator: Using the list of hardware and software configuration items listed in the Release A Version Description Document (814/), access and view each configuration item stored within the Baseline Manager	
60	Expected Results: Each of the configuration items listed in the Release A Version Description Document (814/) contains a. the current version; b. the current version's specifications and technical, operations, and maintenance documentation; c. the specification and technical documentation history; d. the "level of assembly" representation of the components; and e. the version history.	
70	Computer Operator: Exit the Baseline Manager.	
80	Expected Results: The screen returns to the UNIX prompt.	
Data Reduction and Analysis Steps:		
Signature:		**Date:**

8.1.2 Site Start-up Sequence

This sequence verifies the EDC ECS DAAC can be powered up using normal cold-start procedures, operated successfully for fifteen minutes (or less if approved by the AT test

conductor) and shutdown using normal shutdown procedures. The EDC ECS DAAC is subsequently restarted to verify the system's ability to perform normal "warm restart" procedures.

During the fifteen minutes of operational time, specific configuration changes are input to the system. After normal shutdown and restart, the observed system configuration is compared to the configuration prior to shutdown to verify the preservation of system configuration parameters.

Configuration: The subsystem needed to perform this sequence of tests are as follows. CSS/MSS, INS & ISS.

External Interfaces: There are no external interfaces needed for this sequence.

Operator Position(s): The operator position from the ECS Maintenance and Operations Position Descriptions document (607/OP2) needed to support this sequence is listed:

DAAC System Administrator

Operational Scenario(s): The operations scenario, taken from the Operations Scenarios for the ECS Project: Release-A document (605/OP1), that was used to develop tests in this sequence of tests are listed:

ECS System Shutdown/Startup Scenario (Section 3.1.1)

Test Dependencies: There are no test dependencies needed for this sequence of tests.

8.1.2.1 Site Startup Confidence

TEST Procedure No.: A080110.040$E	**Date Executed:**	**Test Conductor:**
Title:	Site Startup Confidence	
Objective:	The purpose of this test is to demonstrate a normal startup, operations and shutdown of the ECS site.	
Requirements	**Acceptance Criteria**	
EOSD3000#A	This requirement is verified through demonstration. The ECS shall provide for security safeguards to cover unscheduled system shutdown (aborts) and subsequent restarts, as well as for scheduled system shutdown and operational startup. System startup and shutdown must be accomplished using the cold startup and normal shutdown procedures documented in the Mission Operation Procedures for the ECS Project (611/OP3). This test does not verify unscheduled system shutdown and subsequent restarts. This is verified in 8.1.4 Site Shutdown/ Recovery Sequence.	
Test Inputs: Mission Operation Procedures for the ECS Project (611/OP3)		

Step-By-Step Procedures		
Step No.	**Input Action / Expected Results**	**Pass / Fail / Comments**
	Perform an ECS cold startup in accordance with procedures documented in the Mission Operation Procedures for the ECS Project (611/OP3).	
10	System Administrator: Powers on the system components.	
20	Expected Results: System components respond. This is conveyed by power on indicator lights.	
30	System Administrator: Initializes the script to startup the system.	
40	Expected Result: Execution of the Startup Script. MSS Agent is initialized. MSS Agent calls the Client Startup Script. Client software is started. MSS Agent calls the Data Management Subsystem Startup Script. Data Management Subsystem is started. MSS Agent calls the Ingest Startup Script. Ingest Subsystem is started. MSS Agent calls the Data Processing Startup Script. Data Processing Subsystem is started. MSS Agent opens the gateway to allow for incoming requests.	
50	System Administrator: Initializes HP OpenView.	
60	Expected Result: HP OpenView displays on the screen.	
70	System Administrator: Using the system management agent, configure the display to monitor a specific set of software and hardware elements.	
80	Expected Result: HP OpenView displays the specific set of elements.	
90	System Administrator: Save the configuration.	
100	Expected Results: The system management agent stores the new display configuration.	
110	System Administrator: Monitors HP OpenView to insure that all of the subsystems have been initialized.	
120	Expected Results: HP OpenView shows that each of the subsystems are up and running without any problems. This is conveyed by HP OpenView by a green icon representing each of the components.	
130	System Administrator: Sends out a message to the Computer Operators and the Resource Manager notifying them that the system is up and running.	
140	Expected Results: A pop up message is displayed on the Computer Operators' and the Resource Manager's screens.	

150	System Administrator: Monitors the system for 15 minutes.	
160	Expected Results: HP OpenView shows that each of the subsystems are up and running without any problems. This is conveyed by HP OpenView by a green icon representing each of the components.	
	Normal Shutdown	
170	System Administrator: Sends out a message to the Computer Operators and the Resource Manager notifying them that the system is going down in T-15 minutes.	
180	Expected Results: A pop up message is displayed on the Computer Operators' and the Resource Manager's screens.	
190	System Administrator: Sends out a message to the Computer Operators and the Resource Manager notifying them that the system is going down in T-10 minutes.	
200	Expected Results: A pop up message is displayed on the Computer Operators' and the Resource Manager's screens.	
210	System Administrator: Sends out a message to the Computer Operators and the Resource Manager notifying them that the system is going down in T-1 minute.	
220	Expected Results: A pop up message is displayed on the Computer Operators' and the Resource Manager's screens. At Shutdown, the system no longer allows incoming requests.	
230	System Administrator: Waits for all jobs to complete. If a job running will take longer than 10 minutes to complete the job will be stopped and the originator will be notified. Execute a "ps" command to verify that all processes have completed.	
240	Expected Results. Response to "ps" command denotes that all jobs have completed.	
250	System Administrator: Shuts down the Data Processing Subsystem.	
260	Expected Results: System shuts down the Data Processing Subsystem.	
270	System Administrator: Monitors HP OpenView to see when the Data Processing Subsystem has shutdown.	
280	Expected Results: The HP OpenView icon for the Data Processing Subsystem turns red denoting the Data Processing Subsystem is shutdown.	
290	System Administrator: Shuts down the Ingest Subsystem.	
300	Expected Results: System shuts down the Ingest. Subsystem	
310	System Administrator: Monitors HP OpenView to see when the Ingest Subsystem has shutdown.	
320	Expected Results: The HP OpenView icon for the Ingest Subsystem turns red denoting the Ingest is shutdown.	

330	System Administrator: Shuts down the Data Management Subsystem.	
340	Expected Results: System shuts down the Data Management Subsystem.	
350	System Administrator: Monitors HP OpenView to see when the Data Management Subsystem has shutdown.	
360	Expected Results: The HP OpenView icon for the Data Management Subsystem turns red denoting the Data Management is shutdown.	
370	System Administrator: Shuts down the Client software.	
380	Expected Results: System shuts down the Client software.	
390	System Administrator: Monitors HP OpenView to see when the Client software has shutdown.	
400	Expected Results: The HP OpenView icon for the Client software turns red denoting the Client software is shutdown.	
410	System Administrator: Shuts down the MSS Subsystem.	
420	Expected Results: System shuts down the MSS Subsystem and the UNIX prompt appears.	
Data Reduction and Analysis Steps:		
Signature:		**Date:**

8.1.2.2 Site Restart Including Introduction of Previous Results

TEST Procedure No.: A080120.010$E	**Date Executed:**	**Test Conductor:**
Title:	Site Restart Including Introduction of Previous Results	
Objective:	This test demonstrates the ability of the ECS to perform a warm restart and demonstrates that configuration inputs from the prior operational state are still active following a shutdown and restart process.	

Requirements	**Acceptance Criteria**
EOSD3000#A	This requirement is verified though demonstration. The ECS shall provide for security safeguards to cover unscheduled system shutdown (aborts) and subsequent restarts, as well as for scheduled system shutdown and operational startup. The ECS must perform a warm restart and demonstrate the return to the preserved configuration from the previous operational state. This test does not verify “unscheduled system shutdown (aborts) and subsequent restarts” and “scheduled system shutdown. They are verified in 8.1.4 Site Shutdown/Recovery Sequence and 8.1.2.1 Site Startup Confidence Test respectively.
Test Inputs: Mission Operation Procedures for the ECS Project (611/OP3)	

Step-By-Step Procedures		
Step No.	**Input Action / Expected Results**	**Pass / Fail / Comments**
	Perform an ECS warm restart in accordance with procedures documented in the <u>Mission Operation Procedures for the ECS Project</u> (611/OP3).	
10	System Administrator: Initializes the script to startup the system.	
20	Expected Result: Execution of the Startup Script. MSS Agent is initialized. MSS Agent calls the Client Startup Script. Client software is started. MSS Agent calls the Data Management Subsystem Startup Script. Data Management Subsystem is started. MSS Agent calls the Ingest Startup Script. Ingest Subsystem is started. MSS Agent calls the Data Processing Startup Script. Data Processing Subsystem is started. MSS Agent opens the gateway to allow for incoming requests.	
30	System Administrator: Initializes HP OpenView.	
40	Expected Result: HP OpenView displays on the screen.	
50	System Administrator: Verifies that the configuration saved in test 8.1.2.1, step 90 is displayed on the screen.	
60	Expected Results: HP OpenView shows that each of the subsystems are up and running without any problems. This is conveyed by HP OpenView by a green icon representing each of the components.	
70	System Administrator: Sends out a message to the Computer Operators and the Resource Manager notifying them that the system is up and running.	
80	Expected Results: A pop up message is displayed on the Computer Operators' and the Resource Manager's screens.	
90	System Administrator: Monitors the system for 15 minutes.	
100	Expected Results: HP OpenView shows that each of the subsystems are up and running without any problems. This is conveyed by HP OpenView by a green icon representing each of the components.	
Data Reduction and Analysis Steps:		
Signature:		**Date:**

8.1.3 Site Operations Sequence

This sequence is not valid for the EDC ECS DAAC Volume of the Acceptance Test Procedures document for Release A.

8.1.4 Site Shutdown/Recovery Sequence

This sequence evaluates the capability of the ECS site to perform documented emergency shutdown procedures. This sequence also evaluates the capability of the ECS site to recover from the abnormal shutdown and to provide continued performance, albeit in a degraded mode, during a device failure. A device failure is simulated during the restart process by forcing the RAID storage device to go off-line.

Configuration: The subsystem needed to perform this sequence of tests are as follows. CSS/MSS, INS & ISS.

External Interfaces: There are no external interfaces needed for this sequence.

Operator Position(s): The operator positions from the ECS Maintenance and Operations Position Descriptions document (607/OP2) needed to support this sequence are listed:

DAAC Computer Operator

DAAC System Administrator

DAAC Resource Manager

DAAC Production Monitor

Operational Scenario(s): The operations scenario, taken from the Operations Scenarios for the ECS Project: Release-A document (605/OP1), that was used to develop tests in this sequence of tests are listed:

Computer System Administration Backup & Restore/Recovery (Section 3.1.2)

Test Dependencies: The following table identifies the test procedure(s) in a sequence of tests that should be run prior to or concurrently with a sequence or test procedure.

Test Procedure No.	Site/Procedure No.	Comments
A080140.010$E A080150.010$E A080150.020$E	A080170.080$E	Run A080170.080$E prior to any test in this sequence.
A080140.010$E A080150.010$E A080150.020$E	A080180.090$E	Run A080180.090$E prior to any test in this sequence.
A080150.010$E	A080620.040$E	Run A080620.040$E prior to A080150.010$E

8.1.4.1 Emergency and Other Abnormal Shutdown

TEST Procedure No.: A080140.010$E	**Date Executed:**	**Test Conductor:**
Title:	Emergency and Other Abnormal Shutdown	
Objective:	This confirms that the site's standard procedures contain methodology for responding to catastrophic situations that require immediate site shutdown and for other types of abnormal shutdown such as system critical equipment failure.	

Requirements	**Acceptance Criteria**
EOSD3000#A	This requirement is verified through demonstration. The ECS shall provide for security safeguards to cover unscheduled system shutdown (aborts) and subsequent restarts, as well as for scheduled system shutdown and operational startup. The emergency shutdown of the ECS must be accomplished using the procedures documented in the Operator's Manual. This test does not verify “subsequent restarts, as well as for scheduled system shutdown and operational startup”, are not verified in this procedure and are verified in 8.1.2 Site Startup Sequence

Test Inputs: Mission Operation Procedures for the ECS Project (611/OP3)

Data Set Name	**Data Set ID**	**File Name**	**Description**	**Version**
		BadCfgFile	Bad Configuration File	

Step-By-Step Procedures		
Step No.	**Input Action / Expected Results**	**Pass / Fail / Comments**
10	Computer Operator: Perform an emergency shutdown in accordance with procedures documented in the Mission Operation Procedures for the ECS Project (611/OP3).	
20	Expected Results: The system is in the shut down state where each subsystem is offline. **A more detailed description of the shutdown state will be incorporated upon completion of the Mission Operation Procedures for the ECS Project (611/OP3).**	
Data Reduction and Analysis Steps:		
Signature:		**Date:**

8.1.4.2 Recovery From Catastrophic Emergency Shutdown

TEST Procedure No.: A080150.010$E	**Date Executed:**	**Test Conductor:**
Title:	Recovery From Catastrophic Emergency Shutdown	
Objective:	The purpose of this test is to verify the ECS site can recover from an emergency shutdown and that the FSMS can continue to provide service in the event of a device failure.	

Requirements	**Acceptance Criteria**
DADS1540#A	This requirement is verified through demonstration. In case of corruption or catastrophic failure, capabilities for recovering the file directory shall be provided. The DADS must be able to restore files after a catastrophic failure. This test does not verify data corruption. This is verified in 8.1.4.3 Recovery From Abnormal Non-Catastrophic Shutdown.
EOSD2990#A	This requirement is verified through demonstration. The ECS elements shall support the recovery from a system failure due to a loss in the integrity of the ECS data or a catastrophic violation of the security system. The system must be able to restore files following a simulated catastrophic violation of the security system. This test does not verify "...the recovery from a system failure due to a loss in the integrity of the ECS data…". This is verified 8.1.4.3 Recovery From Abnormal Non-Catastrophic Shutdown.
EOSD3000#A	This requirement is verified through demonstration. The ECS shall provide for security safeguards to cover unscheduled system shutdown (aborts) and subsequent restarts, as well as for scheduled system shutdown and operational startup. The system must be able to restore files following a simulated catastrophic violation of the security system. This test does not verify "unscheduled system shutdown (aborts)" and "scheduled system shutdown and operational startup." They are verified in 8.1.4.1 Emergency and Other Abnormal Shutdown and 8.1.2 Site Startup Sequence respectively.

Test Inputs: Operator's Manual

Step-By-Step Procedures		
Step No.	**Input Action / Expected Results**	**Pass / Fail / Comments**
	NOTE **A080620.040$E must be run prior to this test.**	
10	Computer Operator: Attempts to bring the system back on-line, but discovers that some key files are missing.	
20	Expected Results: A file listing of the system does not contain the key files.	
30	Computer Operator: Determines that a full restore of the system files from a previous backup will fix the problem. Enters the commands to initialize the scripts to begin the restore.	
40	Expected Results: System initializes the scripts to restore the software.	
50	Computer Operator: Invokes the word processor and moves to the backup directory, to review the log file associated with the backup being restored.	
60	Expected Results: System displays the log file on terminal.	
70	Computer Operator: Selects the backupxxxxxx.log file (where xxxxxx represents the month, day, and year of the backup).	
80	Expected Results: System displays appropriate log file.	
90	Computer Operator: Prints out a copy of the log file.	
100	Expected Results: Prints the log file.	
110	Computer Operator: Exits the log file directory.	
120	Expected Results: System returns to word processor. Restore concludes and an indicator is returned to the operator.	
130	Computer Operator: From the word processor that is already up, opens the file pull down menu and selects open. Then, opens the associated QA report.	
140	Expected Results: System displays the QA report.	
150	Computer Operator: Compares the QA report with the log file from the backup that was restored.	
160	Expected Results the QA report and the log file list the same files.	
170	System Administrator: Initializes the script to startup the system as described in the Mission Operation Procedures for the ECS Project (611/OP3).	
180	Expected Results: HP OpenView shows that each of the subsystems are up and running without any problems. This is conveyed by HP OpenView by a green icon representing each of the components.	

Data Reduction and Analysis Steps:	
a. The following are secured for analysis at the close of the procedure: 1. Backup log. 2. QA report. b. Verify the QA report confirms the contents of the files restored from the archive media (listed on the backup log.	
Signature:	**Date:**

8.1.4.3 Recovery From Abnormal Non-Catastrophic Shutdown

TEST Procedure No.: A080150.020$E	**Date Executed:**	**Test Conductor:**
Title:	Recovery From Abnormal Non-Catastrophic Shutdown	
Objective:	This test confirms the sites ability to restore files caused by an abnormal non-catastrophic shutdown using standard operational procedures and that the FSMS can continue to provide service in the event of a device failure.	

Requirements	**Acceptance Criteria**
EOSD2990#A	This requirement is verified by demonstration. The ECS elements shall support the recovery from a system failure due to a loss in the integrity of the ECS data or a catastrophic violation of the security system. The EDC ECS DAAC must be able to restore the files following a simulated non-catastrophic failure. Part of the requirements, “a catastrophic violation of the security system”, is not verified in this procedure and is verified in 8.1.4.2 Recovery From Catastrophic Emergency Shutdown.

Test Inputs: Mission Operation Procedures for the ECS Project(DID 611/OP3)
MSS Workstation disc backup file

Data Set Name	**Data Set ID**	**File Name**	**Description**	**Version**
N/A				

Step-By-Step Procedures		
Step No.	**Input Action / Expected Results**	**Pass / Fail / Comments**
10	Computer Operator: Executes a simulated MSS Workstation disc crash then examines the HP OpenView.	
20	Expected Result: The EDC icon in HP OpenView is red.	
30	Computer Operator: Double clicks on the EDC icon to go down to the next level of submaps.	
40	Expected Result: The EDC submap displays on the screen. The MSS-EDC-1 icon is red.	
50	Computer Operator: Double clicks on the MSS-EDC-1 icon to go down to the next level of submaps.	
60	Expected Result: The MSS-EDC-1 submap displays on the screen. The disk drive icon is red.	
70	Computer Operator: Fails to write to the disk and determines that the disk has crashed.	
80	Expected Results: The disk cannot be written to.	
90	Computer Operator: Schedules the replacement and restore of the disk with the Resource Controller .	
100	Expected Results: Based on the resources needed and the time required to conduct the restore the event is scheduled.	
110	Computer Operator: Notifies all affected users that the system has crashed and a restore is scheduled at hhmm. This message also indicates the date of the backup to be used for restoration.	
120	Expected Results: System sends e-mail.	
130	Computer Operator: Retrieves the backup.	
140	Expected Result: The backup is retrieved.	
150	Computer Operator: Enters the commands to initialize the scripts to begin the restore.	
160	Expected Results: System initializes the scripts to restore the MSS Workstation disc file.	
170	Computer Operator: Invokes the word processor and selects “Open” from the file pull down menu to review the log file associated with the backup being restored.	
180	Expected Results: System displays the log file on the terminal.	
190	Computer Operator: Selects the Restorexxxxxx.log (where xxxxxx equals the month, day and year).	
200	Expected Results: System displays appropriate log file.	
210	Computer Operator: Prints out a copy of the log file.	
220	Expected Results: The log file is printed.	
230	Computer Operator: Exits the log file directory.	
240	Expected Results: System returns to word processor. Restore concludes and an indicator is returned to the operator.	

250	Computer Operator: Restores the incremental backups taken since the last system backup, on top of the restored system backup to bring the system as close to realtime as possible. (To determine the latest incremental backup, the operator opens the **inc_bkup_doc (tbd)** file from the word processor and views a list of the latest incremental backups.)	
260	Expected Results: The incremental backup restore is concluded and an indicator is returned to the operator.	
270	Computer Operator: From the word processor that is already up, initializes the QA report associated with the restore.	
280	Expected Results: System displays the QA report.	
290	Computer Operator: Compares the QA report with the Log file from the backup that was restored.	
300	Expected Results: the contents of the QA report and the log file are the same. (This step is to be analyzed at Data Reduction and Analysis time.)	
310	Computer Operator: verifies that the system is back up and operational.	
320	Expected Results: HP OpenView shows that the EDC icon is up and running without any problems. This is conveyed by HP OpenView by a green icon.	
330	Computer Operator: Notifies (via e-mail) the affected users that the restore has concluded.	
340	Expected Results: System delivers e-mail.	
Data Reduction and Analysis Steps: The backup log file (containing list of files backed up) and the QA report (containing list of files restored) are collected and analyzed. Verify that the QA report contains the same file as that of the backup log.		
Signature:		**Date:**

8.1.5 Site Maintenance Sequence

The Site Maintenance sequence is composed of demonstrations of maintenance and operations (M&O) tools at Release A sites. The primary purpose is to assure that the staff can access M&O services, via appropriate interfaces, allowing them to select the correct M&O interface to ECS subsystems from local and remote terminals. ECS functions requiring an M&O interface are system management, science algorithm integration, product generation, data archiving and distribution, user support services and system maintenance.

Configuration: The subsystem needed to perform this sequence of tests are as follows. CSS/MSS, INS & ISS.

External Interfaces: The external interface (i.e. other ECS sites and data sources) needed for this sequence (both real and simulated) is listed:

SMC

Operator Position(s): The operator positions from the ECS Maintenance and Operations Position Descriptions (607/OP2) document needed to support this sequence are listed:

DAAC Operations Supervisor

DAAC Resource Manager

DAAC Archive Manager

DAAC Computer Operator

DAAC User Services Representative

DAAC Ingest Distribution Technician

Operator Scenario(s): There are no operations scenarios, taken from the Operations Scenarios for the ECS Project: Release-A (605/OP1), used during this sequence of tests.

Test Dependencies: There are no test dependencies needed for this sequence of tests.

8.1.5.1 DAAC M&O Interfaces

TEST Procedure No.: A080160.010$E	**Date Executed:**	**Test Conductor:**
Title:	DAAC M&O Interfaces	
Objectives:	Demonstrate that M&O interfaces, provided for EDC DAAC ECS subsystems are accessible and functioning and that these interfaces are sufficient to support planned operations and maintenance activities. Demonstrate that the M&O interface provides access to on-line services for Accountability, Fault Management, Performance Management, and Report Generation. Demonstrate that other on-line services are available for three aspects of security management network, communications and host processors along with general message exchange services to support E-mail, FTP file access, Bulletin Board, and Virtual Terminal capabilities. Demonstrate that the M&O interface provides access to off-line configuration control services to support Baseline Management, S/W Change Management, Change Request Management, S/W Distribution Management, and S/W License Management, Demonstrate that the M&O interface provides access to off-line resource management services to support Inventory management, Logistics management, Training and Policies & Procedures management using Office Automation tools.	

Requirements	**Acceptance Criteria**
EOSD1703#A	This requirement is verified through demonstration. The system shall provide M&O interfaces which support the functions of: a. System Management, b. Science Algorithm Integration, c. Product Generation, d. Data Archive/Distribution, e. User Support Services, and f. System Maintenance. M&O interfaces must provide system management functionality with links to Accountability Services, Management Data Access services and Fault Management services. Fault Management Services must provide access to external systems, interfaces with management agents, Performance Management Services, Security services, M&O system management interfaces must include links to CSS and system log.

	The interfaces must provide access to AI&T team data, and Bulletin Board(s) via ECS workstations using Virtual Terminals. M&O interfaces must provide initialization, recovery and orderly shutdown for the following CIs SPRHW, AITHW, ICLHW, AND PLNHW.
EOSD1705#A	This requirement is verified through demonstration. ECS shall support interfaces to DAAC Unique Components. Demonstrate that management application services initiate requests for data and commands, via management agents, to monitor EDC DAAC ECS managed objects and the corresponding responses and notifications match requests. Demonstrate use of services to support establishment of password and login policy via access to security authentication database. Demonstrate compliance with requirements for audits associated with management of passwords. Demonstrate capabilities to use security services to support detection of viruses, break-ins attempts and other intrusion activities. Demonstrate event resolution support services for recovery activities, and system management report generation.

Test Inputs:

Data Set Name	Data Set ID	File Name	Description	Version
Accountability Registered Users (principal)				
Access Control List (EDC)				
Host Authentication database				
User Profiles				
User Audit Trial				
Data Product Audit Trail				
DCE registry database				
Router configuration database				

Step-By-Step Procedures		
Step No.	**Input Action / Expected Results**	**Pass / Fail / Comments**
	M&O Staff Interface	
	Use MSS services to demonstrate M&O interface capabilities and services.	
10	Resource Manager: Use MSS M&0 Staff Interfaces to demonstrate services.	
20	Expected Results: TBS	
Data Reduction and Analysis Steps:		
Signature:		**Date:**

8.1.5.2 Maintenance of ECS Databases

TEST Procedure No.: A080160.020$E	**Date Executed:**	**Test Conductor**
Title:	Maintenance of ECS Databases	
Objective:	Demonstrate that interfaces between the ECS Subsystem Servers and their respective M&O Administrative terminal(s) will support Maintenance of ECS Data bases. Demonstrate that maintenance of ECS DBs do not require a "change" of display screens after modification of database structures provided by ECS DB servers. Demonstrate capabilities to interrupt maintenance session and restart the session without loss of information. Verify through Inspection that EDC LSM database maintenance capabilities reflect cross site standards for maintenance of ECS Databases. The procedure assures that the procedures are available, current, and complete.	

Requirements	Acceptance Criteria
IMS-0170#A	The requirement is verified through demonstration. The IMS user interface shall be designed so that restructuring of the IMS data bases shall not result in the need for changes to the IMS interfaces.
IMS-0220#A	The requirement is verified through demonstration. The IMS shall store, maintain and provide data management services for ECS directory, inventory, and guide (documentation/reference material) and other IMS databases.
IMS-0240#A	The requirement is verified through demonstration. The IMS shall provide, at a minimum, database administration utilities for: a. modification of ECS database schema, b. performance monitoring, c. performance tuning, d. administration of user access control, e. perform on-line incremental backup, f. perform on-line recovery, and g. export/import of data. Demonstrate that once a DB administration utility session is established, it's capabilities and services are segmented and exercised in a mutually exclusive fashion. Demonstrate that any combination of (a) through (g) can be exercised concurrently on a single Operations workstation or across multiple workstations.
IMS-0250#A	This requirement is verified through demonstration. The IMS shall provide required maintenance of the IMS data bases, to include at a minimum: a. Capability to restructure the data base b. Capability to interrupt a maintenance session and restart the session without loss of information. The Tester must be able to restructure the database and restart without loss of information following an interruption of a maintenance session.
IMS-0260#A	This requirement is verified through demonstration.

	The IMS must provide interactive and batch information management capabilities for authorized users to add, update, delete and retrieve information from the ECS data databases. Demonstrate capabilities for authorized personnel to access and use DB administration services in both batch and interactive modes of operation. Demonstrate capability to submit batch tasks which accomplish DB updates, DB deletions and DB retrievals to/from ECS data resources. Demonstrate capability to interactively control tasks to accomplish DB updates, DB deletions and DB retrievals to/from ECS data resources.
IMS-0290#A	This requirement is verified through demonstration. IMS internal data base management queries shall be expressed in a standard query language (SQL). Demonstrate database management queries written in SQL. **Change method from analysis to demonstration in CCR.**

Test Inputs:

Data Set Name	Data Set ID	File Name	Description	Version
Registered Users (principal)			Principal users by organization (ECS/Non-ECS)	
Access Control List (EDC)			Access to ECS resources with account links	
Authentication's			Authentication's and Authorization of ECS service operations by group and user.	
User Profiles			Contact information, affiliations, sponsor, account number, shipping and billing , privileges, expiration date, e-mail etc..	
Advertising Service DB			Advertising Service DB Collection and Schema	

Step-By-Step Procedures		
Step No.	**Input Action / Expected Results**	**Pass/Fail/Comments**
	Science Data Server (SDSVR) CSCI	
10	Resource Manager: Use MSS M&0 Staff Interfaces to demonstrate services.	
20	Expected Results: TBS	
Data Reduction and Analysis Steps:		
Signature:		**Date:**

8.1.6 Site Data/Metadata/Information Management Sequence

The EDC DAAC's ability to produce specified backups is also included in this sequence. The ECS capability for storage of ECS data/metadata information in local and off-site locations is verified.

Configuration: The subsystem needed to perform this sequence of tests are as follows. CSS/MSS, INS & ISS.

External Interfaces: There are no external interfaces needed for this sequence.

Operator Position(s): The operator position from the ECS Maintenance and Operations Position Descriptions document (607/OP2) needed to support this sequence is listed:

DAAC Computer Operator

DAAC System Administrator

Operational Scenario(s): The operations scenario, taken from the Operations Scenarios for the ECS Project: Release-A document (605/OP1), that was used to develop tests in this sequence of tests are listed:

Computer System Administration Backup & Restore/Recovery Scenario (Section 3.1.2)

Test Dependencies: There are no test dependencies needed for this sequence of tests.

8.1.6.1 File Management

This test procedures is not applicable for the EDC Volume of the Acceptance Test Procedures document for Release A.

8.1.6.2 ECS Storage/Archive/Backup Capability

TEST Procedure No.: A080170.020$E	**Date Executed:**	**Test Conductor:**
Title: ECS Storage/Archive/Backup Capability		
Objective: The purpose of the test is to confirm the site's capability to store, archive, and backup data.		

Requirements	**Acceptance Criteria**
EOSD3200#A	This requirement is verified through test. A minimum of one backup which is maintained in a separate physical location shall be maintained for ECS software and key data items. The Tester makes a full backup of the site as well as a copy and verifies that the copy is stored in an off-site location.
EOSD3220#A	This requirement is verified through inspection. All media shall be handled and stored in protected areas with environmental and accounting procedures applied. The Tester verifies the existence of an off-site backup copy of data and verify the environmental and accounting procedures are applied in accordance with the Property Management Plan for the ECS Project (602/OP1).

Test Inputs: Mission Operation Procedures for the ECS Project (611/OP3)
Property Management Plan for the ECS Project (602/OP1)

Data Set Name	**Data Set ID**	**File Name**	**Description**	**Version**

Step-By-Step Procedures		
Step No.	**Input Action / Expected Results**	**Pass / Fail / Comments**
	Full Backup	
10	Computer Operator: Performs a full system backup in accordance with the procedures documented in the Mission Operation Procedures for the ECS Project (611/OP3).	
20	Expected Results: The system performs a full backup.	
30	Computer Operator: Lists files contained on the backup media. Verifies content of the listing.	
40	Expected Results: Displays files contained on the backup media.	
50	Computer Operator: Dumps contents of the backup media. Verifies the format of the data.	
60	Expected Results: The backup format meets ECS standards.	
70	Computer Operator: Makes a copy of the backup.	
80	Expected Results: The software performs the copy. Copy completes.	
90	Computer Operator: Unload and remove backup media from the storage devices. Insert new blank tape.	
100	Expected Results: Full backup tape is removed and new blank tape is loaded.	
110	Computer Operator: Marks the copy for off-site storage. Store the full backup and its copy in an off-site protected area	
120	Expected Results: Full backup copy is marked. The full backup and its copy is stored in an off-site protected area	
	Incremental Backup	
130	Computer Operator: Performs an incremental backup in accordance with the procedures documented in the Mission Operation Procedures for the ECS Project (611/OP1).	
140	Expected Results: The system performs an incremental backup.	
150	Computer Operator: Lists files contained on the backup media. Verifies content of the listing.	
160	Expected Results: Displays files contained on the backup media.	
170	Computer Operator: Dumps contents of the backup media. Verifies the format of the data.	
180	Expected Results: The backup format meets ECS standards.	
190	Computer Operator: Makes a copy of the backup.	
200	Expected Results: The software performs the copy. Copy completes.	
210	Computer Operator: Unload and remove backup media from the storage devices. Insert new blank tape.	

220	Expected Results: Incremental backup tape is removed and new blank tape is loaded.	
230	Computer Operator: Marks the copy for off-site storage. Store the incremental backup and its copy in an off-site protected area	
240	Expected Results: Incremental backup copy is marked. The full backup and its copy is stored in an off-site protected area	
Data Reduction and Analysis Steps:		
Signature:		**Date:**

8.1.7 Facilities Interfaces Sequence

This sequence verifies the basic connectivity and fundamental protocols for EDC ECS DAAC external and internal interfaces in support of Release A operations. Confirmation of ECS internal (SMC, LaRC, and GSFC) and external interfaces (MODIS SCF, ASTER SCF and V0 DAACs) is performed through inspection of before and after data transmission products compared to requirements. Internal ECS interfaces are evaluated similarly. The operational version of external systems are used if they are mature and available at the time of acceptance testing on this sequence. Otherwise, simulators are used.

Configuration: The subsystem needed to perform this sequence of tests are as follows. CSS/MSS, INS & ISS.

External Interfaces: The external interfaces (i.e. other ECS sites and data sources) needed for this sequence (both real and simulated) are listed:

SMC

GSFC V0 DAAC

LaRC V0 DAAC

EDC V0 DAAC

MSFC V0 DAAC

ASTER SCFs

MODIS SCFs

Operator Position(s): The operator positions from the ECS Maintenance and Operations Position Descriptions document (607/OP2) needed to support this sequence are listed:

DAAC Computer Operator

SMCC Computer Operator

Operational Scenario(s): There are no operations scenarios, taken from the Operations Scenarios for the ECS Project: Release-A (605/OP1), used during this sequence of tests.

Test Dependencies: The following table identifies the test procedure(s) in a sequence of tests that should be run prior to or concurrently with a sequence or test procedure.

Test Procedure No.	Site/Procedure No.	Comments
A080180.090$E	A080180.090$L A080180.090$G A080180.090$F A080180.090$S	Concurrent

8.1.7.1 SMC External Interfaces

This test procedure is not applicable for the EDC Volume of the Acceptance Test Procedures document for Release A.

8.1.7.2 EOC External Interfaces

This test procedure is not applicable for the EDC Volume of the Acceptance Test Procedures document for Release A.

8.1.7.3 GSFC DAAC External Interfaces

This test procedure is not applicable for the EDC Volume of the Acceptance Test Procedures document for Release A.

8.1.7.4 LaRC DAAC External Interfaces

This test procedure is not applicable for the EDC Volume of the Acceptance Test Procedures document for Release A.

8.1.7.5 EDC DAAC External Interfaces

TEST Procedure No.: A080180.080$E	**Date Executed:**	**Test Conductor:**
Title: EDC External Interfaces		
Objective: This test case verifies EDC connectivity with ECS external systems via e-mail		

Requirements	Acceptance Criteria
ESN-0070#A	This requirement is verified through test. The ESN shall support the intrasite elements data flow requirements identified in this specification. The ISS must provide for connectivity with external interfaces in order to transfer data to the SMC.
ESN-0280#A	This requirement is verified through test. The ESN shall provide file transfer and management service and as a minimum must include the capability to transfer the following data types: a. Unstructured Text b. Binary Unstructured c. Binary Sequential

	d. Sequential Text The CSS File Access Service must be able to transfer text and binary files.
ESN-0290#A	This requirement is verified through test. The file transfer and management service shall be available in interactive and non-interactive services. The CSS File Access Service must provide functionality for interactive and non-interactive transfer of files (send and receive) between two host systems.
ESN-0300#A	This requirement is verified through test. The file transfer and management non-interactive services shall be able to be scheduled. The CSS File Access Service must provide an option for scheduling file transfers in a batch mode.

Test Inputs:

Data Set Name	Data Set ID	File Name	Description	Version
EMAIL_001			Sample E-mail message	
EMAIL_002			Sample E-mail attachment	

Step-By-Step Procedures		
Step No.	**Input Action / Expected Results**	**Pass / Fail / Comments**
10	EDC Computer Operator: Access Communications Server and invoke E-mail software.	
20	Expected Results: The E-mail software window is displayed.	
30	EDC Computer Operator: Create a new message. Specify E-mail address at ASTER SCF. Specify subject and body of message to be sent to ASTER SCF. Attach file to the message. Send the message to ASTER SCF.	
40	Expected Results: The message is sent to ASTER SCF.	
50	EDC Computer Operator: View EDC E-mail logs to verify transmission of each E-mail message.	
60	Expected Results: System logs reflect transmission of each E-mail message.	
70	ASTER SCF Personnel: Views E-mail. The message is inspected for evidence of transmission errors.	
80	Expected Results: The message transmission does not contain any evidence of transmission errors, such as garbled text.	
90	ASTER SCF Personnel: Creates a reply message specifying E-mail address at EDC as well as the subject and body of message. Send the message to the EDC.	
95	Expected Results. The message is sent to the EDC.	
100	EDC Computer Operator: Opens reply message verifying receipt of reply message. Prints and deletes message.	
110	Expected Results: The hardcopy is available from the printer. The message no longer resides in the In box.	
120	EDC Computer Operator: Access Communications Server and invoke E-mail software.	
130	Expected Results: The E-mail software window is displayed.	
140	EDC Computer Operator: Create a new message. Specify E-mail address at MODIS SCF. Specify subject and body of message to be sent to MODIS SCF. Attach file to the message. Send the message to MODIS SCF.	
150	Expected Results: The message is sent to MODIS SCF.	
160	EDC Computer Operator: View EDC E-mail logs to verify transmission of each E-mail message.	
170	Expected Results: System logs reflect transmission of each E-mail message.	
180	MODIS SCF Personnel: Views E-mail. The message is inspected for evidence of transmission errors.	
190	Expected Results: The message transmission does not contain any evidence of transmission errors, such as garbled text.	

200	MODIS SCF Personnel: Creates a reply message specifying E-mail address at EDC as well as the subject and body of message. Send the message to the EDC.	
210	Expected Results. The message is sent to the EDC.	
220	EDC Computer Operator: Opens reply message verifying receipt of reply message. Prints and deletes message.	
230	Expected Results: The hardcopy is available from the printer. The message no longer resides in the In box.	
Data Reduction and Analysis Steps: a. The following are secured for analysis at the close of the procedure: E-mail logs and messages.		
Signature:		**Date:**

8.1.7.6 ECS Internal Interfaces

TEST Procedure No.: A080180.090$E	**Date Executed:**	**Test Conductor:**
Title:	ECS Internal Interfaces	
Objective:	This test case verifies the capability for the EDC DAAC to communicate with the SMC.	

Requirements	Acceptance Criteria
ESN-0010#A	This requirement is verified through test. ESN shall provide the following standard services: a. Data Transfer and Management Services b. Electronic Messaging Service c. Remote Terminal Service d. Process to Process Communication Service e. Directory and User Access Control Service f. Network Management Service g. Network Security and Access Control Service h. Internetwork Interface Services i. Bulletin Board Service The CSS Electronic Mail Service must allow the users to create, modify and delete messages. The CSS Electronic Mail Service must provide the ability to send and receive messages. The CSS Electronic Mail Service must provide the ability to attach files to messages. This test does NOT verify parts c, e, f and g of the requirement.
ESN-0340#A	This requirement is verified through test. The ESN shall interoperate and exchange messages and data with external SMTP and X.400 mail systems. The Tester must verify the ability to provide translation between SMTP and X.400 protocols by creating a message in one protocol and sending/receiving it in another.
ESN-0345#A	This requirement is verified through test. The ESN shall be capable of transparently transmitting Multi-purpose Internet Mail Extensions (MIME) messages. The CSS Electronic Mail Service must be capable of sending and receiving the Multi-purpose Internet Mail Extensions (MIME) messages.
ESN-0350#A	This requirement is verified through test. The Electronic Messaging Service shall be capable of exchanging binary data. The CSS Electronic Mail Service must allow attaching either text or binary files to a message.
ESN-0450#A	This requirement is verified through test. The ESN shall provide process-to-process communication service. The CSS Message service must provide an API for senders to send messages to receivers asynchronously without waiting for the receivers to receive it.
ESN-1170#A	This requirement is verified through test. The ESN must provide necessary translation within supported file transfer and e-mail services. The CSS Electronic Mail Service must provide translation between SMTP and X.400 protocol.

ESN-1181#A	This requirement is verified through demonstration. The ESN shall provide an ECS Bulletin Board capability. The CSS Bulletin Board Service must allow the users to post messages to and delete messages from bulletin board(s). The CSS Bulletin Board Service must provide the capability for copying files. The CSS Bulletin Board Service must support multiple bulletin boards. The CSS Bulletin Board Service must allow multiple messages for each bulletin board.
IMS-1600#A	This requirement is verified through demonstration. The IMS shall provide access to the following communication services at a minimum: a. File transfer b. Multi media mail c. Remote log-on d. Electronic Bulletin Board e. Access to other networks The Tester verifies the capabilities of the CSS Mail Service and the CSS Bulletin Board Service. This test does not verify parts a, c and e of the requirement.
NSI-0010#A	This requirement is verified through test. NSI, responsible for EOSDIS "Mission Success" network services, shall provide network connectivity to the following ECS facilities: a._ECS at the GSFC DAAC, Goddard Space Flight Center (GSFC), Greenbelt, Maryland c._System Monitoring and Coordination facility (SMC), Goddard Space Flight Center (GSFC), Greenbelt, Maryland f._ECS at the LaRC DAAC, Langley Research Center (LaRC), Hampton, Virginia The EDC DAAC must be able to transfer data with the SMC and LaRC DAAC.

Test Inputs: Valid account names and passwords for accounts at each DAAC, SMC and EOC.

Data Set Name	Data Set ID	File Name	Description	Version
TOOLKIT_001			authorized unlicensed toolkit software	
TOOLKIT_002			toolkit software upgrades	
TOOLKIT_003			toolkit documentation	
EMAIL_001			Sample E-mail message	
EMAIL_002			Sample E-mail attachment	

Step-By-Step Procedures		
Step No.	**Input Action / Expected Results**	**Pass / Fail / Comments**
10	Computer Operator: Access Communications Server and invoke E-mail client.	
20	Computer Operator: Create a new message. Specify E-mail address at SMC. Specify subject and body of message to be sent to SMC. Attach text and binary files to the message. Send the message to SMC.	
30	Computer Operator: View EDC E-mail logs to verify transmission of the e-mail message.	
40	Expected Results: System logs reflect transmission of the e-mail message.	
60	SMC Computer Operator: Views the e-mail. The message is inspected for evidence of transmission errors.	
70	Expected Results: The message transmission does not contain any evidence of transmission errors, such as garbled text.	
80	SMCC Computer Operator: Creates a reply message specifying E-mail address at EDC DAAC as well as the subject and body of message. Send the message to EDC DAAC.	
90	Computer Operator: Opens reply message verifying receipt of reply message. Print and delete message.	
100	Expected Results: The hardcopy is available from the printer. The message no longer resides in the In box.	
Data Reduction and Analysis Steps:		
Signature:		**Date:**

This scenario is not applicable for the EDC Volume of the Acceptance Test Procedures document for Release A.

8.2 Scheduling Scenario

This scenario is not applicable to the ECS System Acceptance Test Procedures - Volume 5 EDC Procedures (411/VE1).

8.3 ECS Site Upgrade Scenario

This scenario traces the steps taken by the M&O staff in the process of implementing changes to the ECS site environment. It carries the maintenance personnel through established procedures for system upgrades and enhancements.

The purpose of this scenario is to provide confirmation of the SMC's, each site's, and the total system's ability to successfully evolve through installation of minor enhancements and major upgrades. ECS overall and site capability for ascertaining the validity and assessing impacts of requested modifications is inspected.

8.3.1 Enhancements Sequence

This sequence conducts the AT reviewers through ECS site procedures for coordinating site enhancements with the ECS systems level team. ECS site policy and procedures are inspected to evaluate in-site enhancement policies. Analysis is performed to provide evidence that proper coordination actions with SMC takes place that update SMC retained site architecture's procedures to reflect the newly installed enhancement. Site procedures are reviewed for assurance that integrated system-level enhancement related policies and procedures are in force within ECS sites.

LSM procedures for receiving monitoring and reporting on SMC originated site enhancements are assessed. LSM procedures and activities for coordinating with site management and monitoring site implementation team enhancement activities, to confirm appropriate use of integrated toolkits and standard user interfaces are evaluated.

Configuration: The subsystem needed to perform this sequence of tests are as follows. CSS/MSS, INS & ISS.

External Interfaces: The external interfaces (i.e. other ECS sites and data sources) needed for this sequence (both real and simulated) are listed:

SMC

LaRC ECS DAAC

Operator Position(s): The operator positions from the ECS Maintenance and Operations Position Descriptions document (607/OP2) needed to support this sequence are listed:

DAAC User Services Representative

Screening Committee

SMC CM Administrator

SEO

GSFC Site CCB

(includes DAAC Operations Supervisor, DAAC Resource Manager, et al)

Operational Scenario(s): The operations scenario, taken from the Operations Scenarios for the ECS Project: Release-A document (605/OP1), that was used to develop tests in this sequence of tests are listed:

System Enhancement Scenario (Section 3.4.7)

Test Dependencies: There are no test dependencies needed for this sequence of tests.

8.3.1.1 ECS Enhancements

TEST Procedure No.: A080320.010$E	**Date Executed:**	**Test Conductor:**

Title:	ECS Enhancements
Objective:	This test provides ECS software, hardware and general managers with assurance that the GSFC DAAC has satisfactory software enhancement procedures in place. Each applicable written policy, procedures and as-built architecture specifications for managing and performing system enhancements are required inputs for this test case. Procedures are inspected for satisfactory life cycle coverage of enhancement initiation, implementation, and installation. Enhancement configuration management procedures are inspected and compared with enhancement procedures for specification of timely reviews and baseline updates that assure the site's ability to update and retain configuration status.

Requirements	Acceptance Criteria
SMC-2535#A	This requirement is verified through demonstration. Upon approval of an enhancement, the LSM must facilitate the implementation of the approved changes within an elements hardware and software. During the test, LSM must assist in installing the software enhancement from the SMC. **Change verification method from analysis to demonstration.**

Test Inputs:

Data Set Name	Data Set ID	File Name	Description	Version
SW_001			S/W enhancement file	
CCR_001			CCR	

Step-By-Step Procedures		
Step No.	**Input Action / Expected Results**	**Pass / Fail / Comments**
10	User Services Representative: Accesses URDB to submit an enhancement recommendation for one of the ECS custom toolkits.	
20	Expected Results: URDB input screen is displayed on the screen.	
30	User Services Representative: Enters his/her name, e-mail address, phone number, agency's name, recommendation title, and the recommendation.	
40	Expected Results: The system provides an ID number for future reference to this recommendation.	
50	Screening Committee: Accesses the URDB.	
60	Expected Results: URDB displays the enhancement recommendation.	
70	Screening Committee: Reviews the enhancement recommendation, determines that the recommendation has merit, has system-wide impact, and should be submitted via a configuration change request (CCR) to ESDIS CCB for approval. Screening Committee Member (SCM): Changes status of recommendation to reflect its consideration for implementation.	
80	Expected Result: URDB stores the status update.	
90	SCM: Executes DDTS to compose the CCR.	
100	Expected Results: The DDTS displays on the screen.	
110	SCM: Clicks the "Submit" button to bring up the CCR input screen.	
120	Expected Results: The DDTS displays the CCR input screen.	
130	SCM: Enters the class and project name for the CCR.	
140	Expected Results: The DDTS accepts the input and displays the CCR form.	
150	SCM: Enters the name of the toolkit, version number, descriptive title for the CCR, recommended priority, recommendation (includes references to the URDB ID number) on the form and then clicks the "Commit" button.	

160	Expected Results: The DDTS stores the CCR information in its data base, sets an initial state (new), and sends e-mail notification of its existence to the SMC CM Administrator and the SEO.	
170	SEO Staff Member (SM): Receives e-mail notification and accesses DDTS.	
180	Expected Results: DDTS displays the CCR.	
190	SM: Reviews the CCR ad prints it to a designated file.	
200	Expected Results: DDTS prints a copy of the CCR to a designated file.	
210	SM: Executes e-mail.	
220	Expected Results: E-mail is displayed on the screen.	
230	SM: Composes a message attaching a copy of the CCR addressed to each site's SE for an impact assessment and sends the message.	
240	Expected Results: E-mail facility transmits the message with the attached CCR file to each site and notifies the recipients that they have mail.	
250	Site SE: Executes e-mail.	
260	Expected Results: E-mail is displayed on the screen.	
270	Site SE: Opens and assesses the message and attached CCR. Creates a forwarded message addressed to the site CM Administrator, the message contains assessment information such as the purpose of the assessment, name of requesting agency, impact to site resources, benefits to site, recommendation, and a copy of the CCR. Sends the message.	
280	Expected Results: E-mail facility transmits the message with the attached CCR file to the Site CM Administrator and notifies the recipient that he/she has mail.	
290	Site CM Administrator: Executes e-mail.	
300	Expected Results: E-mail is displayed on the screen.	
310	Site CM Administrator: Opens and assesses the message and attached CCR and forwards a message addressed to the site CCB for review and approval. Sends the message.	
320	Expected Results: E-mail facility transmits the message with the attached CCR file to the Site CCB and notifies the recipient that he/she has mail.	

330	Site CCB: Executes e-mail.	
340	Expected Results: E-mail is displayed on the screen.	
350	Site CCB: Opens, reviews and approves the assessment.	
360	Site SE: E-mails site assessment to the SEO.	
370	Expected Results: E-mail facility transmits assessment to SEO and notifies the recipient.	
380	SEO SM: Executes e-mail.	
390	Expected Results: E-mail is displayed on the screen.	
400	SEO SM: Opens and reads the sites' assessments.	
410	Expected Result: Assessment appears on the screen.	
420	SEO SM: Accesses DDTS.	
430	Expected Results: DDTS appears on the screen.	
440	SEO SM: Selects the CCR in the index.	
450	Expected Results: The CCR appears on the screen.	
460	SEO SM: Clicks the "Modify" button and then selects the "Add Enclosure" option.	
470	Expected Results: The "Add Enclosure" window appears.	
480	SEO SM: Enters the summary of the impact assessments, cost estimates, and recommendation. Then, executes the editor's File Menu's save option and enters an enclosure title.	
490	Expected Results: DDTS saves the information under the entered enclosure title.	
500	SEO SM: Uses the "Add Enclosure" feature to insert each of the sites' assessment file into an enclosure and names each site's assessment enclosure accordingly.	
510	Expected Results: DDTS saves the content of each file under the entered enclosure title. DDTS sends e-mail notification of the update to the CCR originator, the URDB SCM	
520	SEO SM: Selects the "File" menu then selects "print."	
530	Expected Results: DDTS prints the CCR.	
540	SEO SM: Sends a card copy of the CCR to the ESDIS CCB for review and approval.	
550	ESDIS CCB: Reviews and approves the CCR and issues implementation instructions.	
560	SMC CM Administrator: Accesses URDB.	
570	Expected Results: the URDB is displayed.	

580	SMC CM Administrator: Updates the recommendation record to reflect ESDIS CCB's decision.	
590	Expected Results: URDB stores the information.	
Data Reduction and Analysis Steps:		
Signature:		**Date:**

8.4 Configuration Management Scenario

This scenario conducts the site operations staff through the ECS capability for performing system-level configuration management. Resource management procedures are evaluated for effective, complete and prompt coordination and movement between ECS sites, of resources, and resource related procedures and permissions, such as operational directives and COTS software usage licenses and unlicensed toolkits. The logistics management activities are assessed for their combined ability to monitor and communicate information concerning spares and consumable inventories and replenishment.

The completeness, effectiveness and the degree of comprehensives of the ECS capability for controlling and maintaining system-wide inventories including evaluation of previous or on-going inventory procedures is assessed. ECS system-level quality management is evaluated for its ability to assess overall ECS performance within the SMC, for effective SMC/LSM coordination, and for satisfactory LSM quality assurance procedures. The ECS capability for collecting controlling, maintaining and distributing ECS system-level policies and procedures is evaluated as well as the capability of providing, maintaining. and updating a bulletin board service for publishing current ECS status, events, news and toolkit references and updates. AT configuration management evaluations include assessment of the ECS network management capability for providing control of network configuration parameters and resources.

8.4.1 Resource Management Sequence

This sequence conducts the testers through ECS resource management activities for providing system-level information, equipment and software resources to the EDC site. The site management and operations team demonstrates the SMC capability to generate and send ground operations events to sites for implementation, as well as the LSM capability for conveying, monitoring and reporting to the SMC on the status and progress of the implementation of these activities. The SMC procedures for making available system-level toolkits for automated distribution to the EDC site is also inspected, including procedures for distributing unlicensed toolkit components, licenses for commercial products, product upgrades and user/maintenance documentation.

Configuration: The subsystem needed to perform this sequence of tests are as follows. CSS/MSS, INS & ISS.

External Interfaces: The external interfaces (i.e. other ECS sites and data sources) needed for this sequence (both real and simulated) are listed:

SMC

Operator Position(s): The operator positions from the ECS Maintenance and Operations Position Descriptions document (607/OP2) needed to support this sequence are listed:

DAAC Operations Supervisor

DAAC Production Monitor

DAAC Computer Operator

Operational Scenario(s): The operations scenarios, taken from the Operations Scenarios for the ECS Project: Release-A document (605/OP1), that were used to develop tests in this sequence of tests are listed:

Resource Planning Scenario (section 3.7)

Resource Management and Control Scenario (section 3.8)

Test Dependencies: The following table identifies the test procedure(s) in a sequence of tests that should be run prior to or concurrently with a sequence or test procedure.

Test Procedure No.	Site/Procedure No.	Comments
A080410.010$E	A080410.010$S	prior

8.4.1.1 Resource Management Directive

TEST Procedure No.: A080410.010$E	**Date Executed:**	**Test Conductor:**
Title:	Resource Management Directive	
Objective:	This test case investigates the SMC M&O staff's ability to generate managerial and operational directives, such as directives involving operational status, resource allocation and upgrade to the sites' LSM M&O procedures.	

Requirements	Acceptance Criteria
EOSD2660#A	This requirement is verified through demonstration. ECS elements shall at all times maintain and comply with the security directives issued by the SMC. The Tester demonstrates that the system provides the capability to view a security directive that was previously transmitted and stored in the database from the SMC.

SMC-2115#A	This requirement is verified through demonstration. The LSM shall convey for EDC implementation, the managerial and operational directives regarding the allocation or upgrade of any hardware and scientific and systems software. The Tester demonstrates that the system provides the capability to display a policy, procedure, or directive that was previously transmitted and stored in the database from the SMC.

Test Inputs:

Data Set Name	Data Set ID	File Name	Description	Version
Resource Directives			Hard/soft copies	

Step-By-Step Procedures		
Step No.	**Input Action / Expected Results**	**Pass / Fail / Comments**
10	DAAC Computer Operator: Logon to a workstation at the EDC DAAC. The office automation tools must be available on the workstation.	
20	DAAC Computer Operator: Select the tools option from the menu.	
30	Expected Results: The tools menu is displayed.	
40	DAAC Computer Operator: Select the option for office automation.	
50	Expected Results: The office automation menu is displayed.	
60	DAAC Computer Operator: Select the option for GhostView and follow directions to view a document.	
70	note: To view a policy, procedure, or directive that was previously transmitted and stored in the database from the SMC. DAAC Computer Operator: Choose open under the file button and select the desired file to view.	
80	Expected Results: The selected file is displayed.	
90	DAAC Computer Operator: Select the print button.	
100	Expected Results: The selected file is printed.	
110	DAAC Computer Operator: Select close to close the desired file.	
120	DAAC Computer Operator: Select quit to exit the processor.	
130	Expected Results: The MSWindows Program Manager appears.	
140	note: To view the DAAC files for operational status, resource allocations, or any system upgrades. DAAC Computer Operator: Select the MSWindows option from under the Office Automation option.	
150	Expected Results: The MSWindows' Program Manager is displayed.	
160	DAAC Computer Operator: Select the file button.	
170	Expected Results: The file menu is displayed under a disk drive.	
180	DAAC Computer Operator: Select the correct disk drive and the file in either Microsoft Word or Excel format and select the open button to view the document.	
190	Expected Results: The document is displayed.	
200	DAAC Computer Operator: Select print to print the document if desired.	
210	DAAC Computer Operator: Insert or delete changes into the desired file, then select save.	
220	Expected Results: The changes are saved in the document.	

230	DAAC Computer Operator: To exit the processor select quit.	
240	Expected Results: The MSWindows program manager appears.	
250	DAAC Computer Operator: To end this test exit Windows.	
260	Expected Results: The SSIT Manger-Operator View is displayed.	

Data Reduction and Analysis Steps:

After the information from EDC has been entered into the Training database the following steps occur:

A. The SMC uses the information to assist in planning activities for scheduling dates of training courses, developing training courses, scheduling training resources (system equipment, software, and scheduling personnel to support training.

B. The training database is updated with scheduling information.

C. This information is disseminated to EDC via the ECS training bulletin board as the proposed training schedule.

D. After review and consideration by EDC, the SMC finalizes the training course schedule and makes it available via the ECS training bulletin board.

E. Training registration is done by Email. A confirmation of all training registration applications is transferred via Email.

Signature:	**Date:**

8.4.1.2 Sufficient Storage

TEST Procedure No.: A080410.040$E	**Date Executed:**	**Test Conductor:**
Title: Sufficient Storage		
Objective: This test confirms the capability of ECS to provide sufficient storage for the Client subsystem, Sustaining Engineering, and IV&V.		

Requirements	**Acceptance Criteria**
EOSD1140#A	This requirement is verified through analysis. ECS shall allocate 10% of development resources (the ECS Sustaining Engineering Facility at EDC), including processing, storage, and networks, for the IV&V activity. Analytic and static analysis models along with daily performance reports are used to verify this requirement.
IMS-1790#A	This requirement is verified through analysis. The IMS shall provide, based upon the data model defined in Appendix C, sufficient storage for, at a minimum: a. Directory metadata b. Guide (documentation/reference material) metadata c. Inventory metadata d. System space, LSM data, and data base system overhead e. Metadata staging area f. Spacecraft housekeeping and ancillary data metadata g. Science processing library software metadata h. Summary data statistics i. User workspace This requirement is verified at the end of each day using log files and accounting report.
Test Inputs: There are no input data sets for this test procedure**.**	

Step-By-Step Procedures		
Step No.	**Input Action / Expected Results**	**Pass / Fail / Comments**
	There are no step-by-step procedures.	
Data Reduction and Analysis Steps: A. Analytic and static analysis models along with daily performance reports from the Release A DAACs and EBnet will be used to verify the design of SMC to accommodate 100 percent growth in processing speed. B. Static analysis models along with daily performance reports from the Release A DAACs and EBnet will be used to verify the design of SMC to accommodate 100 percent growth in storage capacity. Performance reports from the Release A DAACs and EBnet are used for DAACs site and network trend analysis. The Tivoli and Openview tools are used at the SMC to determine resources impact.		
Signature:		**Date:**

8.4.2 Maintenance Management Sequence

This sequence is not applicable for the EDC ECS DAAC Volume of the Acceptance Test Procedures document for Release A.

8.4.3 Logistics Management Sequence

This sequence reviews ECS capabilities for managing system-level logistics management activities and for managing system-level personnel and resources in logistics control activities. The AT team inspects SMC's procedures for developing and updating a system-level logistics management database containing historical, current and planned logistics commitments. The EDC policies and procedures are inspected for the existence and completeness of procedures for receiving logistics management directives and for monitoring, status and reporting to SMC on EDC activities in response to logistics related directives.

Configuration: The subsystem needed to perform this sequence of tests are as follows. CSS/MSS, INS & ISS.

External Interfaces: The external interfaces (i.e. other ECS sites and data sources) needed for this sequence (both real and simulated) are listed:

SMC

Operator Position(s): The operator positions from the ECS Maintenance and Operations Position Descriptions document (607/OP2) needed to support this sequence are listed:

DAAC Operations Supervisor

DAAC Resource Manager

DAAC Computer Operator

Operational Scenario(s): There are no operations scenarios taken from the Operations Scenarios for the ECS Project: Release-A document (605/OP1), used during this sequence of tests.

Test Dependencies: There are no test dependencies needed for this sequence of tests.

8.4.3.1 Logistics Monitoring

TEST Procedure No.: A080430.010$E	**Date Executed:**	**Test Conductor:**
Title: Logistic Monitoring		
Objective: This test case verifies that the LSM has the capability to monitor the spares and consumables inventory.		

Requirements	**Acceptance Criteria**
SMC-2305#A	This requirement is verified through demonstration. The LSM shall monitor the spares inventory within its element. The Tester demonstrates that the system provides the capability to use the LSM logistics monitoring procedure information, track the location, quantity, status, and consumption rate concerning spares and consumables.
SMC-2325#A	This requirement is verified through demonstration. The LSM shall monitor the consumable inventory within its element for items used by the system including, at a minimum: a. Computer tapes b. Computer disks c. Computer paper The Tester demonstrates that the system provides the capability to manually input the required list of consumables and a spare part to be displayed (computer tapes, disks, and paper), and record the quantity and status of three consumable items (computer tapes, computer disks, and computer paper) as contained in the data base.

Test Inputs: Lists of inventory for spares and consumables such as, computer tapes, disks, and paper.

Data Set Name	**Data Set ID**	**File Name**	**Description**	**Version**

Step-By-Step Procedures		
Step No.	**Input Action / Expected Results**	**Pass / Fail / Comments**
10	DAAC Computer Operator: Login to ECS	
20	DAAC Computer Operator: Open the Inventory file management directory.	
30	Expected Result: Inventory file is ready for access.	
40	DAAC Operations Supervisor: Using the LSM logistics monitoring procedure information, track the location, quantity, status, and consumption rate concerning spares and consumables.	
50	DAAC Operations Supervisor: Manually input the required list of consumables and spare part to be displayed (computer tapes, disks, and paper). Record the quantity and status of three consumable items (computer tapes, computer disks, and computer paper) as contained in the data base.	
60	Expected Result: All required characteristics for running the query is recorded and processed.	
70	DAAC Computer Operator: A physical inspection of the inventory is made at the site to obtain the actual quantity and status of the three consumable items.	
80	Expected Result: The inventory list of the computer consumables and spare part is the same as the result of the physical inspection.	
90	DAAC Computer Operator: Compare the computer generated inventory list with the test input supplied list.	
100	Expected Result: There is no discrepancies between the data base information and the quantity and status of consumable items and spare parts actually available at the site.	
110	DAAC Computer Operator: Record any missing inventory or discrepancy in the evaluation report. The lists should compare.	
120	Expected Result: The lists compare.	
Data Reduction and Analysis Steps:		
Signature:		**Date:**

8.4.3.2 Logistics Replenishment

TEST Procedure No.: A080430.020$E	**Date Executed:**	**Test Conductor:**
Title: Logistics Replenishment		
Objective: This test case verifies that the LSM has the capability to manage, replenishment of spare parts and consumable items.		

Requirements	**Acceptance Criteria**
SMC-2315#A	This requirement is verified through demonstration. The LSM shall manage the replenishment of spare parts within its element. The Tester demonstrates that the system provides the capability to replenish spare parts and consumable items.
SMC-2335#A	This requirement is verified through demonstration. The LSM shall manage the replenishment of consumable items for its element. The Tester demonstrates that the system provides the capability to replenish spare parts and consumable items.

Test Inputs: Lists of inventory for spares and consumables such as, computer tapes, disks, and paper.

Data Set Name	**Data Set ID**	**File Name**	**Description**	**Version**

Step-By-Step Procedures		
Step No.	**Input Action / Expected Results**	**Pass / Fail / Comments**
10	DAAC Operations Supervisor: Review the procedures for overseeing and managing, respectively, the replenishment of spare parts and consumable items.	
20	DAAC Computer Operator: Login to ECS.	
30	DAAC Computer Operator: Open the Inventory file management directory.	
40	Expected Result: Inventory file is ready for access.	
50	DAAC Computer Operator: Bring up the data base and change the current quantities of consumable items accordingly.	
60	DAAC Computer Operator: Manually input the required list of consumables and spare part to be displayed (computer tapes, disks, and paper).	
70	Expected Result: All required characteristics for running the query is recorded and processed.	
80	DAAC Computer Operator: List the consumables and spare part.	
90	Expected Result: The inventory list of the computer consumables and spare part is displayed.	
100	DAAC Computer Operator: Check consumable and spare part list for shortfalls.	
110	Expected Result: If a shortfall exists an alert or warning message will be generated and displayed. No shortfalls should exist.	
120	DAAC Computer Operator: Order any shortfall item.	
130	Expected Result: Change in the data base to indicate the items have been ordered.	
140	DAAC Computer Operator: Record any discrepancy in the new inventory list.	
Data Reduction and Analysis Steps:		
Signature:		**Date:**

8.4.4 Training Management Sequence

This sequence provides the methodology for the inspection of ECS capabilities for managing system-level training and for supplying system-level personnel and courseware in performing on-site courses. It inspects the established database architecture to confirm the SMC's ability for developing and updating a system-level training management information base containing historical, current and planned schedules courseware availability, training commitments and budgets pertaining to system training activities. The SMC training policy and procedures are inspected for specification of management activities for providing system-level assistance in managing site training. The procedures, at EDC, are inspected for the existence and completeness of procedures for receiving training management directives and for monitoring, status and

reporting to SMC on site activities in response to SMC originated training directives. The SMC training policies and procedures are inspected for specification of specific assistance activities in assisting and providing system-level skills and resources to assist in site-level training and courseware development, including personnel skills, multi-site training tools and system-level training courseware toolkits. The procedures, at EDC, are inspected for the existence and completeness of procedures for applying available SMC training resources within their assigned facilities. SMC procedures for monitoring and evaluating training course conduct and training effectiveness at the system and site levels are inspected.

Configuration: The subsystem needed to perform this sequence of tests are as follows. CSS/MSS, INS & ISS.

External Interfaces: The external interfaces (i.e. other ECS sites and data sources) needed for this sequence (both real and simulated) are listed :

SMC

Operator Position(s): The operator positions from the ECS Maintenance and Operations Position Descriptions document (607/OP2) needed to support this sequence are listed:

DAAC Operations Supervisor

DAAC Resource Manager

DAAC Computer Operator

Operational Scenario(s): There are no operations scenarios taken from the Operations Scenarios for the ECS Project: Release-A, document that was used to develop tests in this sequence of tests.

Test Dependencies: The following table identifies the test procedure(s) in a sequence of tests that should be run prior to or concurrently with a sequence or test procedure.

Test Procedure No.	Site/Procedure No.	Comments
A080640.030$E	A080640.030$S	concurrent

8.4.4.1 ECS Training and Certification Program Management

TEST Procedure No.: A080440.010$E	**Date Executed:**	**Test Conductor:**
Title:	ECS Training and Certification Program Management	
Objective:	The Training and Certification Program Management test verifies that the ECS SMC training facility develops plans for conducting training courses.	

Requirements	Acceptance Criteria
SMC-2405#A	This requirement is verified through analysis. The LSM shall coordinate with the SMC in managing the training program for its element. The OA tools assists the SMC training staff in determining training requirements for various operator positions, tracking resources for training, and maintaining training course information. The OA tools support the management of training and certification programs for the ECS. Manually performed by M&O staff using phone, e-mail, or through access to site's training planning documents.
SMC-2415#A	This requirement is verified through analysis. The LSM shall receive from the SMC descriptions and schedules for training courses. Using the Training database, the SMC training staff uses the information to assist in the following planning activities: scheduling dates of training courses, developing training courses, scheduling training resources (system equipment, software, instructional materials), and scheduling personnel to support training. The ECS training database is updated with all of the scheduling information and formatted into a Training Schedule Report. This report is disseminated to the ECS site managers via the ECS training bulletin board as the proposed training schedule. Manually performed by M&O staff using e-mail and remote access to office automation tools.

Test Inputs: Written plans for conducting training and certification programs for the ECS.
Training database.

Data Set Name	Data Set ID	File Name	Description	Version

Step-By-Step Procedures		
Step No.	**Input Action / Expected Results**	**Pass / Fail / Comments**
10	DAAC Resource Manager: Review the procedures for the overseeing and managing of training and certification programs for ECS.	
20	Expected Result: The procedures determining training requirements for various operator positions, tracking resources for training, and maintaining training course information are reviewed.	
30	DAAC Computer Operator: Login to ECS.	
40	DAAC Computer Operator: Open the file from the SMC containing plans for conducting training and certification programs for ECS..	
50	Expected Result: File open and ready for access.	
60	DAAC Resource Manager: Using the site information on the personnel training needs, the number of people requiring training, and unique training requirements. Query the database for the purpose of scheduling a training course.	
70	Expected Result: Information is collected from the training database.	
80	DAAC Resource Manager: Schedule a training course from the SMC.	
90	Expected Result: The SMC training staff contacts the site DAAC Resource Manager, via Email, to obtain information on the personnel training needs, and the number of people requiring training.	
100	SMC Training Staff: Using the Training database, the information is accessed in the following planning activities: scheduling dates of training courses, developing training courses, scheduling training resources (system equipment, software, instructional materials), and scheduling personnel to support training.	
110	Expected Result: A training course is scheduled.	
120	SMC: The training database is updated with all of the scheduling information and formatted into a Training Schedule Report.	
130	Expected Result: The training schedule report is disseminated to the DAAC Resource Manager via the ECS training bulletin board as the proposed training schedule.	

140	Expected Result: Training registration for the course is done by Email. A confirmation of the training registration application is transferred via Email.	
Data Reduction and Analysis Steps:		
Signature:		**Date:**

8.4.4.2 On-the-Job Training

This test procedure is not applicable for the EDC Volume of the Acceptance Test Procedures document for Release A.

8.4.5 Inventory Management Sequence

This sequence provides the methodology for test inspection of ECS capabilities for providing and maintaining a configuration management (CM) system, maintaining inventory data bases, managing system-level inventory policy and procedures, and participating and contributing system-level skills and resources in performing site-level inventory activities. The tester inspects the SMC's procedures and policy for planning, establishing and maintaining a system-wide inventory of all hardware, science software, system software, and associated documentation within ECS.

Configuration : The subsystem needed to perform this sequence of tests are as follows. CSS/MSS, INS & ISS.

External Interfaces: The external interfaces (i.e. other ECS sites and data sources) needed for this sequence (both real and simulated) are listed :

SMC

Operator Position(s): The operator positions from the ECS Maintenance and Operations Position Descriptions document (607/OP2) needed to support this sequence are listed:

DAAC Operations Supervisor

DAAC Resource Manager

DAAC Computer Operator

Operational Scenario(s): The operations scenarios, taken from the Operations Scenarios for the ECS Project: Release-A document (605/OP1) that were used to develop tests in this sequence of tests are listed:

Configuration Management Scenario (Section 3.4)

Test Dependencies: There are no test dependencies needed for this sequence of tests.

8.4.5.1 Inventory and Configuration Management

TEST Procedure No.: A080450.010$E	**Date Executed:**	**Test Conductor:**

Title:	Inventory and Configuration Management
Objective	To verify that the LSM can establish and maintain a system-wide inventory data base of hardware, system software, and science software and provide a system-wide configuration management (CM) capability.

Requirements	Acceptance Criteria
DADS1850#A	This requirement is verified through demonstration. Each DADS shall utilize the configuration management toolkit provided by the SMC. The Tester shows that the system provides the capability for utilizing the configuration management toolkit provided by the SMC.
DADS1860#A	This requirement is verified through demonstration. Each DADS shall, in conjunction with the SMC, provide configuration management for its internal resources. The Tester shows that the system provides the capability for configuration management of its internal resources.
IMS-1380#A	This requirement is verified through test. The IMS shall provide the capability to integrate the element toolkits with a common user interface. The Tester tests that the system provides the capability to integrate the element toolkits with a common user interface.
SMC-2515#A	This requirement is verified through test. The LSM shall provide configuration management for at least the operational hardware, system software, and scientific software within its element and for the migration of enhancements into the operational system. The Tester tests that the system provides the capability for maintaining the inventory of hardware, science software, and system software on a system-wide basis.

Test Inputs:	System inventory data base file of all the hardware, scientific and system software contained in the ECS.

Data Set Name	Data Set ID	File Name	Description	Version

Step-By-Step Procedures		
Step No.	**Input Action / Expected Results**	**Pass / Fail / Comments**
10	DAAC Operations Supervisor: Review the element and configuration management toolkits and the documentation for maintaining the inventory of hardware, science software, and system software on a system-wide basis.	
20	DAAC Computer Operator: Log onto a workstation.	
30	Expected Results: Successful login.	
40	DAAC Computer Operator: Bring up and access the data base, which contains CM information .	
50	DAAC Computer Operator: Check for the established SMC created inventory and configuration management files, using the Clearcase tool.	
60	Expected Result: The files will be identified and located for input/output.	
70	DAAC Computer Operator: Select data base information containing one hardware item .	
80	DAAC Computer Operator: Print the inventory log file information for the one hardware item that contains the, hardware ID numbers, version numbers and dates, manufacturer, part number, and serial number.	
90	Expected Result: The inventory file will be printed.	
100	DAAC Computer Operator: Inspect the identification numbers, manufacturer, part number, and serial number of the actual hardware item and record this information.	
120	Expected Result: The data base information compares with results of the hardware inspection. There should be no discrepancies between the information contained in the data base and the actual items selected for inspection.	
130	DAAC Computer Operator: Select data base information containing one software item .	
140	DAAC Computer Operator: Print the inventory log file information for the one software item that contains the, version numbers and dates, name and locator information for software maintenance, and the location where the software is used.	
150	Expected Result: The inventory file will be printed.	
160	DAAC Computer Operator: Inspect the version numbers and dates, name and locator information for software maintenance, and the location where the software is used.	
170	Expected Result: The data base information compares with results of the software inspection. There should be no discrepancies between the information contained in the data base and the actual item selected for inspection.	
Data Reduction and Analysis Steps:		
Signature:		**Date:**

8.4.5.2 LSM Enhancement Migration and Inventory Management

TEST Procedure No.: A080450.030$E	**Date Executed:**	**Test Conductor:**
Title:	LSM Enhancement Migration and Inventory Management	
Objective:	To verify the capability of the LSM to update the system-wide inventory data base and provide CM for the migration of upgrades and enhancements into the operational system for site-specific items.	

Requirements	**Acceptance Criteria**
SMC-2505#A	This requirement is verified through demonstration. The LSM shall update the system-wide inventory data base consisting of all hardware, system software, and scientific software contained within its element. The Tester demonstrates that the system provides the capability for updating the inventory data base for hardware and system and science software.

Test Inputs: Inventory data base file containing operational system upgrades and enhancements. System must have a configuration management capability in place.

Data Set Name	**Data Set ID**	**File Name**	**Description**	**Version**

Step-By-Step Procedures		
Step No.	**Input Action / Expected Results**	**Pass / Fail / Comments**
10	DAAC Operations Supervisor: Review the documentation for updating the inventory data base for hardware and system and science software.	
20	DAAC Operations Supervisor: Use this information to update the data base containing CM information for hardware.	
30	DAAC Computer Operator: Log onto a workstation.	
40	Expected Results: Successful login.	
50	DAAC Operations Supervisor r: Check for the establishment of inventory and configuration management files, using the Clearcase tool load the inventory file.	
60	Expected Result: Inventory file will be loaded and ready for input/output.	
70	DAAC Computer Operator: Retrieve data base information about one specified hardware item .	
80	Expected Result: The identification number, manufacturer, part number, and serial number of the hardware item should be displayed.	
90	DAAC Operations Supervisor: Identify the hardware item to be replaced and provide the ID number, manufacturer, part number, and serial number of the new H/W item. Make the file change.	
100	Expected Result: The original H/W item will be replaced with the new one. This new H/W configuration will be reflected in the inventory data base with the identification number, manufacturer, part number, and serial number of the new hardware item.	
110	DAAC Operations Supervisor: Close out the inventory file.	
120	Expected Result: File will be closed.	
130	DAAC Computer Operator: Using Clearcase, load the CM file containing information about the system and science software data base.	
140	Expected Result: The S/W data base file is opened for I/O operations.	
150	DAAC Computer Operator: Print information for a selected processor from the system and science software data base file, which contains at a minimum the processor name, version, and maintenance performed.	
160	Expected Result: The selected processor information including processor name, version, and maintenance performed is printed.	
170	DAAC Operations Supervisor: Identify the software processor to be replaced and provide the processor name, version, and maintenance performed of the new S/W processor. Make the file change.	

180	Expected Result: The original software processor is replaced with the new one. This new S/W configuration will be reflected in the inventory data base with the processor name, version, and maintenance performed of the new software processor.	
190	DAAC Operations Supervisor: Inspect and compare the printed output with the current software configuration and record any discrepancies. There should not be any discrepancies.	
191	DAAC Operations Supervisor: Reset all data base items to there original values.	
200	Tester: Close the data base file.	
210	DAAC Computer Operator: Log off of the work station.	
Data Reduction and Analysis Steps:		
Signature:		**Date:**

8.4.5.3 SMC Enhancement Evaluation & Implementation Management

This test procedure is not applicable for the EDC Volume of the Acceptance Test Procedures document for Release A.

8.4.6 Quality Management Sequence

This sequence illustrates to the tester ECS capabilities for establishing and maintaining quality assurance management data bases, for managing system-level quality assurance policy and procedures and for system-level quality assurance for overall ECS performance as well as for specific programmatic areas. The tester also inspects EDC's procedures to confirm their ability to perform quality assurance for the site, such as site quality testing, benchmarks, audits of site enhancement implementations, site quality checking, processed and delivered quality checks and quality evaluations of site resource usage performance.

Configuration: The subsystem needed to perform this sequence of tests are as follows. CSS/MSS, INS & ISS.

External Interfaces: The external interfaces (i.e. other ECS sites and data sources) needed for this sequence (both real and simulated) are listed :

SMC

Operator Position(s): The operator positions from the ECS Maintenance and Operations Position Descriptions document (607/OP2) needed to support this sequence are listed:

DAAC Operations Supervisor

DAAC Production Monitor

DAAC Computer Operator

DAAC Science Data Specialist

Operational Scenario(s): The operations scenarios, taken from the Operations Scenarios for the ECS Project: Release-A document (605/OP1), that were used to develop tests in this sequence of tests are listed:

Performance Management Scenario (Section 3.5)

Test Dependencies: There are no test dependencies needed for this sequence of tests.

8.4.6.1 SMC Quality Assurance

This test procedure is not applicable for the EDC Volume of the Acceptance Test Procedures document for Release A.

8.4.6.2 LSM Quality Assurance

TEST Procedure No.: A080460.020$E	**Date Executed:**	**Test Conductor:**
Title: LSM Quality Assurance		
Objective: To verify that the LSM has the capability to perform quality assurance (QA) activities.		

Requirements	**Acceptance Criteria**
SMC-3345#A	This requirement is verified through demonstration. The LSM must perform quality assurance for its site/elements performance as well as programmatic areas that includes, at a minimum: a. Quality testing, benchmarks and audits for element enhancement implementations. b. Quality checking and audits of products processed and delivered. c. Quality testing and audits of element resource performance. The Tester demonstrates that the system provides the capability for performing site-specific quality assurance, and that it has policies and procedures to ensure that quality testing, benchmarks and audits for site-specific enhancement implementations can be successfully accomplished, and that the quality testing and audits of DAAC resource performance can be performed.

Test Inputs: Data base file containing quality assurance information about system quality testing, benchmarks and audits.

The availability of performance management tools.

Data Set Name	**Data Set ID**	**File Name**	**Description**	**Version**
MET_001			Metadata	
QA_001			Quality Assurance	

Step-By-Step Procedures		
Step No.	**Input Action / Expected Results**	**Pass / Fail / Comments**
10	Data Specialist: Review the documentation for performing site-specific quality assurance and inspect policies and procedures to ensure that quality testing, benchmarks and audits for site-specific enhancement implementations can be successfully accomplished, and that the quality testing and audits of DAAC resource performance can be performed.	
20	Expected Result: Successful inspection.	
30	Data Specialist: Log onto a workstation.	
40	Expected Results: Successful login.	
	Note: Begin product quality assurance.	
50	Data Specialist: Request a data product (metadata file of simulated ingested data).	
60	Expected Result: The data server archives the product and sends a subscription notice.	
70	Data Specialist: Receives notification of the product and retrieves it from the data server for review.	
80	Expected Result: Product is reviewed and the quality is determined.	
90	Data Specialist: Updates the product metadata QA flag and requests the data server to archive the product.	
100	Expected Result: The data server archives the product and sends a subscription notice.	
110	Data Specialist: Receives notification of a new metadata QA flag attached to the product.	
	Note: Begin quality checking and auditing of products processed and delivered.	
120	Data Specialist: Requests a product retrieval through the data server.	
130	Expected Result: The product is made available from the data server.	
140	Production Monitor (QA); Performs manual QA on the product and sends a product archive request to the data server.	
150	Expected Result: The data server archives the product and sends out a subscription notice.	
160	Production Monitor (QA): Receives the notification.	
170	Expected Result: Accept notification and decide if any further action is needed.	
	Note: Begin performance management reporting	
180	Production Monitor (QA): Query the QA data base, select and print Performance Management report items about the above metadata product.	

190	Expected Result: Printed output containing product processing parameters, such as product size, archive space, media used, number of times distributed, CPU hours, line usage, etc.	
200	Production Monitor: Evaluate the product's quality using QA policies and procedures and perform actions necessary to reflect the appropriate quality assurance code in the product metadata.	
210	Production Monitor: Compare with the quality assurance documentation, recording any discrepancies and inadequacies.	
220	Production Monitor: Logoff the workstation	
Data Reduction and Analysis Steps:		
Signature:		**Date:**

8.4.7 Policies and Procedures Management Sequence

This sequence conducts an inspection of ECS/SMC/LSM procedures and policies for supporting, controlling and maintaining ECS/site policies and procedures covering site responsibility and authority, resource management, fault recovery, testing, simulation, maintenance, logistics, performance evaluation, training, quality and product issuance, inventory management, system enhancements, finance management, and administrative actions.

Configuration: The subsystem needed to perform this sequence of tests are as follows. CSS/MSS, INS & ISS.

External Interfaces: The external interfaces (i.e. other ECS sites and data sources) needed for this sequence (both real and simulated) are listed :

SMC

Operator Position(s): The operator positions from the ECS Maintenance and Operations Position Descriptions document (607/OP2) needed to support this sequence are listed:

DAAC Operations Supervisor

DAAC Production Monitor

DAAC Computer Operator

Operational Scenario(s): The operations scenarios, taken from the Operations Scenarios for the ECS Project: Release-A document (605/OP1), that were used to develop tests in this sequence of tests are listed:

Fault Management Scenario (Section 3.3)

Test Dependencies: The following table identifies the test procedure(s) in a sequence of tests that should be run prior to or concurrently with a sequence or test procedure.

Test Procedure No.	Site/Procedure No.	Comments
A080480.020$E	A080480.020$S	prior
A080480.010$E	A080480.010$S	prior

8.4.7.1 Policies and Procedures Control

TEST Procedure No.: A080480.010$E	**Date Executed:**	**Test Conductor:**
Title:	Policies and Procedures Control	
Objective:	To verify the overall support and control of policies and procedures affecting the ECS.	

Requirements	Acceptance Criteria
EOSD2100#A	This requirement is verified through inspection. Compliance for this requirement is demonstrated in DID 214/SE1. The ECS technical security policy planning shall be comprehensive and shall cover at least the following areas: a. Applicability of the C2 Level of Trustiness as defined by the NSA b. Applicability of the C2 Object Reuse capability c. Discretionary control and monitoring of user access d. ECS communications, network access, control, and monitoring e. Computer system "virus" monitoring, detection, and remedy f. Data protection controls g. Account/privilege management and user session tailoring h. Restart/recovery i. Security audit trail generation j. Security analysis and reporting k. Risk analysis The Operations Supervisor demonstrates by inspection that the security management policies and procedures at the site provides for password management, operational security, data classification, access privileges, system hardware and software maintenance, and spare parts inventory guidelines.
EOSD2200#A	This requirement is verified through inspection. Compliance for this requirement is demonstrated in DID 214/SE1. Selection criteria meeting overall ECS security policies and system requirements shall be applied when selecting hardware. The Operations Supervisor verifies through inspection that a security section is provided within all applicable documents at the site and is current with the ECS approved documentation.

Test Inputs:	Copies of the policies and procedures affecting the ECS, such as, site authority, resource management, fault recovery, testing, simulations, maintenance, logistics, performance evaluation, training, quality and product assurance, inventory management, system enhancements, finance management, administrative actions, and security.

Step-By-Step Procedures		
Step No.	**Input Action / Expected Results**	**Pass / Fail / Comments**
10	Operations Supervisor: Confirm that the site receives system-level policies from the SMC. Verify that principal ECS operational functions at the site are provided for in the management and control of ESDIS/ECS policies and procedures.	
20	Operations Supervisor: Verify through inspection that the security management policies and procedures at the site includes password management, operational security, data classification, access privileges, system hardware and software maintenance, and spare parts inventory guidelines.	
30	Operations Supervisor: Confirms that the LSM uses methods and procedures appropriate for controlling policies and procedures as well as pertinent correspondence at the system-wide and site level, respectively.	
40	Operations Supervisor: Confirms that the policies and procedures are sufficiently expanded to provide a level of detail necessary for implementation at the site.	
50	Expected Results: Inspections and confirmations are successful. For specifics refer to DID611 and Zi014-00 Security Policy.	
60	Operations Supervisor: Verify through inspection that the ECS security policy covers the following areas, C2 level of security, communications, virus monitoring, protection controls, system restart/recovery, security audit trail generation, security analysis and reporting, and risk analysis.	
70	Expected Results: Inspection is successful. Specifics about compliance is demonstrated in DID 214/SE1.	
80	Operations Supervisor: Verify through inspection that the security section within all documents at the site are current with the ECS approved documentation.	
90	Expected Results: Inspection is successful.	
100	Operations Supervisor: Verify that backup copies of the policy and procedure manuals are maintained at a separate physical location at the site	
110	Expected Results: Verification is successful.	
Data Reduction and Analysis Steps:		
Signature:		**Date:**

8.4.7.2 Policies and Procedures Maintenance

TEST Procedure No.: A080480.020$E	**Date Executed:**	**Test Conductor:**
Title:	Policies and Procedures Maintenance	
Objective:	To verify that the LSM provides a bulletin board service with information on ECS status, events, and news so that ESDIS, SMC, and LSM policies and procedures and directives can be properly maintained and distributed. It confirms that access to updating this information is limited to specified personnel with the proper ECS responsibility and authority.	

Requirements	Acceptance Criteria
EOSD1990#A	This requirement is verified through inspection. The interpretation criteria for this requirement is as determined in the technical security planning policy activity documented in EOSD2100, and is verified in the previous procedure (A080480.010). The ECS system and elements shall employ security measures and techniques for all applicable security disciplines which are identified in the preceding documents. These documents must provide the basis for the ECS security policy. The Operations Supervisor verifies through inspection that there are security measures and techniques for all applicable security disciplines.
EOSD2100#A	This requirement is verified through inspection. The ECS technical security policy planning shall be comprehensive and shall cover at least the following areas: a. Applicability of the C2 Level of Trustiness as defined by the NSA b. Applicability of the C2 Object Reuse capability c. Discretionary control and monitoring of user access d. ECS communications, network access, control, and monitoring e. Computer system "virus" monitoring, detection, and remedy f. Data protection controls g. Account/privilege management and user session tailoring h. Restart/recovery i. Security audit trail generation j. Security analysis and reporting k. Risk analysis Verify through inspection that the security management policies and procedures at the site includes the ECS technical security policy planing.
EOSD2200#A	This requirement is verified through inspection. Selection criteria meeting overall ECS security policies and system requirements shall be applied when selecting hardware. The Tester will verify that the overall ECS security policies and system requirements are applied when selecting hardware.
SMC-2605#A	This requirement is verified through demonstration. Partial compliance is performed by the staff using various office automation, CM, and other tools. The LSM shall support the site and element in implementing ESDIS Project policies and procedures received from the SMC covering the following areas, at a minimum:

	a. Element responsibility and authority b. Resource management c. Fault recovery d. Testing e. Simulation f. Maintenance g. Logistics h. Performance evaluation i. Training j. Quality and product assurance k. Inventory management l. System enhancements m. Finance management n. Administrative actions o. Security The Operations Supervisor verifies through demonstration that the names for the policies, procedures, and directives for element responsibility and authority, resource management, fault recovery, testing, simulation, maintenance, logistics, training, inventory management, system enhancements, finance management, administrative actions, and security were received from the SMC.
SMC-2610#A	This requirement is verified through demonstration. Partial to support distribution of toolkits. The SMC shall provide and maintain a bulletin board service with information on ECS status, events, and news. The Operations Supervisor verifies through demonstration the capability of the LSM to provide, via the ECS bulletin board service, a toolkit consisting of a list of approved CASE tools and references to standards for exchanging data for science use.
SMC-4305#A	This requirement is verified through analysis. Compliance for this requirement is performed by using office automation tools. The LSM shall maintain fault management policies and procedures for its element. The Operations Supervisor verifies through analysis the capability of the system to find the policies, procedures, and directives for element responsibility and authority, resource management, fault recovery, testing, simulation, maintenance, logistics, training, inventory management, system enhancements, finance management, administrative actions, and security. Using the office automation tools, change a paragraph in the fault management directive and store the document back into the CM data base.
SMC-5305#A	This requirement is verified through analysis. In this release only partial compliance is performed using office automation tools. The LSM shall maintain security policies and procedures, including, at a minimum: a. Physical security b. Password management c. Operational security d. Data classifications e. Access/privileges

	f. Compromise mitigation The Operations Supervisor verifies through analysis the capability of the system to find the policies, procedures, and directives for physical security, password management, operational security, data classifications, access/privileges, and compromise mitigation. Using the office automation tools, change a paragraph in a security policy and store the document back into the CM data base.
Test Inputs:	Hardcopies of the ESDIS project policies and procedures which includes, element authority, resource management, fault recovery, testing, simulation, maintenance, logistics, performance evaluation, training, quality and product assurance, inventory management, system enhancements, finance management, administrative actions, and security.

Data Set Name	Data Set ID	File Name	Description	Version

Step-By-Step Procedures		
Step No.	**Input Action / Expected Results**	**Pass / Fail / Comments**
10	Operations Supervisor: Login to the system.	
20	Expected Result: Successful logon.	
30	Operations Supervisor: Obtain proper ECS authority to update policies.	
40	Expected Result: The Tester has the responsibility and authority to access and update information in policies and procedures, and directives.	
50	Operations Supervisor: Enter the QA data base directory for read/write.	
60	Expected Result: Entry to the QA system.	
70	Operations Supervisor: Query the QA data base for on line policies and procedures, and directives.	
80	Expected Result: A listing of the current policies, procedures, and directives is displayed.	
90	Operations Supervisor: From the listing find the names for the policies, procedures, and directives for performance evaluation, and quality and product assurance.	
100	Operations Supervisor: Query the policy for performance evaluation and list the policy status.	
110	Operations Supervisor: Check known status with the computer generated policy status.	
120	Expected Result: The status information compares.	
130	Operations Supervisor: Using the office automation tools display the performance evaluation policy.	
140	Expected Result: The performance evaluation policy is displayed.	
150	Operations Supervisor: Using the office automation tools, change a paragraph in the policy and store the document back into the QA data base.	
160	Expected Result: The performance evaluation policy will be updated and flagged for down loading to the SMC to replace the document maintained in the SMC data base.	
170	Operations Supervisor: Close the QA data base.	
180	Operations Supervisor: Enter the CM data base directory for read/write.	
190	Expected Result: Entry to the CM system.	
200	Operations Supervisor: Query the CM data base for on line policies and procedures, and directives.	
210	Expected Result: A listing of the current policies, procedures, and directives is displayed.	

220	Operations Supervisor: From the listing find the names for the policies, procedures, and directives for element responsibility and authority, resource management, fault recovery, testing, simulation, maintenance, logistics, training, inventory management, system enhancements, finance management, administrative actions, and security	
230	Operations Supervisor: Query the policy for performance evaluation and list the directive status for training.	
240	Operations Supervisor: Check known status with the computer generated directive status.	
250	Expected Result: The status information compares.	
260	Operations Supervisor: Using the office automation tools display the training directive.	
270	Expected Result: The training directive is displayed.	
280	Operations Supervisor: Using the office automation tools, change a paragraph in the directive and store the document back into the CM data base.	
290	Expected Result: The training directive will be updated and flagged for down loading to the SMC to replace the document maintained in the SMC data base.	
300	Operations Supervisor: Close the CM data base.	
310	Operations Supervisor: Demonstrate the capability of the LSM to provide, via the ECS bulletin board service, a toolkit consisting of a list of approved CASE tools and references to standards for exchanging data for science use.	
320	Expected Result: Successful demonstration.	
330	Operations Supervisor: Log on to the bulletin board server.	
340	Expected Result: Bulletin board service is initialized.	
350	Operations Supervisor: Scroll down the bulletin board list for information on ECS status, events, and news.	
360	Operations Supervisor: Open the ECS status bulletin board.	
370	Expected Result: A list of the ECS status messages is displayed.	
380	Operations Supervisor: Select a message.	
390	Expected Result: The message is displayed.	
400	Operations Supervisor: Quit.	
410	Expected Result: Exit the bulletin board.	
Data Reduction and Analysis Steps: To assure that complete security policies and procedures applicable to EDC are in-place and are maintained within the SMC complex the following is done: A. Written site policies and procedures are available. B. Inspect the security documentation for applicability to EDC. The inspection also verifies that EDC security documentation is maintained to include latest security directives		
Signature:		**Date:**

8.4.8 Network Management Sequence

This sequence confirms the ECS ability to support, control and maintain ECS network management information such as network configuration management, network fault management,

network performance management, network security management at the EDC DAAC. ECS network configuration management functions are inspected. Procedures for interoperability with the NSI to provide user access to the ECS are inspected.

Configuration: The subsystem needed to perform this sequence of tests are as follows. CSS/MSS, INS & ISS.

External Interfaces: There are no external interfaces needed for this sequence.

Operator Position(s): The operator position from the ECS Maintenance and Operations Position Descriptions document (607/OP2) needed to support this sequence is listed:

DAAC Resource Manager

Operational Scenario(s): The following scenarios, taken from Operations Scenarios for the ECS Project: Release-A (605/OP1), are used during this sequence of tests.

System Status Scenario (Section 3.14.3)

Test Dependencies: There are no test dependencies needed for this sequence of tests.

8.4.8.1 Network Configuration and Status

TEST Procedure No.: A080490.010$E	**Date Executed:**	**Test Conductor:**
Title:	Network Configuration and Status	
Objective:	The Network Status Test confirms the ability of the EDC LSM staff to obtain configuration management information and the status of network resources, including data flow status information. Services provided by ECS include collecting information describing the state of the network subsystem and its communications resources. This test also verifies the ability to perform management functions which exercise control over the network configuration, parameters, and resources. These functions include access to and manipulation of network resources.	

Requirements	Acceptance Criteria
ASTER-1060#A	This requirement is verified through test. ECS shall provide support for Transport Control Protocol/Internet Protocol (TCP/IP) communications protocols to the U.S. Gateway for ASTER GDS communications. The Tester must perform TCP and IP communications tests provided by HP OpenView. **Add verification method to RTM in CCR.**
EOSD0780#A	This requirement is verified through demonstration. Each element shall be capable of being monitored during testing. The Tester must obtain system status using HP OpenView.
ESN-0620#A	This requirement is verified through test. The ESN shall include a network management function to monitor and control the ESN. The Tester must verify that HP OpenView provides the ability to monitor and control the network.

ESN-0640#A	This requirement is verified through test. The ESN shall include management functions at each ECS element, equipment or gateway within the ESN. The MSS Discovery Service must discover (via network protocol) new instances of managed objects, detect missing occurrences of managed objects, and report missing occurrences of managed objects.
ESN-0650#A	This requirement is verified through test. The ESN shall perform the following network management functions for each protocol stack implemented in any ECS element, and each communications facility: a. Network Configuration Management b. Network Fault Management c. Network Performance Management d. Network Security Management The Tester must utilize HP OpenView to obtain information on the system configuration and changes in the system configuration. This test does NOT verify parts b, c and d of the requirement.
ESN-0690#A	This requirement is verified through test. The ESN shall be capable of reconfiguration transparent to network users. **Needs further investigation. On ESDIS List.**
ESN-0750#A	This requirement is verified through test. The ESN shall provide statistical processing capabilities to allow extraction and tabulation of network performance data. The MSS performance management application service must log ECS performance data pertaining to ECS network components and operating system resources.
ESN-0780#A	This requirement is verified through test. The network elements including the Internet interfaces, shall have the capability to report, periodically and on an interactive basis, network statistics to the ESN network management function, including the following information: a. Network round trip delay b. Network reset and restart indications c. Outages and CRC errors d. Performance statistics The ISS physical components, and services must have the capability to be monitored via SNMP agents. This test does NOT verify part d of this requirement.
ESN-0790#A	This requirement is verified through test. The ESN shall include the following configuration management functions at a minimum: a. collect information describing the state of the network subsystem and its communications resources, b. exercise control over the configuration, parameters, and resources of the subsystem, and over the information collected, c. store the configuration information collected, and d. display the configuration information The MSS Maps/Collection Service must retain the status of managed objects and their relationship to symbols that comprise a graphical representation of the physical network topology. The MSS Fault Management Application Service must provide the capability to create, modify, delete and display graphical representations of a given network topology.

ESN-0800#A	This requirement is verified through test. The ESN shall be capable of displaying the local network configuration status related to each system locally, and for all systems at the ESN network management facility. The MSS must be capable of displaying the local network configuration status related to each system locally, and for all systems at the network management facility.
ESN-1030#A	This requirement is verified through demonstration. The ESN shall perform periodic testing of alternate communication capabilities to verify that they are operational. The Tester must demonstrate multiple tests of the communications system.
ESN-1060#A	This requirement is verified through test. The ESN performance management function shall provide the capability to evaluate the performance of ESN resources and interconnection activities. The MSS performance management application service must be capable of receiving operational state change notifications from network components, hosts, applications, and peripherals.
ESN-1070#A	This requirement is verified through test. The ESN shall provide the capability to perform the following functions, at a minimum: a. generate/collect network statistics b. control collection/generation of network statistics c. store system statistics and statistical histories d. display the system statistics e. track end-to-end transaction performance. The Tester must generate, control, display and store system and network statistics. This test does NOT verify part e of this requirement.
ESN-1140#A	This requirement is verified through test. The ESN shall provide protocol translation, termination, bridging and routing. The Tester performs IP, UDP, and SNMP protocol tests demonstration the ability to translate between multiple protocols. The Tester identifies bridges and routers using HP OpenView's configuration topology map.
ESN-1330#A	This requirement is verified through test. The ESN shall provide ISO/OSI data communications protocols and services specified in the GOSIP (see Figure 8-3) to external interfaces as required by the IRDs. The CSS must support the TCP and UDP communication protocols to communicate between the servers and the clients. The GOSIP services are not required in Release A.
ESN-1340#A	This requirement is verified through test. The ESN shall provide support for TCP/IP communications protocols and services to external interfaces as required by the IRDs. The MSS must support TCP/IP communications protocols and services to external interfaces as required by the IRDs. The GOSIP services are not required in Release A.
NSI-0020#A	This requirement is verified through test. NSI shall provide support for TCP/IP communication protocols and services to ESN. The NSI must support TCP/IP communications protocols and services to EDCC as required by the IRDs.

Step-By-Step Procedures		
Step No.	**Input Action / Expected Results**	**Pass / Fail / Comments**
10	Resource Manager: Log on to DAAC MSS Server as an administrator and execute the HP OpenView application.	
20	Expected Results: HP OpenView window is displayed on the screen. The HP OpenView window displays a map depicting the DAAC configuration.	
30	Resource Manager: Identify routers and gateways depicted in the map.	
35	Expected Results: The routers and gateways are displayed in the map.	
40	Resource Manager: Initialize an application being monitored by HP OpenView.	
50	Expected Result: The application is initialized.	
60	Resource Manager: Verify that the system recognizes the monitoring of the application.	
70	Expected Result: The system recognizes the monitoring of the application.	
80	Resource Manager: Exit from the application and verify that the system depicts the change.	
90	Expected Result: The change is depicted by the system.	
100	Resource Manager: Make HP OpenView's window active by clicking on it.	
110	Expected Result: HP OpenView's window is active.	
120	Resource Manager: Perform an IP protocol test.	
130	Expected Result: HP OpenView verifies the use of IP protocol communications.	
140	Resource Manager: Perform a TCP protocol test.	
160	Expected Result: HP OpenView verifies the use of TCP protocol communications.	
170	Resource Manager: Perform an UDP protocol test.	
180	Expected Result: HP OpenView verifies the use of UDP protocol communications.	
190	Resource Manager: Perform an SNMP protocol test.	
200	Expected Result: HP OpenView verifies the use SNMP protocol communications.	
210	Resource Manager: Connect a hardware device to the network (e.g. a printer). Verify that the system recognizes the new configuration.	
220	Expected Result: The topology map displayed by HP OpenView depicts the new configuration.	
230	Resource Manager: Turn off the power to the hardware device. Verify that the system recognized the new configuration.	
240	Expected Result: The topology map displayed by HP OpenView depicts the new configuration.	

250	Resource Manager: Turn the power back on for the hardware device. Verify that the system recognized the new configuration.	
260	Expected Result: The topology map displayed by HP OpenView depicts the new configuration.	
270	Resource Manager: Disconnect the hardware device from the network. Verify that the system recognizes the new configuration.	
280	Expected Result: The topology map displayed by HP OpenView depicts the new configuration.	
290	Resource Manager: Change to the directory which contains the history log.	
300	Resource Manager: Examine the history log to determine whether the events have been documented.	
310	Expected Results: The events have been documented in the history log.	
Data Reduction and Analysis Steps:		
Signature:		**Date:**

8.4.8.2 Directory Service

TEST Procedure No.: A080490.050$E	**Date Executed:**	**Test Conductor:**
Title:	Directory Service	
Objective:	The purpose of this test is to verify the functionality of the Directory/Naming Service. The Directory/Naming Service uniquely associates a name with resources/principals, either physical or logical, along with some information so they can be identified and located by the name even if the named resource changes its physical address over time.	

Requirements	Acceptance Criteria
ESN-0010#A	This requirement is verified through test. ESN shall provide the following standard services: a. Data Transfer and Management Services b. Electronic Messaging Service c. Remote Terminal Service d. Process to Process Communication Service e. Directory and User Access Control Service f. Network Management Service g. Network Security and Access Control Service h. Internetwork Interface Services i. Bulletin Board Service The Tester verifies the directory and user access control service by defining an attribute using the Directory/Naming Service. This test does NOT verify parts a, b, c, d, f, g, h, and i of the requirement.
ESN-0490#A	This requirement is verified through test. The ESN shall provide a name-to-attribute mapping Directory Service. The Tester verifies the name-to-attribute mapping by defining an attribute using the Directory/Naming Service.
ESN-0510#A	This requirement is verified through test. The directory function shall be able to respond to requests for information concerning named objects, either physical or logical, so as to support communications with those objects. The Tester verifies the directory function by modifying an attribute definition using the Directory/Naming Service.
ESN-0590#A	This requirement is verified through test. The ESN Directory Service shall be protected by access control capabilities. The CSS Security service must provide an API to verify the identity of users.
ESN-0600#A	This requirement is verified through test. The ESN Directory service shall include services and supporting mechanisms to authenticate the credentials of a user for the purpose of granting access rights and authorizing requested operations. The CSS Security service must provide an API to check the authorization privileges of principals to access/control services/resources.

ESN-0610#A	This requirement is verified through test. The ESN shall include multiple Directory Service Agents (DSAs) which are collectively responsible for holding or retrieving all directory information which is needed by ECS. The Tester verifies the directory and user access control service by defining an attribute using the Directory/Naming Service.

Test Inputs:

Data Set Name	Data Set ID	File Name	Description	Version
ATTR_001			List of defined attributes	

Step-By-Step Procedures		
Step No.	**Input Action / Expected Results**	**Pass / Fail / Comments**
10	Resource Manager: Login to Client	
20	Expected Results: Client Desktop displays on the screen.	
30	Resource Manager: Perform DCE login using a DCE account and password.	
40	Expected Result: The Computer Operator gains access to the DCE account.	
50	Resource Manager: Type **cdsbrowser &** to verify the directory naming activity.	
60	Expected Result: The directory naming activity is verified.	
70	Resource Manager: From the cdsbrowser, select an attribute and press **Display**.	
80	Expected Result: The system is displays the attributes currently entered into the system.	
90	Resource Manager: Select **Attribute** and press **Display**.	
100	Expected Results: A list of available attributes is displayed on the screen.	
110	Resource Manager: Select the attribute **MSSAttr** to read the attribute values.	
120	Expected Results: The **MSSAttr** attribute values are displayed on the screen.	
130	Resource Manager: Verify a list of attribute types.	
140	Expected Results: Each of the attributes is contained in the list.	
150	Resource Manager: Select **Modify an Attribute**.	
160	Expected Results: Access to modify an attribute is available.	
170	Resource Manager: Change the **MSSAttr** attribute to **CSSAttr**.	
180	Expected Results: The name of the **MSSAttr** attribute is changed to **CSSAttr**.	
Data Reduction and Analysis Steps:		
Signature:		**Date:**

8.5 Performance Management Scenario

This scenario walks EDC operations personnel through the process of accessing and displaying system performance parameters and metrics. It carries the staff through a series of analytical and diagnostic sequences which demonstrate the system's capability to measure EDC performance and detect operational trends.

The Performance Management Scenario's acceptance testing activity confirms those functions that provide global integrated ECS performance management services and exercise system-wide

control. Verifying ECS metrics confirms ECS capability for defining meaningful measures, for developing and maintaining standard performance metrics, and for accomplishing system-level performance testing and performance improvement actions.

8.5.1 Metrics Sequence

This test sequence verifies the capability of the EDC LSM to interact with the SMC to evaluate system performance. LSM capabilities, including the ability to implement SMC performance criteria and limits testing, using SMC data base metrics for comparison, are confirmed. The SMC and the LSM capabilities to generate alert indicators for fault and degraded conditions are also confirmed. Finally, the capability of the EDC DAAC to provide the required availability of key services and to switch over or repair failed capabilities within specified mean down times (MDTs) is confirmed.

Configuration: The subsystem needed to perform this sequence of tests are as follows. CSS/MSS, INS & ISS.

External Interfaces: The external interfaces (i.e. other ECS sites and data sources) needed for this sequence (both real and simulated) are listed:

SMC

Operator Position(s): The operator positions from the ECS Maintenance and Operations Position Descriptions document (607/OP2) needed to support this sequence are listed:

SMC Performance Analyst

DAAC Production Monitor

DAAC Resource Manager

Operational Scenario(s): The operations scenarios, taken from the Operations Scenarios for the ECS Project: Release-A document (605/OP1), that were used to develop tests in this sequence of tests are listed:

User Notes Performance Degradation (Section 3.5.2) - A080510.010$E

Operation Support Scenario (Section 3.5.1) - A080510.020$E

Test Dependencies: The following table identifies the test procedure(s) for this sequence of test that should be run prior to or concurrently with this test procedure.

Test Procedure No.	Site/Procedure No.	Comments
A080510.010$E	A080510.010$S	Concurrent
A080510.030$E	A080510.020$E	Concurrent

8.5.1.1 Performance Metrics Establishment

TEST Procedure No.: A080510.010$E	**Date Executed:**	**Test Conductor:**

Title:	Performance Metrics Establishment
Objective:	This test case verifies the capability of the SMC and the local site LSMs to establish, maintain and update system performance criteria and performance parameter limits and thresholds. The capability to establish multiple threshold levels, including on/off, pass/fail, and various levels of degradation, is also confirmed.

Requirements	Acceptance Criteria
ESN-1090#A	This requirement is verified through test. The ESN shall provide the capability to control the communications performance parameters of the network. On ESDIS List.
SMC-3355#A	This requirement is verified through analysis. The LSM shall implement the performance criteria from SMC (including parametric limits and operational threshold levels) for evaluating element resource performance During this test, LSM capabilities to set thresholds sent by the SMC will be verified by bringing up the appropriate tools and setting selected thresholds.
SMC-3375#A	This requirement is verified through test. For each limit checked parameter, the LSM (including those thresholds directed by the SMC) shall have the capability of evaluating multiple levels of thresholds including, at a minimum: a. On/off b. Pass/fail c. Various levels of degradation During this test, LSM capabilities to set thresholds sent by the SMC will be verified by bringing up the appropriate tools and setting each of the thresholds.
SMC-3385#A	This requirement is verified through test. **(RTM: analysis)** The LSM shall evaluate system performance against the ESDIS project established performance criteria. During this test, LSM capabilities to monitor system performance against ESDIS project performance criteria sent via the SMC will be verified by bringing up performance monitoring tools and demonstrating that these tools are capable of monitoring the specified performance parameters.

Test Inputs:	Required test case inputs include a list of ESDIS-specified performance parameters, specifications, and policies and procedures, as well as an operational script exercising different levels of performance to assess the capability to update and check limit and threshold parameters.

Data Set Name	Data Set ID	File Name	Description	Version

Step-By-Step Procedures		
Step No.	**Input Action / Expected Results**	**Pass / Fail / Comments**
10	DAAC Production Monitor: Starts HP OpenView.	
20	Expected Result: OpenView window displays top level system map.	
30	DAAC Production Monitor: Selects an MSS managed host and set two thresholds for CPU utilization, one to indicate degraded performance and the other to indicate failure.	
40	Expected Result: The new CPU utilization threshold values can be observed by examining the Management Information Base (MIB).	
50	DAAC Production Monitor: Starts a script to cause the CPU utilization to exceed the threshold for degraded performance but not to exceed the upper (failure) limit.	
60	Expected Result: The MSS managed host is running in a degraded state due to heavy CPU utilization.	
70	DAAC Production Monitor: Clicks on CPU LOAD option from HP OpenView for MSS managed host.	
80	Expected Result: HP OpenView displays a CPU LOAD Graph containing the average CPU load on that host.	
90	DAAC Production Monitor: Clicks on TIME INTERVAL option from HP OpenView menu for that host and scrolls back to the time period when the lower CPU utilization threshold is exceeded (but not the upper limit).	
100	Expected Result: HP OpenView displays a CPU LOAD Graph containing the raised CPU load level .	
110	DAAC Production Monitor: Starts a script to cause the upper limit threshold to be exceeded.	
120	Expected Result: System is running MSS managed host exceeding its upper (failure) limit CPU utilization threshold thus causing a failure on the MSS managed host.	
130	DAAC Production Monitor: Clicks on CPU LOAD option from HP OpenView for MSS managed host.	
140	Expected Result: HP OpenView displays a CPU LOAD Graph containing the average CPU load on that host.	
150	DAAC Production Monitor: Clicks on TIME INTERVAL option from HP OpenView menu for that host and scrolls back to the time period that the upper limit CPU utilization threshold is exceeded.	
160	Expected Result: HP OpenView displays a CPU LOAD Graph containing the upper level of CPU load exceeded the currently configured CPU threshold thus causing the MSS managed host to fail. The HP OpenView icon for the MSS managed host is in red.	
170	DAAC Production Monitor: Repeats steps 10 - 160 using the Memory utilization performance parameter.	

180	Expected Result: As indicated in steps 10 - 160 but memory utilization now exceeds thresholds for degraded performance and later for failure).	
	THRESHOLDS DIRECTED BY THE SMC	
190	SMC Performance Analyst: Repeats steps 10 - 160 using SMC to set thresholds.	
200	Expected Result: As indicated in steps 10 - 160 but Performance Analyst at SMC now sets the thresholds for EDC site performance.	
Data Reduction and Analysis Steps: Expected results include the verification of the capability of the SMC and the site LSMs to establish, maintain and update system performance parameters and limit thresholds. The capability to monitor performance and to evaluate performance and any degradation with respect to these parameters will be confirmed.		
Signature:		**Date:**

8.5.1.2 Performance Measurement and Degradation Response Capability

TEST Procedure No.: A080510.020$E	**Date Executed:**	**Test Conductor:**

Title:	Performance Measurement and Degradation Response Capability
Objective:	This test case verifies the capability of the EDC DAAC site LSM to generate alert indicators for fault or degraded conditions and to generate corrective actions in response to these faults or degradations.

Requirements	**Acceptance Criteria**
SMC-3395#A	This requirement is verified through test. The LSM shall generate, in response to each limit check threshold, alert indicators of fault or degraded conditions. During the test, conditions will be created to trigger alert indicators for each limit checked threshold. The requirement will be verified after the selected limit checked thresholds have been exceeded and appropriate alerts generated.

Test Inputs:	Required test case inputs include performance parameters and specifications, and an operational script for exercising and simulating faults and degraded performance conditions. ESDIS policies and procedures specifying the range of responses and corrective actions to faults and performance degradation are also needed.

Data Set Name	**Data Set ID**	**File Name**	**Description**	**Version**

Step-By-Step Procedures		
Step No.	**Input Action / Expected Results**	**Pass / Fail / Comments**
10	DAAC Production Monitor: Starts the Management Information Base (MIB) initialization program using the input configuration file.	
20	Expected Result: The performance thresholds and system responses specified in the input configuration file are generated.	
30	DAAC Production Monitor: Clicks on HP OpenView Browse MIB option.	
40	Expected Result: HP OpenView shows the performance thresholds and system responses specified in the input configuration file.	
50	DAAC Production Monitor: Starts a production run of a PGE process on AITHW-EDC-1 that uses excessive disk space and causes the free space on AITHW-EDC-1 to fall below the threshold.	
60	Expected Result: A warning message indicating that free disk space on AITHW-EDC-1 has fallen below the threshold is displayed on the SMC operator's screen.	
70	DAAC Production Monitor: Double clicks on the EDC icon on HP OpenView .	
80	Expected Result: HP OpenView displays EDC submap.	
90	DAAC Production Monitor: Clicks on AITHW-EDC-1 icon.	
100	Expected Result: HP OpenView highlights the icon.	
110	DAAC Production Monitor: Selects the Browse MIB option to determine the problem.	
120	Expected Result: HP OpenView shows information on various MIB parameters, including degraded state of disk free space.	
130	DAAC Production Monitor: Graphs available disk free space data.	
140	Expected Result: HP OpenView graph capability shows that there has been excessive disk utilization since the process of Step 10 was started.	
150	DAAC Production Monitor: Terminate the process started in Step 50.	
160	Expected Result: The PGE process is terminated.	
170	DAAC Production Monitor: Saves the associated disk file to temporary storage.	
180	Expected Result: The disk file is backed up.	
190	DAAC Production Monitor: Deletes the associated disk file.	
200	Expected Result: The disk file is deleted.	
210	DAAC Production Monitor: Clicks on HP OpenView Browse MIB option.	

220	Expected Result: HP OpenVIew shows that AITHW-EDC-1 disk free space is no longer in a degraded state.	
230	DAAC Production Monitor: Clicks on the HP OpenView Update MIB option.	
240	Expected Result: HP OpenView displays current values for MIB parameters.	
250	DAAC Production Monitor: Updates performance criteria for response time, updates deficiency response to change color of the icon for the node responsible for the activity.	
260	Expected Result: Inspection of the MIB shows that the information has been updated.	
270	DAAC Production Monitor: Restarts a production run of a PGE process on AITHW-EDC-1 (step 50) without using excessive disk space.	
280	Expected Result: When the specified response time is exceeded, the specified icon will change color.	
290	DAAC Production Monitor: Repeats steps 240-280, goes through each of the remaining parameters indicated on the MIB.	
300	Expected Result: As indicated in steps 240-280.	
Data Reduction and Analysis Steps: Expected results include the verification of the capability of the site LSMs to monitor performance and to generate corrective actions for performance degradation and system faults.		
Signature:		**Date:**

Table 8-1. RMA Capabilities

ECS Segment	ECS Function or Service Provided	Minimum Availability/Maximum MDT
Overall	System-level Functions and Services	0.96/ 4 hr's.
SDPS	Receiving Science Data	0.999/ 2 hr's.
SDPS	Archiving and Distributing Data	0.98/ 2 hr's.
SDPS	User Interfaces to Information Management System (IMS) Services at DAAC Sites	0.993/ 2 hr's.
SDPS	Information Searches on the ECS Directory	0.993/ 2 hr's.
SDPS	Metadata Ingest and Update	0.96/ 4 hr's.
SDPS	Information Searches on Local Holdings	0.96/ 4 hr's.
SDPS	Local Data Order Submission	0.96/ 4 hr's.
SDPS	Data Order Submission Across DAACs	0.96/ 4 hr's.
SDPS	IMS Data Base Management and Maintenance Interface	0.96/ 4 hr's.
SDPS	Product Generation Capability (Each Computer)	0.95/ N/A
CSMS	SMC Capability to Gather and Disseminate System Management Information (for critical services)	0.998/ 20 min.

8.5.1.3 RMA Assurance Test and Analysis

TEST Procedure No.: A080510.030$E	**Date Executed:**	**Test Conductor:**
Title:	RMA Assurance Test and Analysis	
Objective:	This test case verifies the capability of the ECS to provide services with required reliability, maintainability and availability (RMA). It confirms the capability of the ECS to correct faults and to restore system capabilities within specified times. GSFC 420-05-03, Performance Assurance Requirements for the EOSDIS is the primary RMA Program Plan and , MIL-HDBK-217F, Reliability Prediction of Electronic Equipment, and MIL-HDBK-472, Maintainability Prediction, Procedure IV, provide guidelines in verifying ECS RMA. Table 8-1 summarizes key availability and maximum Mean Down Time (MDT) requirements for specific ECS services verified by this test case.	
Requirements	**Acceptance Criteria**	
EOSD3490#A	This requirement is verified through inspection. (**RTM: demo)** Reliability statistics for ECS shall be collected and monitored using the Mean Time Between Maintenance (MTBM) for each component and operational capability. This capability is demonstrated by inspection of the MTBM Predictions used in, and analysis results documented in the DID #515. The inspection of process and procedures to collect and analyze RMA data during system operations after RRR will verify that Mean Time Between Maintenance MTBM will be collected and monitored.	

EOSD3492#A	This requirement is verified through inspection. RMA data shall be maintained in a repository accessible for logistics analysis and other purposes. This capability is demonstrated by inspection of the RMA database documented in the approved DIDs #516 and #518.
EOSD3500#A	This requirement is verified through inspection. The ECS RMA Program shall adhere to GSFC 420-05-03, Performance Assurance Requirements for the EOSDIS. This capability is demonstrated by inspection of RMA Program Plan which is Section 7.0 of the approved Performance Assurance Implementation Plan DID #501 .
EOSD3510#A	This requirement is verified through inspection. Reliability predictions shall be calculated in accordance with the parts count analysis method, Appendix A, of MIL-HDBK-217F, Reliability Prediction of Electronic Equipment. This capability is demonstrated by inspection of the prediction process and Reliability prediction values in the approved DID #516.
EOSD3600#A	This requirement is verified through inspection. Maintainability shall be predicted in accordance with MIL-HDBK-472, Maintainability Prediction, Procedure IV. This capability is demonstrated by inspection of the prediction process and Maintainability prediction values in the approved DID #518.
EOSD3620#A	This requirement is verified through inspection. **(RTM: analysis)** ECS shall predict and periodically assess maintainability by measuring the actual MDT and comparing to the required MDT. The prediction requirement is demonstrated by inspection of the process and prediction values in the approved DID #515 and #518. The assessment requirement of the actual MDT is demonstrated by inspection of the process and procedures to collect and analyze RMA data during system operations after RRR .
EOSD3625#A	This requirement is verified through inspection. For ECS functions with a backup capability, ECS shall use switchover time to the backup capability in measuring maintainability, rather than down time, when the component goes down. This requirement is demonstrated by inspection of the approved DID #515.
EOSD3630#A	This requirement is verified through inspection. **(RTM: analysis)** The maximum down time shall not exceed twice the required MDT in 99 percent of failure occurrences. This requirement will be demonstrated by inspection of the actual MDT data when the system has been in operation for a statistically significant length of time. (Note: This requirement is not verifiable until the system has been in operation for a statistically significant length of time.) This requirement is not verifiable until the system has been in operation for a statistically significant lenth of time.

EOSD3900#A	This requirement is verified through inspection. (**RTM: analysis)** The SDPS function of receiving science data shall have an operational availability of 0.999 at a minimum (.99995 design goal) and an MDT of two (2) hours or less (8 minutes design goal). This requirement is demonstrated by inspection of the approved DID #515.
EOSD3910#A	This requirement is verified through test. The switchover time from the primary science data receipt capability to a backup capability shall be 15 minutes or less (10 minutes design goal). This requirement is demonstrated by the Maintainability Demonstration Test defined in DIDs #511 and #512 and documented in the Report DID 519.
EOSD3920#A	This requirement is verified through inspection. (**RTM: analysis)** The SDPS function of archiving and distributing data shall have an operational availability of 0.98 at a minimum (.999999 design goal) and an MDT of two (2) hours or less (9 minutes design goal). This requirement is demonstrated by inspection of the approved DID #515.
EOSD3930#A	This requirement is verified through inspection. (**RTM: analysis**) The user interfaces to Information Management System (IMS) services at individual Distributed Active Archive Center (DAAC) sites shall have an operational availability of 0.993 at a minimum (.9997 design goal) and an MDT of two (2) hours or less (1.6 hour design goal). This requirement is demonstrated by inspection of the approved DID #515.
EOSD3940#A	This requirement is verified through inspection. (**RTM: blank**) The SDPS function of Information Searches on the ECS Directory shall have an operational availability of 0.993 at a minimum (.9997 design goal) and an MDT of two (2) hours or less (1.4 hour design goal). This requirement is demonstrated by inspection of the approved DID #515.
EOSD3960#A	This requirement is verified through inspection. (**RTM: analysis)** The SDPS function of Metadata Ingest and Update shall have an operational availability of 0.96 at a minimum (.999999 design goal) and an MDT of four (4) hours or less (6 minutes design goal). This requirement is demonstrated by inspection of the approved DID #515.
EOSD3970#A	This requirement is verified through inspection. (**RTM: analysis)** The SDPS function of Information Searches on Local Holdings shall have an operational availability of 0.96 at a minimum (.999999 design goal) and an MDT of four (4) hours or less (6 minutes design goal). This requirement is demonstrated by inspection of the approved DID #515.

EOSD3980#A	This requirement is verified through inspection. **(RTM: analysis)** The SDPS function of Local Data Order Submission shall have an operational availability of 0.96 at a minimum (.999999 design goal) and an MDT of four (4) hours or less (6 minutes design goal). This requirement is demonstrated by inspection of the approved DID #515.
EOSD3990#A	This requirement is verified through inspection. **(RTM: analysis)** The SDPS function of Data Order Submission Across DAACs shall have an operational availability of 0.96 at a minimum (.999999 design goal) and an MDT of four (4) hours or less (6 minutes design goal). This requirement is demonstrated by inspection of the approved DID #515.
EOSD4000#A	This requirement is verifiedthrough inspection. (**RTM: analysis**) The SDPS function of IMS Data Base Management and Maintenance Interface shall have an operational availability of 0.96 at a minimum (.999999 design goal) and an MDT of four (4) hours or less (6 minutes design goal). This requirement is demonstrated by inspection of the approved DID #515.
EOSD4010#A	This requirement is verified through inspection. **(RTM: analysis)** Each computer providing product generation shall have an operational availability of 0.95 at a minimum (.9995 design goal). This requirement is demonstrated by inspection of the approved DID #515.
EOSD4100#A	This requirement is verified through test.**(RTM: Demo)** The ECS segments, elements, and components shall include the on-line (operational mode) and off-line (test mode) fault detection and isolation capabilities required to achieve the specified operational availability requirements. This requirement is demonstrated by the Maintainability Demonstration Test defined in DIDs #511 and #512 and documented in the Report DID 519..

Test Inputs: Test case inputs include reliability data and repair specifications for key ECS components, switch over time estimations, in-the-field maintenance records, and demonstrations by operations staff of repair and switch over procedures for various failure occurrences.

Data Set Name	Data Set ID	File Name	Description	Version

Step-By-Step Procedures		
Step No.	**Input Action / Expected Results**	**Pass / Fail / Comments**
10	DAAC Resource Manager: Inspects DID #515 to verify the following requirements: EOSD3490#A, EOSD3620#A, EOSD3625#A, EOSD3700#A, EOSD3900#A, EOSD3920#A, EOSD3930#A, EOSD3940#A, EOSD3960#A, EOSD3970#A, EOSD3980#A, EOSD3990#A, EOSD4000#A, EOSD4010#A.	
20	Expected Result: The expected result for each requirement is as stated in the acceptance criteria for each respective requirement.	
30	DAAC Resource Manager: Inspects DID #516 for the following requirements: EOSD3492#A, EOSD3510#A.	
40	Expected Result: The expected result for each requirement is as stated in the acceptance criteria for each respective requirement.	
50	DAAC Resource Manager: Inspects DID #518 for the following requirements: EOSD3492#A, EOSD3600#A, EOSD3620#A.	
60	Expected Result: The expected result for each requirement is as stated in the acceptance criteria for each respective requirement.	
70	DAAC Resource Manager: Inspects DID #501 for the following requirements: EOSD3500#A.	
80	Expected Result: The expected result for each requirement is as stated in the acceptance criteria for each respective requirement.	
90	DAAC Resource Manager: Examines the test executed in Maintenability Demo Test, DID #511 and DID #512 to verify that the switchover time from the primary science data receipt capability to a backup capability will take 15 minutes or less (EOSD3910#A).	
100	Expected Result: DID #519 (Test Report) states that the result of the test stated in DID #511 and DID #512 indicating that the switchover from the primary science data receipt capability to a backup capability takes 15 minutes or less.	
110	DAAC Resource Manager: Examines the test executed in Maintainability Demo Test, DID #511 and DID #512 to verify that the ECS system includes the on-line (operational mode) and off-line (test mode) fault detection and isolation capabilities required to achieve the specified operational availability (EOSD4100#A).	

120	Expected Result: DID #519 (Test Report) states that the result of the test stated in DID #511 and DID #512 indicating the ECS system includes the on-line (operational mode) and off-line (test mode) fault detection and isolation capabilities required to achieve the specified operational availability.	
Data Reduction and Analysis Steps: Expected results include inspecting the related Maintainability Demo Test documents to confirm that the ECS can make needed services available as required and can repair or switch over from failed capabilities.		
Signature:		**Date:**

8.5.2 Performance Monitoring, Analysis & Testing Sequence

This sequence guides the reviewer in confirming each LSM's (including the EDC's) capabilities to generate, as needed, requests for performance testing including resources to be tested, test purpose, requested test environment, impacts to operations and expected results. This evaluation includes confirmation and review of the performance test tool and evaluation of LSM personnel resources to determine the ability of the system and site test teams to respond to specific testing requests.

This test sequence guides the reviewer in inspecting site (including EDC) capability for performing, analyzing and reporting on short and long term performance trend analyses of site operational status, specific resource performance and maintenance activities. The LSM's performance management team procedures for monitoring site hardware and software to determine their operational states (on-line, failed, in maintenance mode, test mode, or simulation mode) are inspected.

Configuration: The subsystem needed to perform this sequence of tests are as follows. CSS/MSS, INS & ISS.

External Interfaces: The external interfaces (i.e. other ECS sites and data sources) needed for this sequence (both real and simulated) are listed:

SMC, EBnet

Operator Position(s): The operator positions from the ECS Maintenance and Operations Position Descriptions document (607/OP2) needed to support this sequence are listed:

DAAC Production Planner

DAAC Resource Manager

Operational Scenario(s): The operations scenarios, taken from the Operations Scenarios for the ECS Project: Release-A document (605/OP1), that were used to develop tests in this sequence of tests are listed:

Resource Planning (Section 3.7.1) - A080520.010$E

User Notes Performance Degradation (Section 3.5.2) - A080530.010$E

Performance Trending Scenario (Section 3.5.4) - A080530.010$E

Preparing for New Algorithm Scenario (Section 3.5.3) - A080530.010$E

Test Dependencies: The following table identifies the test procedure(s) for this sequence of test that should be run prior to or concurrently with this test procedure.

Test Procedure No.	Site/Procedure No.	Comments
A080520.010$E	Software Development Benchmark Test	Prior
A080520.010$E	SMC/A080520.010$S	Concurrent
A080530.010$E	EDC/A080520.010$E	Concurrent

8.5.2.1 Performance Testing

TEST Procedure No.: A080520.010$E	**Date Executed:**	**Test Conductor:**
Title:	Performance Testing	
Objective:	This test case verifies that the LSM has the capability to generate and coordinate requests for performance and benchmark testing. It also evaluates the LSM's ability to respond to testing requests.	

Requirements	**Acceptance Criteria**
EOSD0560#A	This requirement is verified through demonstration. **(RTM: test)** ECS benchmark tests and test data sets shall be defined for system verification and data quality evaluation. The benchmark tests and test data sets provided by a representative ECS element (e.g., a Data Server subsystem) will run to completion and generate reports.
EOSD0700#A	This requirement is verified through demonstration. Each ECS element shall provide the following, to be used in the revalidation of its functional performance: a. Benchmark test(s) b. Standard test data sets. A representative ECS element's (e.g., a Data Server subsystem) benchmark tests used to revalidate its functional performance will be run to completion.
EOSD0720#A	This requirement is verified through demonstration. **(RTM: test).** Each ECS element shall be able to validate at any time during the life-time of the ECS that the ECS element primary functional performance is consistent with pre-defined operational benchmark tests. A representative ECS element's (e.g., a Data Server subsystem) benchmark tests will be run to completion.
SMC-3397#A	This requirement is verified through demonstration. The LSM shall generate, as needed, requests for performance testing, including, at a minimum: a. Resource to be tested b. Test purpose c. Requested test priority d. Required test environment e. Impacts to operations f. Expected test results Performance tools will be used by an operations staff to request performance testing which includes the following information: a. Resource to be tested b. Test purpose c. Requested test priority d. Required test environment e. Impacts to operations f. Expected test results

Test Inputs:	Test case inputs include benchmark tests and standard test data sets for a representative ECS element (e.g., Data Server Subsystem) provided by the software development group. Scripts or M&O procedures to cause performance testing requests to be generated will also be needed.			
Data Set Name	**Data Set ID**	**File Name**	**Description**	**Version**

Step-By-Step Procedures		
Step No.	**Input Action / Expected Results**	**Pass / Fail / Comments**
10	DAAC Production Planner: Follows M&O's to be developed procedure for requesting performance test (in this case, benchmark test).	
20	Expected Result: Performance test request procedure executed.	
30	DAAC Production Planner: Starts Resource Planning tool.	
40	Expected Result: Resource Planning window appears on the screen.	
50	DAAC Production Planner: Clicks Edit push-button on the Resource Planning window.	
60	Expected Result: Resource Request form appears in the window.	
70	DAAC Production Planner: Enters a request to run a benchmark test on EDC DAAC host, including start and end times, resources, brief description including test purpose and priority, comments including required environment, impacts to operations, and expected test results. Then clicks "Accept".	
80	Expected Result: The request is entered into the resource planning database.	
90	DAAC Production Planner: Clicks Review push-button on the Resource Planning window.	
100	Expected Result: A list of resource requests appears on the screen.	
110	DAAC Production Planner: Double clicks on the request.	
120	Expected Result: The complete request as previously entered by the DAAC Production Planner appears on the screen.	
130	DAAC Production Planner: Inspects the request for validity. Clicks on the Validate and Approve push-buttons on the screen.	
140	Expected Result: The resource request includes the "Validated" and "Approved" indicators.	
150	DAAC Production Planner: Clicks on the Accept push-button.	
160	Expected Result: The resource planning database is successfully updated.	
170	DAAC Production Planner: Initiates the EDC DAAC performance benchmark test.	
180	Expected Result: The EDC DAAC performance benchmark test runs to completion, storing a summary of results in the performance management database and printing a summary of the results.	

Data Reduction and Analysis Steps:	
The printed benchmark summaries are examined to ensure that they are consistent with the observations of the AT team during the actual test runs. The history log is analyzed and the performance benchmark test should include: a. Resource to be tested b. Test purpose c. Requested test priority d. Required test environment e. Impacts to operations f. Expected test results	
Signature:	**Date:**

8.5.2.2 Performance Monitoring and Analysis

TEST Procedure No.: A080530.010$E	**Date Executed:**	**Test Conductor:**

Title:	Performance Monitoring and Analysis
Objective:	This test case verifies the capabilities of the LSM to use performance management tools to augment overall system management activities for all EDC DAAC resources and personnel. The test objectives are to observe and acquire performance trend information. Visualization capabilities that enable SMC and LSM operations personnel to determine the state for each principal node of the ECS network and the LAN, respectively, are confirmed. The DAAC-specific load and throughput performance analysis are conducted. The analysis determines if the DAAC exhibits a maximum steady state throughput at which some resource, e.g., CPU execution time, channel transfer rates, disc access rates, or memory, is fully occupied.

Requirements	**Acceptance Criteria**
ESN-1060#A	This requirement is verified through test. The ESN performance management function shall provide the capability to evaluate the performance of ESN resources and interconnection activities. On ESDIS List.
ESN-1065#A	This requirement is verified through analysis. The ESN performance management function shall include trend analysis for prediction of loading and bottlenecks/delays. The trend analysis on ESN performance management function will include the prediction of loading and bottlenecks/delays. On ESDIS List.
NI-0460#A	This requirement is verified through test. ECS shall have the capability to receive periodic information regarding EBnet network performance and link utilization. The EBnet network performance and link utilization will be sent to ECS periodically and will be monitored by querying the management database and included in a performance report.
NSI-0060#A	This requirement is verified through test. **(RTM: blank)** NSI shall provide ECS SMC with load analysis reports, reflecting or summarizing NSI performance measurements over various time intervals. SMC will receive the load analysis reports from NSI and a trend analysis with various time intervals will be performed based on the NSI's load reports.

SMC-3305#A	This requirement is verified through test. The LSM shall monitor its elements hardware, and scientific and system software status to determine their operational states including, at a minimum : a. On-line b. Failed c. In maintenance d. In test mode e. In simulation mode The operational states (i.e., on-line, failed, in maintenance, in test mode and in simulation mode) of EDC DAAC hardware, scientific and system software will be indicated via HP Open View.
SMC-3315#A	This requirement is verified through demonstration. The LSM shall monitor its elements schedule and execution of events. LSM will check the status of an executed task which is planned via the resource planning tool.
SMC-3325#A	This requirement is verified through demonstration. The LSM shall monitor execution of ground operations events. The performance data resulting from one of the ground operation events (i.e., performance testing: A080520.010$E, SMC-3397#A) will be collected and analyzed.
SMC-3335#A	This requirement is verified through test. The LSM shall compare and evaluate its elements actual schedule performance against planned schedule performance. A set of tasks will be executed and reports generated by LSM and the actual schedule performances will be manually compared against those of planned schedule performances.
SMC-3415#A	This requirement is verified through test. The LSM shall perform short and long-term trend analysis of element performance, including, at a minimum: a. Operational status b. Performance of a particular resource c. Maintenance activities (e.g., number of repairs per item) Graphical Performance trend analysis reports on operational status, performance and maintenance activities for a particular device (e.g., archive storage device) will be obtained and analyzed.

Test Inputs: A script that performs a query of the management database will be needed.

Data Set Name	Data Set ID	File Name	Description	Version

Step-By-Step Procedures		
Step No.	**Input Action / Expected Results**	**Pass / Fail / Comments**
10	DAAC Resource Manager: Initializes HP OpenView.	
20	Expected Result: The HP OpenView window appears displaying the root map for the system.	
30	DAAC Resource Manager: Follows procedure to place computer running MSS at EDC DAAC in maintenance mode.	
40	Expected Result: The MSS at EDC DAAC is now in maintenance mode.	
50	DAAC Resource Manager: Uses the “Locate” function on the HP OpenView menu to bring up the map containing the MSS at EDC DAAC.	
60	Expected Result: The map containing the MSS at EDC DAAC appears on the screen. The host icon indicates that the host is in maintenance mode.	
70	DAAC Resource Manager: Follows procedure to place computer running MSS at EDC DAAC in test mode.	
80	Expected Result: The MSS at EDC DAAC is now in test mode.	
90	DAAC Resource Manager: Uses the “Locate” function on the HP OpenView menu to bring up the map containing the MSS at EDC DAAC.	
100	Expected Result: The map containing the MSS at EDC DAAC appears on the screen. The host icon indicates that the host is in test mode.	
110	DAAC Resource Manager: Follows procedure to place computer running MSS at EDC DAAC in simulation mode.	
120	Expected Result: The MSS at EDC DAAC is now in simulation mode.	
130	DAAC Resource Manager: Uses the “Locate” function on the HP OpenView menu to bring up the map containing the MSS at EDC DAAC.	
140	Expected Result: The map containing the MSS at EDC DAAC appears on the screen. The host icon indicates that the host is in simulation mode.	
150	DAAC Resource Manager: Places the host running the MSS at EDC DAAC online.	
160	Expected Result: The host icon is green indicating that the host is up and functioning.	
170	DAAC Resource Manager: Induces a failure in a tape drive. (Possibly, attempt to write to a write protected tape cartridge.)	
180	Expected Result: Failure status for the tape drive appears.	
190	DAAC Resource Manager: Clicks on the icon for the host to which the tape drive is connected.	

200	Expected Result: The icon is highlighted.	
210	DAAC Resource Manager: Requests to view status of host hardware.	
220	Expected Result: The status display indicates failure status for the tape drive.	
230	DAAC Resource Manager: Run a script that performs a query of the management database for status and performance information on storage systems, network utilization, ground operation events (e.g., performance testing) etc. The script will create a report from the data.	
240	Expected Result: A report containing the desired status and performance information is printed. It is saved for post test analysis.	
250	DAAC Resource Manager: Starts up the spreadsheet application.	
260	Expected Result: The spreadsheet is up and running.	
270	DAAC Resource Manager: Imports the monthly network performance data into the spreadsheet.	
280	Expected Result: The network performance data from the management database appear in the spreadsheet cells.	
290	DAAC Resource Manager: Creates spreadsheet tables (using the spreadsheet package) containing the network performance data.	
300	Expected Result: The spreadsheet tables containing the network performance data are created.	
310	DAAC Resource Manager: Enters spreadsheet command to create weekly trend predictions for the next six months for the network performance values using statistical trending functions provided in the spreadsheet application.	
320	Expected Result: The spreadsheet application calculates future values for the performance metrics using statistical trending functions provided as part of the spreadsheet package.	
330	DAAC Resource Manager: Enters spreadsheet commands to create graphical prepresentations of the trend predictions created in the previous step .	
340	Expected Result: The spreadsheet application creates a line graph depicting both the actual data stored in the management database and the future values predicted by the spreadsheet for each of the network performance metrics.	
350	DAAC Resource Manager: Change the time interval to be used in trend analysis to get the short term trend analysis.	
360	Expected Result: The graphs will be automatically updated to reflect the change in data.	
370	DAAC Resource Manager: At the conclusion of the performance test (A080520.010$E), enter HP OpenView command to view system performance data from the test.	
380	Expected Result: The performance data are displayed on the screen.	

390	DAAC Resource Manager: Retrieves from the management database performance data from a previous run of the same data.	
400	Expected Result: The previous performance test data are displayed on the screen.	
410	DAAC Resource Manager: Enters command to print a summary report of performance data from the two performance test runs.	
420	Expected Result: The summary report is printed. The results are used for post test analysis to determine the necessity of modifying or potential enhancements to system.	
Data Reduction and Analysis Steps: Spreadsheet tables containing the network performance data are printed and compared with the report generated by querying the management. The site history log is printed and is examined to verify that the status changes and failures that occur during this test are recorded.		
Signature:		**Date:**

8.6 Ancillary Services Scenario

This scenario takes site management personnel through a series of cases involving the use of system services in the management of the site. It carries the site management staff through certain system fault detection and isolation instances, security monitoring episodes, and accounting and report generation sequences. AT of fault management activity evaluates the capability for performing site-level fault analysis, fault diagnostic testing and recovery actions. Evaluation of ECS accounting and accountability activities extends to LSM in-site functions including related data collection, analysis and reporting activities is assessed. Evaluation of ECS report generation capabilities extends to evaluating the capability for providing required reports specified by all of the services referenced in the system management scenario group.

8.6.1 Fault Management Sequence

This sequence confirms the ECS capability to detect site-level faults and to analyze fault conditions, perform diagnostic testing, correct and recover from faults (or execute suitable contingency actions). The site operations teams confirm each site's capability to recover from global faults such as system failures, global data losses, or catastrophic security violations as well as local fault conditions. The EDC DAAC operation personnel capabilities and test tools for isolating, locating, identifying and analyzing faults at the system and site level (except for flight operations faults) are confirmed by inspection of training records and by evaluation of operator performance during abnormal shutdown and recovery demonstrations (Sections 8.1.4 and 8.1.5). The EDC ECS DAAC capabilities for performing fault diagnostic testing are confirmed. The EDC ECS DAAC capability for recovering from fault situations is evaluated during previous shutdown and recovery testing.

Configuration: The subsystem needed to perform this sequence of tests are as follows. CSS/MSS, INS & ISS.

External Interfaces: The external interfaces (i.e. other ECS sites and data sources) needed for this sequence (both real and simulated) are listed:

SMC

EOC

LaRC ECS DAAC

GSFC ECS DAAC

Operator Position(s): The operator positions from the ECS Maintenance and Operations Position Descriptions document (607/OP2) needed to support this sequence are listed:

DAAC Computer Operator

DAAC Resource Manager

DAAC Operations Supervisor

DAAC User Services Representative

TT Review Board

Operational Scenario(s): The operations scenarios, taken from the Operations Scenarios for the ECS Project: Release-A document (605/OP1), that were used to develop tests in this sequence of tests are listed:

Trouble Ticket and Problem Tracking Scenario (Section 3.2.1)

Non Conformance Report Scenario (Section 3.14.5)

Test Dependencies: There are no test dependencies needed for this sequence of tests.

8.6.1.1 Data Archive and Distribution Fault Analysis and Diagnostic Testing

This test procedure is not applicable for the EDC Volume of the Acceptance Test Procedures document for Release A.

8.6.1.2 Product Generation Fault Analysis and Diagnostics Testing

This test procedure is not applicable for the EDC Volume of the Acceptance Test Procedures document for Release A.

8.6.1.3 Communications Fault Analysis and Diagnostics Testing

TEST Procedure No.: A080610.050$E	**Date Executed:**	**Test Conductor:**
Title:	Communications Fault Analysis and Diagnostic Testing	
Objective:	This test verifies the fault management requirements for the communications subsystem of the ECS. Simulated faults are induced in the subsystem to verify fault detection, fault isolation and reporting.	

Requirements	Acceptance Criteria
ESN-0650#A	This requirement is verified through test. The ESN shall perform the following network management functions for each protocol stack implemented in any ECS element, and each communications facility: a. Network Configuration Management b. Network Fault Management c. Network Performance Management d. Network Security Management A CSS fault induced by interrupting a network connection must be properly managed such that the fault is detected, system operators are notified about the fault, and the fault is logged and forwarded to the SMC. This test does not include ESN-0650#A items a, c and d.
ESN-0740#A	This requirement is verified by test. The ESN network management service shall retrieve performance/fault data about ESN protocol stacks and equipment. A CSS fault induced by interrupting a network connection must be detected and information provided that accurately identifies the fault. Performance data is not tested in this test case.
ESN-0810#A	This requirement is verified through test. ESN shall provide the following fault management functions at a minimum: a. detect the occurrence of faults, b. control the collection of fault information, and c. diagnose the probable cause of a detected fault A CSS fault induced by interrupting a network connection must be detected, accurately diagnosed, and logged.
ESN-0830#A	This requirement is verified through test. The ESN shall have the capability to detect and report communications related errors and events both locally and at the ESN network management facility. An ISS fault induced by interrupting a network connection must be detected, accurately diagnosed, logged and reported locally and at the SMC.
ESN-0840#A	This requirement is verified through test. The ESN shall have error reporting, event logging and generation of alerts. A CSS fault induced by interrupting a network connection must be reported and logged in the event log file and alerts generated.
ESN-0900#A	This requirement is verified through test. Errors and events to be detected shall include at least: a. communications software version or configuration errors b. communications hardware errors c. protocol errors d. performance degradation conditions e. telecommunications errors and failures CSS faults induced by interrupting a telecommunication connection, network connection, or configuration error must be reported and logged in the event log file and alerts generated. This test does not test item d of the requirement

ESN-0910#A	This requirement is verified through test. The ESN fault management shall provide the capability to perform the following functions, at a minimum, both locally and at the ESN network management facility: a. set, view, and change alert threshold values b. enable and disable alert notifications (alarms) within a system c. enable and disable event reports within a system d. manage error and event logging files The MSS Monitor/Control Service will be used to set fault thresholds, enable/disable alarms and reports caused by CSS faults and schedule the transfer of fault management data to the SMC.
ESN-0920#A	This requirement is verified through inspection. The ESN shall provide a set of utilities to perform diagnostic and testing functions for purposes of fault isolation. The MSS Fault Management Application Service will provide utilities to perform diagnostics and testing of connectivity between ECS hosts and router, the ability to reach hosts and routers, and the availability of network services at hosts.
ESN-1000#A	This requirement is verified through demonstration. The ESN network management function shall have the capability to build histories for different types of errors and events, and the capability to analyze errors and recommend corrective action wherever practical. The MSS Fault Management Application Service will demonstrate the ability to build histories for different types of errors and events detected, for the purpose of analysis.
ESN-1010#A	This requirement is verified through test. The ESN shall provide, for selective use as a debugging aid, the capability to perform packet tracing of its supported protocols. This requirement is verified during Integration and Test and is not verified during this test.
NSI-0030#A	This requirement is verified through test. NSI shall have the capability of sending and ECS shall have the capability of receiving notification of faults in NSI's network that may affect the quality of NSI services between ECS and its users. The Tester will send a fault notification message across the NSI.
NSI-0040#A	This requirement is verified through test. NSI shall make available to ECS information regarding fault status and estimated time to repair or resolve NSI faults that may affect the quality of NSI services between ECS and its users. The MSS will receive notification of NSI faults.
NSI-0050#A	This requirement is verified through test. NSI shall provide ECS with periodic summary information about faults that may have affected the quality of NSI services between ECS and its users. The MSS will receive periodic summary information about NSI faults.

Step-By-Step Procedures		
Step No.	**Input Action / Expected Results**	**Pass / Fail / Comments**
Communications Hardware Fault		
10	Computer Operator: Logon the MSS server workstation.	
15	Expected Results: MSS server workstation is available.	
20	Computer Operator: Initialize HP OpenView using the <ovw &> command.	
30	Expected Results: A map depicting the overall topology is displayed.	
40	Computer Operator: Double click on the EDC icon.	
50	Expected Results: A map depicting the EDC DAAC configuration is accurately displayed with all symbols displayed in green.	
60	Computer Operator: Prepare to send an EMAIL message of considerable length (20 pages or more) to another DAAC.	
70	Tester: Instruct the Computer Operator to send the EMAIL message, wait approximately 2 seconds then remove power from the FDDI concentrator.	
80	Expected Results: a. The FDD Concentrator symbol is red b. Audible alarm sounds c. The fault is logged in the error log file d. The fault is forwarded to the SMC	
90	Computer Operator: Double click on the red FDDI concentrator symbol.	
100	Expected Results: Information accurately describing the fault is displayed.	
110	Computer Operator: Close the window for the FDDI concentrator	
120	Tester: Restore power to the FDDI concentrator.	
130	Expected Results: The FDDI concentrator symbol is green.	
140	Computer Operator: Verify the fault is accurately logged and described in the error log file.	
Network Communications Fault		
150	Tester: Disconnect the LAN cable from the ingest server.	
160	Expected Results: a. The ingest server symbol is red b. Audible alarm sounds c. The fault is logged in the error log file d. The fault is forwarded to the SMC	
170	Computer Operator: Double click on the red ingest server symbol.	
180	Expected Results: Information accurately describing the fault is displayed.	

190	Computer Operator: Close the window for the ingest server.	
200	Tester: Restore the ingest server LAN connection.	
210	Expected Results: The ingest server symbol is green.	
220	Computer Operator: Verify the fault is accurately logged and described in the error log file.	
Communication Configuration Fault		
230	Tester: Change the IP address of one data management server.	
240	Expected Results: a. The data management server symbol is red b. Audible alarm sounds c. The fault is logged in the error log file d. The fault is forwarded to the SMC	
250	Computer Operator: Double click on the red data management server symbol.	
260	Expected Results: Information accurately describing the fault is displayed.	
270	Computer Operator: Close the window for the data management server.	
280	Tester: Restore the data management server IP address.	
290	Expected Results: The data management server symbol is green.	
300	Computer Operator: Verify the fault is accurately logged and described in the error log file.	
Histories		
310	Computer Operator: Initiate the MSS Fault Management Application Service.	
320	Expected Result: The MSS Fault Management Application Service appears on the screen.	
330	Computer Operator: Using the MSS Fault Management Application Service, build a history for all communications faults for today's date.	
340	Expected Results: The MSS Fault Management Application Service displays a history of all communications faults produced by this test.	
Fault Management		
350	Computer Operator: Initiate the MSS Monitor/Control Service.	
360	Expected Result: The MSS Monitor/Control Service application appears on the screen.	
370	Computer Operator: Change threshold values managed resources.	
380	Expected Result: The MSS Monitor/Control Service accepts valid threshold value changes.	
390	Computer Operator: Change the enable/disable alert status of managed resources.	

400	Expected Result: The MSS Monitor/Control Service accepts changes to the enable/disable alert status of managed resources.	
410	Computer Operator: Exit the MSS Monitor/Control Service.	
420	Computer Operator: Initiate the MSS Fault Management Application Service.	
430	Expected Result: The MSS Fault Management Application Service appears on the screen.	
440	Computer Operator: Configure the application to display all fault categories.	
450	Expected Result: A list of all managed resources is displayed.	
460	Computer Operator: Change the enable/disable fault notification status of at least two managed resources.	
470	Expected Result: The MSS Fault Management Application Service accepts the changes.	
Data Reduction and Analysis Steps:		
Signature:		**Date:**

8.6.1.4 Trouble Ticketing

TEST Procedure No.: A080610.060$E	**Date Executed:**	**Test Conductor:**
Title: Trouble Ticketing		
Objective: This test verifies the ability to submit a trouble ticket.		

Requirements	**Acceptance Criteria**
SMC-8860#A	This requirement is verified through test. The SMC shall have the capability to generate detailed and summary fault management reports describing the fault management of ground resources, including, at a minimum: a. Fault type and description b. Time of occurrence of fault c. Effect on system d. Status of fault resolution e. Fault statistics The Trouble Ticketing Service must have a graphical user interface to support the entry and editing of trouble tickets.

Test Inputs:

Data Set Name	**Data Set ID**	**File Name**	**Description**	**Version**

Step-By-Step Procedures		
Step No.	**Input Action / Expected Results**	**Pass / Fail / Comments**
10	DAAC User Services Representative: Upon realization that a problem exists, selects the Trouble Ticket icon from the ECS Desktop.	
20	Expected Results: ECS Desktop invokes user-preferred browser with Trouble Ticketing home page URL.	
30	DAAC User Services Representative: Views Trouble Ticketing HTML home page options.	
40	Expected Results: Options: Submit TT, List TTs are displayed on the screen.	
50	DAAC User Services Representative: Selects the Submit Option.	
60	Expected Results: The system calls the Trouble Ticket Submit page. The system automatically retrieves user information from database. (e.g., e-mail address, name, phone number, etc.).	
70	DAAC User Services Representative: Enters problem impact, problem short description, and problem long description. When satisfied with the entry, clicks on the submit button to submit TT.	
80	Expected Results: The system creates new entry in Remedy, notifies Operations Supervisor, displays successful submission HTML page (except for internal submissions) which includes the TT number, and notifies User via e-mail which also includes the TT number.	
90	DAAC User Services Representative: Receives e-mail verifying that the TT was submitted.	
100	Expected Results: An e-mail message receipt notification pop-up window is displayed on the screen. The system notifies the Operations Supervisor of the new Trouble Ticket.	
110	Operations Supervisor: Refreshes TT list to check for most recent TTs.	
120	Expected Results: The system (Remedy) refreshes list.	
130	Operations Supervisor: Selects TT for work and opens it.	
140	Expected Results: The system (Remedy) opens TT.	
150	Operations Supervisor: On examining the detailed information, changes the value of Ticket Status from New to Assigned.	
160	Expected Results: The system displays the Options: Assigned, Forwarded.	
170	Operations Supervisor: Assigns the value of Low to the Assigned-Priority field.	
180	Expected Results: The system displays the Options: Low, Medium, High)	
190	Operations Supervisor: Assigns the Trouble Ticket to a particular Computer Operator to fix the problem and clicks on **Apply** to carry out these new changes.	

200	Expected Results: The system (Remedy) delivers e-mail to the Computer Operator.	
210	Computer Operator: Receives e-mail notifying him/her of the assignment.	
220	Expected Results: An e-mail message receipt notification pop-up window is displayed on the screen.	
230	Computer Operator: Inputs an initial entry into the Resolution Log (which is a free text diary) indicating the proposed course of action.	
240	Expected Results: The Resolution Log displays the initial entry.	
250	Computer Operator: Then clicks on **Apply** to update the TT with this status.	
260	Expected Results: The system (Remedy) updates TT.	
270	Computer Operator: Analyzes and attempts to resolve the issue that the TT addresses, then updates the Resolution Log with pertinent information. Each update to the Resolution Log is followed by a click on the Apply button to commit the update.	
280	Expected Results: The system (Remedy) updates Resolution Log with time/date, name of modifier and current log.	
290	Computer Operator: After finding a solution, changes the Ticket Status to **Solution Proposed**	
300	Expected Results: The system displays the Options: Solution Proposed.	
310	TT Review Board: Compiles a package of new "Solution Proposed" TTs for review by the board. Considers the sensibility and long term effects of the proposed solution for this TT. Approves the solution and changes the Status to **Implement Solution**.	
320	Expected Results: Options: Forwarded, Closed, Implement Solution are displayed on the screen.	
330	Computer Operator: Fixes the problem and changes Status to **Solution Implemented**.	
340	Expected Results: The problem is corrected and the new status displayed on the screen is **Solution Implemented**.	
350	TT Review Board: Approves fix select **Key Words**, **Closing Code**, **Hardware Resource**, and/or **Software Resource** values as applicable, and upon User Verification Closes TT.	
360	Expected Results: The trouble ticket is closed.	
370	Computer Operator: Sends e-mail to the DAAC User Services Representative notifying him/her of the TT being closed.	
380	Expected Results: An e-mail message receipt notification pop-up window is displayed on the screen.	
Data Reduction and Analysis Steps:		
Signature:		**Date:**

8.6.1.5 Non Conformance Report

TEST Procedure No.: A080610.070$S	**Date Executed:**	**Test Conductor:**
Title: Non Conformance Report		
Objective: This test verifies the ability of recording and reporting of a software problem.		

Requirements	**Acceptance Criteria**
SMC-8860#A	This requirement is verified through test. The SMC shall have the capability to generate detailed and summary fault management reports describing the fault management of ground resources, including, at a minimum: a. Fault type and description b. Time of occurrence of fault c. Effect on system d. Status of fault resolution e. Fault statistics The Trouble Ticketing Service must have a graphical user interface to support the entry and editing of trouble tickets.

Test Inputs:

Data Set Name	**Data Set ID**	**File Name**	**Description**	**Version**

Step-By-Step Procedures		
Step No.	**Input Action / Expected Results**	**Pass / Fail / Comments**
10	DAAC User Services Representative: Takes a call (or E-mail) reporting a software defect and clicks on the Trouble Ticketing tool icon on his desktop.	
20	Expected Results: Trouble Ticketing application starts up.	
30	DAAC User Services Representative: Fills in items in Trouble Ticket (e.g., application, platform, version, description, user information and E-mail address etc.) based on User's inputs. Rep confirms items with user, and submits ticket. For E-mail correspondence, a message is sent to the user with this information.	
40	Expected Results: Application submits the ticket to Remedy.	
50	DAAC User Services Representative: Regularly monitors trouble ticket status and notifies user when problem is resolved.	
60	Expected Results: Application notifies user when resolution is implemented.	
Data Reduction and Analysis Steps:		
Signature:		**Date:**

8.6.2 Security Management Sequence

This sequence provides the guidance in verifying the LSM's capabilities for establishing and maintaining security management data bases and for site-level security activities. This sequence verifies the LSM site-level abilities related to physical security password management, operational security, data security, privileges, and security compromise mitigation. The presence of system-level services for access control, authentication of user credentials is confirmed. Countermeasures for security threats such as unauthorized modification of data, disclosure of authentication information, denial of authorized service, and impersonation of authentication information, are also confirmed. Authentication, access control, data integrity, and data confidentiality protection functions are confirmed and evaluated against system and site requirements. Event functions (detection, reporting, and logging) are demonstrated and confirmed by comparison with system and site requirements.

Configuration: The subsystem needed to perform this sequence of tests are as follows. CSS/MSS, INS & ISS.

External Interfaces: The external interface (i.e. other ECS sites and data sources) needed for this sequence (both real and simulated) is listed:

SMC

Operator Position(s): The operator positions from the ECS Maintenance and Operations Position Descriptions document (607/OP2) needed to support this sequence are listed:

DAAC Resource Manager

DAAC Computer Operator

Operational Scenario(s): The operations scenario, taken from the Operations Scenarios for the ECS Project: Release-A document (605/OP1), that was used to develop tests in this sequence of tests are listed:

Security Management Login Failure Scenario (Section 3.6.1)

Test Dependencies: There are no test dependencies needed for this sequence of tests.

8.6.2.1 SMC Security Functions

This test procedure is not applicable for the EDC Volume of the Acceptance Test Procedures document for Release A.

8.6.2.2 LSM Security Functions

TEST Procedure No.: A080620.040$E	**Date Executed:**	**Test Conductor:**
Title:	LSM Security Functions	
Objective:	The objective of this test is to verify the LSM security functions; such as maintaining, authenticating, and monitoring user and device accesses and privileges; performing security testing that includes, password auditing and site internal access/privileges checking; performing compromise detection (e.g. virus or worm penetration); and performing risk detection and analyses.	

Requirements	**Acceptance Criteria**
EOSD2400#A	This requirement is verified through test. ECS shall provide multiple categories of data protection based on the sensitivity levels of ECS data, as defined in NHB 2410.9. The system must control access to archived data to prevent unauthorized access. The system must authenticate that the interactive user is authorized.
EOSD2510#A	This requirement is verified through demonstration. ECS elements shall maintain an audit trail of: a. All accesses to the element security controlled data b. Users/processes/elements requesting access to element security controlled data c. Data access/manipulation operations performed on security controlled data d. Date and time of access to security controlled data e. Unsuccessful access attempt to the element security controlled data by unauthorized users/elements/processes f. Detected computer system viruses and worms g. Actions taken to contain or destroy a virus The CSS Security service must provide the capability to log audit information into security logs whenever authentication and authorization services are used. The audit information must contain the following: a. Date and time of the event b. User name c. Type of event d. Success or failure of the event e. Origin of the request.

EOSD2550#A	This requirement is verified through test. The ECS elements shall limit use of master passwords or use of a single password for large organizations requiring access to a mix of security controlled and non-sensitive data. The System must require a unique user identification and password for each individual user.
EOSD2650#A	This requirement is verified through test. The LSM shall report detected security violations to the SMC. The LSM must contact the SMC in the event of a security violation via electronic mail or telephone.
EOSD2710#A	This requirement is verified through demonstration. ECS elements shall report all detected computer viruses and actions taken to the SMC. The System must provide virus detection services. The LSM must report detected security violations to the SMC.
ESN-0010#A	This requirement is verified through test. ESN shall provide the following standard services: a. Data Transfer and Management Services b. Electronic Messaging Service c. Remote Terminal Service d. Process to Process Communication Service e. Directory and User Access Control Service f. Network Management Service g. Network Security and Access Control Service h. Internetwork Interface Services i. Bulletin Board Service The Tester must verify the various LSM security functions. This test does NOT verify parts a, b, c, d, e, f, h, and i of the requirement.
ESN-0650#A	This requirement is verified through test. The ESN shall perform the following network management functions for each protocol stack implemented in any ECS element, and each communications facility: a. Network Configuration Management b. Network Fault Management c. Network Performance Management d. Network Security Management The CSS Security service must provide the capability to create/modify/delete user accounts and privileges in the security registry. The CSS Security service must provide the capability to define/modify/delete group information in the security registry. This test does NOT verify parts a, b and c of the requirement.
ESN-1380#A	This requirement is verified through test. The ESN shall provide countermeasures for the following security threats related to data communications: a. modification of data (i.e., manipulation) while in transit over the network b. disclosure of authentication information c. degradation in network or processing resource performance through denial of service attack d. Impersonation of authentication credentials or authorization privileges. The CSS Security service must provide an API to check the

	authorization privileges of principals to access/control services/resources. The CSS Security service must support the Data Encryption Standard (DES) to encrypt and decrypt data.
ESN-1400#A	This requirement is verified through test. The following security functions and services, at a minimum, shall be provided: a. authentication b. access (authorization) control c. data integrity d. data confidentiality. The CSS Security service must provide an API to check the authorization privileges of principals to access/control services/resources. The CSS Security service must support the Data Encryption Standard (DES) to encrypt and decrypt data.
ESN-1430#A	This requirement is verified through test. The ESN shall provide the following security event functions: a. Event detection b. Event reporting c. Event logging. CSS Event Logger Service must provide capability to record security event and history data to an application specific log file.
IMS-1665#A	This requirement is verified through demonstration. The IMS shall provide to the SMC, IMS services usage by each user (to include at a minimum user name, IMS service identification, date/time stamp, time expended, facilities used) for later reporting and determination of access patterns. The GTWAY CI must log Service requests. The GTWAY CI must log the termination or successful completion of service requests. The log must provide IMS services usage by each user (to include at a minimum user name, IMS service identification, date/time stamp, time expended, facilities used).
NSI-0070#A	This requirement is verified through test. NSI shall have the capability of sending and ECS shall have the capability of receiving notification of security breaches at NSI sites or within the NSI network that could potentially affect ECS sites. The Tester must receive NSI security breach notifications.
NSI-0080#A	This requirement is verified through test. ECS shall have the capability of sending and NSI shall have the capability of receiving notification of security breaches at ECS facilities that could affect NSI and other EOSDIS sites. The Tester must sent ECS security breach notifications to the NSI.
SMC-5335#A	This requirement is verified through test. The LSM shall perform security testing that includes, at a minimum, password auditing and element internal access/privileges checking. The MSS site Security Management Application Service must have the capability to perform the following types of security tests: a. password auditing b. file system integrity checking c. auditing of user privileges d. auditing of resource access control information.

SMC-5345#A	This requirement is verified through inspection. The LSM shall perform compromise (e.g., virus or worm penetration) risk analysis, and detection. The System must provide virus detection services.
SMC-5355#A	This requirement is verified through test. The LSM shall isolate the compromised area, detach the compromised input I/O, and the compromised areas output I/O until the compromise has been eliminated. The MSS site Security Management Application Service must, upon the detection of a compromise, isolate the compromised input I/O, and the compromised area's output I/O until the compromise has been eliminated.
SMC-5365#A	This requirement is verified through test. The LSM shall generate recovery actions in response to the detection of compromises. The MSS Security Management Application Service must provide office automation support tools to enable the generation of directives and instructions for recovery from detected security events.
SMC-6325#A	This requirement is verified through demonstration. The LSM shall perform, as needed, data and user audit trails within its element. The LSM must have the ability to perform data and user audit trails within its element.
Test Inputs: Authorized/Approved user id and password	

Step-By-Step Procedures		
Step No.	**Input Action / Expected Results**	**Pass / Fail / Comments**
10	Resource Manager: Verifies the existence of virus detection software.	
20	Expected Results: The virus detection software is installed and operational on the system.	
30	Computer Operator: Executes a security administrator logon.	
40	Expected Results: The system displays the security administrator main menu.	
50	Computer Operator: Performs create, change and delete commands to the security registry.	
60	Expected Results: User accounts are created, changed and deleted.	
70	Computer Operator: Verifies that the user accounts contain username, password, group and user identification code, login directory and command line interpreter.	
80	Expected Results: User accounts reflect create, change and delete commands entered by the Computer Operator.	
90	Computer Operator: Logs off.	
100	Expected Results: The system displays the logon screen.	
110	Computer Operator: Executes logon with user id.	
120	Expected Results: The system displays the main menu.	
130	Computer Operator: Performs, create, change and delete commands to the security registry.	
140	Expected Results: The user accounts are created, changed and deleted from the system.	
150	Computer Operator: Verify that modifications are reflected in the user accounts.	
100	Expected Results: User accounts reflect create, change and delete commands entered by the Computer Operator.	
110	Computer Operator: Logs off.	
115	Expected Results: The ECS login screen is displayed on the screen.	
120	Computer Operator: Using SATAN and CRACK, attempts to log in by guessing passwords. Repeat multiple times.	
130	Expected Results: The security management service detects the multiple events after the preestablished threshold has been crossed. The service sends notification of security alert to the Computer Operator.	
140	Computer Operator: Receives multiple security alerts. Begins investigation into cause of alerts by invoking the events browser (log) to retrieve the security events.	

150	Expected Results: Displays the requested events. The information must contain the following: a. Date and time of the event b. User name c. Type of event d. Success or failure of the event e. Origin of the request	
160	Computer Operator: Discovers that the login attempts on the multiple hosts originated from the same area.	
170	Computer Operator: Contacts the MIS manager at the location of the User (Hacker) who proceeds to have the issue investigated locally. Sends e-mail to all ECS sites informing them of the event and to explicitly deny access from this area.	
180	Computer Operator: Modifies the network security authorization databases to deny all incoming accesses from the host in question.	
190	1st Authorized/Approved User: Logs on to ECS using a valid user id and password.	
200	Expected Results: The user is able to log onto the system. The next user screen appears.	
210	Tester: Using a network analyzer, verifies that the password is not readable over the network.	
220	2nd Authorized/Approved User: Attempts to log on to ECS using the same valid user id and password used by the 1st Authorized/Approved User in step 190.	
230	Expected Results: The user is unable to log onto the system. A message indicating the user is already logged on is displayed.	
240	1st Authorized/Approved User: Compromises the data by deleting files.	
250	Expected Result: The system detects the compromise, isolates it, until it can be eliminated.	
260	Computer Operator: Discovers that the security violation compromise.	
270	Computer Operator: Using the Office Automation tools provided, generates instructions for recovery from the detected security event.	
Data Reduction and Analysis Steps:		
Signature:		**Date:**

8.6.3 Accounting and Accountability Sequence

This sequence guides the evaluator through and assessment of the ECS and EDC capability to perform compliant accounting and accountability functions. The ECS ability to establish, maintain, and update data tracking systems to track data transport from ECS input to ECS output, and to allow statusing of all product-production activities is confirmed by inspection of outputs.

Configuration: The subsystem needed to perform this sequence of tests are as follows. CSS/MSS, INS & ISS.

External Interfaces: The following external interfaces (i.e. other ECS sites and data sources) needed for this sequence (both real and simulated) are listed below.

ECS Client

Operator Positions(s): The operator position from the ECS Maintenance and Operations Position Descriptions document (607/OP2) needed to support this sequence is listed:

Computer Operator

Operational Scenario(s): The operations scenarios, taken from the Operations Scenarios for the ECS Project: Release A document (605/OP1), that was used to develop tests in this sequence of tests:

Network Data Distribution (Pull) Scenario (Nominal) Scenario, Section 3.11.

Accountability Management Create User Account Scenario, Section 3.6.2

Test Dependencies: There are no test dependencies needed for this sequence of tests.

8.6.3.1 Accountability: Data Tracking and Audit Trails

This test procedure is not applicable for the EDC Volume of the Acceptance Test Procedures document for Release A.

8.6.3.2 LSM Data Tracking

TEST Procedure No.: A080630.030$E	**Date Executed:**	**Test Conductor:**
Title:	LSM Data Tracking	
Objective:	This procedure verifies the ECS's ability to manage user accounts, track production activities, and to manage the configuration of system HWCI and CSCI elements.	

Requirements	**Acceptance Criteria**
SMC-5325#A	This requirement is verified through test. The LSM shall promulgate, maintain, authenticate, and monitor user and device accesses and privileges. A new approved user account must be added to the system including all account attributes, privileges, resource access. Account information must be available for review and modification.
SMC-6315#A	This requirement is verified through demonstration. The LSM must perform, as needed, security audit trails within its element. The MSS MUI must display a log of all activities for a user account and access attempts.

SMC-6335#A	This requirement is verified through demonstration. The LSM shall perform, as needed, maintain and update a data tracking system that, at a minimum: a. Tracks data transport from element input to element output. b. Allows the status of all product-production activities to be determined. The ECS data tracking system must list data transport activities and provide status of all product-production activities.
SMC-6345#A	This requirement is verified through demonstration. The LSM shall, as needed, perform configuration accountability to include, at a minimum, the audit of hardware and software resources within its element. The MSS configuration management application service must identify a particular software element whose version varies from the operational baseline.

Step-By-Step Procedures		
Step No.	**Input Action / Expected Results**	**Pass / Fail / Comments**
User Accountability Test		
10	Computer Operator: Login to the MSS server workstation using a valid ID and password as an administrator.	
20	Expected Results: Access to the MSS Server is available.	
30	Computer Operator: Using the MSS Security Management Application Service GUI, create a user account with the following attributes: a. user name b. password c. group identification code d. user identification code e. login directory f. resource access privileges	
40	Expected Results: The new user account is accepted by the system.	
50	Tester: Login as a remote user using the user name and password created in step 30.	
60	Expected Result: The user is logged onto the ECS and the search and order tool appears on the users screen.	
70	Tester: Logoff as a remote user.	
80	Expected Results: The login screen appears.	
90	Tester: Attempt to remote login to the ECS using an invalid password.	
100	Expected Result: The login attempt is denied.	
110	Tester: Attempt to repeat step 90 five times.	
120	Expected Result: Attempts to login are limited to five tries.	
130	Computer Operator: Using the MSS accountability management service MUI, view the activities log associated with the new user.	
140	Expected Results: The log should show one login for the new user and five unsuccessful attempts to login.	
Configuration Accountability Test		
150	Computer Operator: Using the configuration management application service, view the configuration of controlled resources that comprise the site's operational baseline.	
160	Expected Results: There are no variations from the operational baseline.	
150	Tester: Remove a printer from the site configuration. Remove a software application from the site configuration.	
160	Expected Results: The configuration management application service identifies the variants from the site operational baseline.	

170	Tester: Re-install the printer in the site configuration. Re-install the removed software into the site configuration.	
180	Expected Results: The configuration management application service shows no variations from the site's operational baseline.	
190	Computer Operator: Logoff of the system.	
200	Expected Results: The UNIX prompt appears.	
Data Reduction and Analysis Steps:		
Signature:		**Date:**

TP21JNOV95 ***ECS***

8.6.4 Report Generation Sequence

This sequence guides the evaluator in assessing ECS capability for performing the EDC report generation required for Release A. This report generator can produce standard or customized outputs for a full range of inputs, such as a functional allocation report giving the current allocation of ground segment functions; summary configuration status reports; summary training reports; hardware configuration, system and scientific software reports; spares and consumables reports; lists of proposed enhancements; detailed and summary reports indicating the overall performance of the ECS Maintainability Status Reports; product generation status reports; ground resources performance reports; user feedback analysis reports; fault management reports; and security compromise reports. The report generators at EDC are evaluated through inspection of output products and comparison of the products against site reporting requirements.

Configuration: The subsystem needed to perform this sequence of tests are as follows. CSS/MSS, INS & ISS.

External Interfaces: The external interfaces (i.e. other ECS sites and data sources) needed for this sequence (both real and simulated) are listed :

SMC

Operator Position(s): The operator positions from the ECS Maintenance and Operations Position Descriptions document (607/OP2) needed to support this sequence are listed:

DAAC Operations Supervisor

DAAC Production Monitor

DAAC Computer Operator

Operational Scenario(s): There are no operations scenarios taken from the Operations Scenarios for the ECS Project: Release-A document (605/OP1) used during this sequence of tests.

Test Dependencies: The following table identifies the test procedure(s) in a sequence of tests that should be run prior to or concurrently with a sequence or test procedure.

Test Procedure No.	Site/Procedure No.	Comments
A080640.030$E	A080640.030$S	prior

8.6.4.1 SMC Report Generator

This test procedure is not applicable for the EDC Volume of the Acceptance Test Procedures document for Release A.

8.6.4.2 LSM Report Generator

TEST Procedure No.: A080640.030$E	**Date Executed:**	**Test Conductor:**
Title:	LSM Report Generator	
Objective:	Demonstrate the existence and the capabilities of a site-specific report generator residing within the site configuration, and the capability to generate pre-defined reports.	

Requirements	Acceptance Criteria
SMC-8305#A	This requirement is verified through test. The LSM shall have the same report generator capability as for the SMC, except it shall be limited to generating reports covering only its particular site or its particular element. The Production Monitor-QA tests that the system provides the capability of a site report generator and that input data sets are available for report access.
SMC-8705#A	This requirement is verified through test. The LSM shall have the capability to generate the same types of reports listed under the SMC report generation service, except that each report covers only its particular site or its particular element. The Tester tests that the system provides the capability and use of a site report generator to produce standard reports.
SMC-8710#A	This requirement is tested at the SMC and is verified through test. The SMC shall have the capability to generate summary configuration status reports that includes, at a minimum: a. Current status of all hardware, system and scientific software b. Reason why an item is not currently operational. A report is generated with summary information showing the site inventory of hardware, system and scientific software, and spares and consumables. Information generated at the SMC will be accessed for use in this test procedure.
SMC-8750#A	This requirement is semi-automated at the SMC for this release, and is verified through analysis. The SMC shall have the capability to generate detailed and summary training reports, including, at a minimum a. Training programs b. Training course schedules c. Training course contents d. Training course locations e. Training attendees A report is generated that has detailed and summary information on training programs, training course schedules, training course contents, training course locations, and training attendees. Information generated at the SMC will be accessed for use in this test procedure.

ESN-0760#A	This requirement is verified through test. The ESN report generation function shall provide, on an interactive and scheduled basis, accounting, network configuration, fault and performance management information. The Tester tests that the system provides the capability to report information concerning accounting, network configuration, and fault and performance management.
ESN-0770#A	This requirement is verified through test. The ESN query capability shall generate ad hoc statistics and reports based on parameters entered. The Tester tests that the system provides the capability and use of a site report generator to produce communication reports based on the entered parameters.
ESN-0775#A	This requirement is verified through test. The ESN management service shall have the capability to redirect its reports to different devices such as console, disk or printer. The Tester displays the steps involved in producing standard or customized reports through use of the site report generator, from user request through output to selected media.
SMC-8770#A	This requirement is satisfied at the SMC, and his requirement is verified through test. The SMC shall have the capability to generate, at a minimum, detailed and summary reports showing the inventory of: a. Hardware, system, and scientific software b. Spares and consumables A report is generated composed of summary information showing the site inventory of hardware, system and scientific software, and spares and consumables. Information generated at the SMC will be accessed for use in this test procedure.
SMC-8790#A	This requirement is satisfied at the SMC and this requirement is verified through analysis. The SMC shall have the capability to generate, as necessary, a list of proposed enhancements with at least these elements: a. Proposal name b. Description of enhancement c. Rationale d. Impacts e. Costs f. Milestone schedule A report is generated containing information showing site proposed enhancements with a proposal name, description of enhancement, rationale, impacts, costs, and milestone schedule. Information generated at the SMC will be accessed for use in this test procedure.
SMC-8800#A	This requirement is performed at the SMC using the office automation tools. This requirement is verified through test. The SMC shall have the capability to generate detailed and summary reports indicating the overall performance of the ECS. At a minimum, they include:

	a. Scheduled versus actual data collection, processing, retrieval, and delivery of routine data b. Scheduled versus actual data collection, processing, retrieval, and delivery of user requested data c. Reason(s) for failure to meet schedules d. Quality of the data e. Ground operations event execution f. Number of interactive user requests and timeliness of response g. User feedback The SMC must have the capability to produce standard or customized reports through use of the site report generator, from user requests through output to selected media. Information generated at the SMC will be accessed for use in this test procedure.
SMC-8820#A	This requirement is partially complied with at the SMC for this release, and is verified through test. The SMC shall have the capability to generate detailed and summary reports indicating the product generation status made in processing, reprocessing, and storage of all standard products. The SMC must have the capability to produce standard or customized reports through use of the site report generator, from user requests through output to selected media. Information generated at the SMC will be accessed for use in this test procedure.
SMC-8840#A	This requirement is performed at the SMC, and this requirement is verified through test. The SMC shall have the capability to generate detailed and summary reports indicating the performance of ground resources, including, at a minimum: a. Resource availability b. Reason for down time c. Resource utilization d. Ability of resource to meet performance criteria e. Short and long-term trend analysis and capacity planning results A report is generated showing the site performance of ground resources, including resource availability, reason for down time, resource utilization, the ability of resource to meet the performance criteria, and short and long-term trend analysis and capacity planning results. Information generated at the SMC will be accessed for use in this test procedure.
SMC-8841#A	This requirement is performed at the SMC using the office automation tools. This requirement is verified through test. The SMC shall have the capability to generate detailed and summary user feedback analysis reports describing the results of analyzing user satisfaction queries, including, at a minimum: a. User information b. Type of transaction c. Satisfaction statistics d. User recommendations e. SMC recommendations

	The SMC must have the capability to produce standard or customized reports through use of the site report generator, from user requests through output to selected media. Information generated at the SMC will be accessed for use in this test procedure.
SMC-8860#A	This requirement is performed at the SMC using the office automation tools. This requirement is verified through test. The SMC shall have the capability to generate detailed and summary fault management reports describing the fault management of ground resources, including, at a minimum: a. Fault type and description b. Time of occurrence of fault c. Effect on system d. Status of fault resolution e. Fault statistics A report is generated showing the site fault management reports describing the fault management of ground resources, including, fault type and description, time of occurrence of fault, effect on system, status of fault resolution, and fault statistics. Information generated at the SMC will be accessed for use in this test procedure.
SMC-8880#A	This requirement is performed at the SMC. Capabilities d, e, and g are performed by the M&O staff which generates reports using the office automation tools. Rest is automated. This requirement is verified through test. The SMC shall have the capability to generate detailed and summary security compromise reports indicating security compromises of ground resources and facilities, including, at a minimum: a. Security compromise type and description b. Time of occurrence c. Cause of security compromise d. Impact on system e. Status of security compromise resolution f. Security compromise statistics g. Results of security compromise risk analysis A report is generated showing the site security compromise reports indicating security compromises of ground resources and facilities, including, security compromise type and description, time of occurrence, cause of security compromise, impact on system, status of security compromise resolution, security compromise statistics, and results of security compromise risk analysis. Information generated at the SMC will be accessed for use in this test procedure.

Test Inputs: Specifications for the as-built report generator for the LSM.

Data Set Name	Data Set ID	File Name	Description	Version

Step-By-Step Procedures		
Step No.	**Input Action / Expected Results**	**Pass / Fail / Comments**
10	Production Monitor-QA: Verify that there is a fully operational site computer configuration.	
20	Production Monitor-QA: Verify that the site report generator and input data sets are available for access.	
30	Expected Results: Data sets representative of the full range of data types are available to be operated on by the report generator.	
40	Production Monitor-QA: Request use of the site report generator to produce a standard report.	
50	Expected Results: Display of steps involved in producing standard or customized reports through use of the site report generator, from user request through output to selected media.	
60	Production Monitor-QA: Define a report that generates detailed and summary information on training programs, training course schedules, training course contents, training course locations, and training attendees.	
70	Expected Results: Output includes a complete demonstration report that compares with the expected information.	
80	Production Monitor-QA: The output format is evaluated for correctness as well as readability and satisfactory presentation.	
90	Production Monitor-QA: Define a report that generates summary information showing the site inventory of hardware, system and scientific software, and spares and consumables.	
100	Expected Results: Output includes a complete demonstration report .	
110	Production Monitor-QA: The output format is evaluated for correctness as well as readability and satisfactory presentation.	
120	Production Monitor-QA: Define a report that generates information showing site proposed enhancements with a proposal name, description of enhancement, rationale, impacts, costs, and milestone schedule.	
130	Expected Results: Output includes a complete demonstration report .	
140	Production Monitor-QA: The output format is evaluated for correctness as well as readability and satisfactory presentation.	
150	Production Monitor-QA: Define a report that generates information showing the site performance of ground resources, including resource availability, reason for down time, resource utilization, the ability of resource to meet the performance criteria, and short and long-term trend analysis and capacity planning results.	

160	Expected Results: Output includes a complete demonstration report .	
170	Production Monitor-QA: The output format is evaluated for correctness as well as readability and satisfactory presentation.	
180	Production Monitor-QA: Define a report that generates information showing the site fault management reports describing the fault management of ground resources, including, fault type and description, time of occurrence of fault, effect on system, status of fault resolution, and fault statistics.	
190	Expected Results: Output includes a complete demonstration report .	
200	Production Monitor-QA: The output format is evaluated for correctness as well as readability and satisfactory presentation.	
210	Production Monitor-QA: Define a report that generates information showing the site security compromise reports indicating security compromises of ground resources and facilities, including, security compromise type and description, time of occurrence, cause of security compromise, impact on system, status of security compromise resolution, security compromise statistics, and results of security compromise risk analysis.	
220	Expected Results: Output includes a complete demonstration report .	
230	Production Monitor-QA: The output format is evaluated for correctness as well as readability and satisfactory presentation.	
240	Production Monitor-QA: Each of the previous report demonstrations is evaluated for adherence to report format and content specifications.	
250	Expected Results: The outputs include completed demonstration reports that compare expected versus actual outputs.	

Data Reduction and Analysis Steps:

A fully operational SMC computer configuration is required, ready to produce the specified reports including input data sets that are representative of nominal and special cases for each of the required report formats.

A. Evaluating report capabilities include generation of:

1. a functional allocation report giving the current allocation of ground segment functions;
2. summary configuration status reports;
3. summary training reports;
4. hardware, system and scientific software reports;
5. spares and consumables reports;
6. ground resources performance reports;
7. fault management reports; and
8. security compromise reports.

Signature:	**Date:**

9. Push Scenario Group

The Push Scenario Test Group details the functions and capabilities that are handled by the EDC DAAC, including the process of planning for, and receiving Landsat L0R data from the Landsat-7 Ground System. This scenario verifies the ability of the EDC DAAC to perform early interface testing on the AM-1 instrument data sent by EDOS. This early interface testing involves ingesting, accounting for, and temporarily storing the Level 0 AM-1 instrument data.

9.1 Data Ingest, Validate, and Archive Scenario

The Data Ingest, Validate, and Archive Scenario carries the EDC DAAC operations staff through the process of planning for and receiving AM-1 Level 0 ASTER and MODIS data from EDOS. This scenario verifies the capability of the EDC DAAC to ingest, account for, and temporarily store the AM-1 Level 0 data.

9.1.1 Data Ingest, Process, and Archive at LaRC DAAC from SDPF Sequence

This sequence is not applicable to the ECS System Acceptance Test Procedures - Volume 5 EDC Procedures (411/VE1).

9.1.2 Data Ingest, Process, and Archive at MSFC DAAC from SDPF Sequence

This sequence is not applicable since the ingest and processing of LIS data will be handled at the LIS SCF. There is to be no acceptance testing of this functionality.

9.1.3 Early AM-1 Interface Test Support Sequence

The Early AM-1 Interface Test Support Sequence verifies that the EDC DAAC supports the interface testing of the AM-1 launch. This sequence verifies that the Level 0 MODIS and ASTER instrument data is ingested, validated, and temporarily stored at the EDC DAAC.

Configuration: The subsystems needed to perform this sequence of tests are as follows:

CSS, MSS, INS and DSS

External Interfaces: The external interfaces (i.e., other ECS sites and data sources) needed for a sequence (both real and simulated) are listed:

EDOS (simulated)

Operator Position(s): The operator positions from the ECS Maintenance and Operations Descriptions document (607/OP2) needed to support this sequence are listed:

DAAC Ingest/Distribution Technician

Operational Scenario(s): There are no operations scenarios taken from the Operations Scenarios for the ECS Project: Release-A (605/OP2) used during this sequence of tests.

Test Dependencies: There are no test dependencies needed for this sequence of tests.

9.1.3.1 AM-1 Data Ingest from EDOS at the LaRC DAAC

This test procedure is not applicable to the ECS System Acceptance Test Procedures - Volume 5 EDC Procedures (411/VE1).

9.1.3.2 AM-1 Data Ingest from EDOS at the GSFC DAAC

This test procedure is not applicable to the ECS System Acceptance Test Procedures - Volume 5 EDC Procedures (411/VE1).

9.1.3.3 AM-1 Data Ingest from EDOS at the EDC DAAC

TEST Procedure No.: A090130.030$E	**Date Executed:**	**Test Conductor:**
Title:	AM-1 Data Ingest from EDOS at the EDC DAAC	
Objective:	The purpose of this test is to verify that the EDC DAAC ingests MODIS Level 0 data from EDOS in support of early AM-1 interface testing. This procedure confirms that the EDC DAAC ingests, accounts for, and temporarily archives the AM-1 Level 0 data.	

Requirements	Acceptance Criteria
DADS0130#A	This requirement is verified through test. Each DADS shall receive from the EDOS and SDPF, at a minimum, the following: a. Production data (L0) b. Expedited data The INGST CI must provide the capability to periodically check a location accessible to the network for the presence of a Delivery Record. EDOS notifies the EDC DAAC on the availability of the AM-1 Level 0 production and expedited data. The DAAC Ingest/Distribution Technician verifies that notification is received from EDOS concerning the availability of the Level 0 data. This test procedure does not cover reference to “SDPF”. Reference to “SDPF” is covered in test procedures #A090110.010$L - CERES Data Receipt from SDPF to ECS/LaRC and #A090110.060$L - CERES Data Receipt from SDPF to ECS/LaRC (Fault).
DADS0250#A	This requirement is verified through test. Each DADS shall receive, at a minimum, data in the following forms: a. Physical electronic media b. Electronic communications networks c. Hardcopy media The INGST CI must provide the capability to electronically transfer data to be ingested into a specified EDC ECS DAAC location. This test procedure does not cover sub-letter (a). Sub-letter (a) is

	covered in test procedures #A090210.020$L and #A090210.020$G - Ingest, Validate, and Archive Migration Version 0 Data from the V0 DAAC. According to the requirement_interpretation, Release A only covers physical and electronic network. This test procedure does not cover sub-letter (c) - Hardcopy media.
DADS1070#A	This requirement is verified through test. The DADS shall send data check and storage status to the provider of ingest data. The EDC DAAC must send storage status to the provider of ingest data. The STMGT CI must check each Archive Status Request it receives for the correct type of data in all fields. Fields that must be checked include Current Request Identifier and Request Identifier of previous Insert or Retrieve Requests to be statused. This test procedure does not cover reference to “data check”. Reference to “data check” is covered in test procedures #A090210.020$L - Ingest, Validate, and Archive Migration Version 0 Data from the V0 DAAC, #A090210.050$L - Ingest, Validate, and Archive SAGE II Ancillary Data from the V0 DAAC, #A090210.040$L- Ingest, Validate, and Archive Migration Version 0 Documentation from the V0 DAAC, and #A090260.010$L - Ingest, Validate, and Archive NOAA ADC Ancillary Data at the LaRC DAAC, #A090310.050$L - CERES Standard and Browse Data Products QA Assessment Metadata Receipt/Processing at the LaRC DAAC, #A090210.020$G - Ingest, Validate, and Archive Migration Version 0 Data from the V0 DAAC, #A090210.030$G - Ingest, Validate, and Archive TOMS Ozone Ancillary Data from the V0 DAAC, #A090210.040$G - Ingest, Validate, and Archive Migration Version 0 Documentation from the V0 DAAC, #A090240.010$G - Ingest, Validate, and Archive VIRS, PR, TMI, and GV Data from TSDIS, #A090240.020$G - Ingest, Validate, and Archive VIRS, PR, TMI, and GV Data from TSDIS, #A090240.030$G - Ingest, Validate, and Archive VIRS, PR, TMI, and GV Data from TSDIS (Fault), #A090270.010$G - Ingest, Validate, and Archive NOAA ADC Ancillary Data, and A090430.010$G - Reprocessed Data Receipt at the GSFC DAAC from TSDIS.
DADS1080#A	This requirement is verified through test. Each DADS shall maintain a data receipt log. The DAAC Ingest/Distribution Technician verifies that the Ingest History Log is updated with the following information: - Request ID - Priority - Data Provider - Start Time - End Time - Completion Status - Restart Flag - Pre-Processing Time - Transfer Time - Archive Time - Number of Files - Number of Granules - Number of Successful Granules - Data Volume - Ingest Type
DADS2040#A	This requirement is verified through demonstration. Each DADS shall insure that data sent by EDOS and SDPF has been received and validated.

	The EDC DAAC must ensure that the MODIS Level 0 data is received from EDOS. The DAAC Ingest/Distribution Technician verifies that the Ingest History Log reflects all of the AM-1 Level 0 data ingested from EDOS. This test procedure does not cover references to “SDPF” and “validated”. Reference to “shall ensure that data sent by SDPF has been received and validate” are covered in test procedures #A090110.010$L - CERES Data Receipt from SDPF to ECS/LaRC, #A090110.020$L - CERES Data Validation/Formatting at ECS/LaRC, #A090110.060 - CERES Data Receipt from SDPF to ECS/LaRC (Fault), and #A090110.070$L - CERES Data Validation/Formatting at ECS/LaRC (Fault).
DADS2065#A	This requirement is verified through test. The DADS shall receive production and expedited science and engineering data from EDOS in a data driven mode. The EDC DAAC must receive production and expedited science and engineering data from EDOS in a data driven mode. EDOS only sends the data when all of the data packets necessary for producing each data set are available.
EOSD1502#A	This requirement is verified through demonstration. ECS elements shall use EBnet for data communications for the following types of data: a. Production data sets (Level 0 data) b. Expedited data sets c. Real-time data (for health and safety) d. Command data e. Data requested from back-up archive f. TDRSS schedule requests g. Data exchange with the FDF h. Production Data Transfers between DAACs i. Management Data exchange with SMC j. Data Products Exchange with ADCs, IPs, and Others The EDC DAAC must use EBnet for data communications to ingest production (Level 0) and expedited data sets. This test procedure does not cover sub-letters (c thru j). Sub-letters (c and d) are covered in the FOS Scenario Group. Need to get further clarification on sub-letter (e). Sub-letters (f and g) are not Release A functions. Sub-letter (h) is covered in the End-To-End Scenario Group. Sub-letter (i) is covered in the System Management Scenario Group. Sub-letter (j) is covered in test procedure #A090260.010$L - Ingest, Validate, and Archive NOAA ADC Ancillary Data at the LaRC DAAC.
SDPS0020#A	This requirement is verified through test. The SDPS shall receive EOS science, engineering, ancillary, and expedited data from the EDOS, and SDPF, and non-EOS ancillary data (as listed in Appendix C) from ADCs. The EDC DAAC must receive EOS science, engineering, ancillary, and expedited data from the EDOS. The DAAC Ingest/Distribution Technician verifies that the ingested data is recorded in the Ingest History Log. This test procedure does not cover references to “SDPF” and “non-EOS ancillary data (as listed in Appendix C) from ADCs”. Reference to “SDPF” is covered in test procedures #A090110.010$L - CERES Data Receipt from SDPF to the LaRC DAAC and #A090110.060$L -

	CERES Data Receipt from SDPF to the LaRC DAAC (Fault). Reference to “non-EOS ancillary data (as listed in Appendix C) from ADCs” is covered in test procedure #A090260.010$L - Ingest, Validate, and Archive NOAA ADC Ancillary Data at the LaRC DAAC.
SDPS0110#A	This requirement is verified through test. The SDPS shall be responsible for coordination of the transfer of production and expedited science and engineering data from EDOS SDPF and the IPs. The EDC DAAC must coordinate the transfer of production and expedited science and engineering data from EDOS. The DAAC Ingest/Distribution Technician verifies that all necessary resources are available and ready for the ingest of the EDOS data. This test procedure does not cover reference to “SDPF” and “IPs”. Reference to “SDPF” is covered in test procedures #A090110.010$L - CERES Data Receipt from SDPF to the LaRC DAAC and #A090110.060$L - CERES Data Receipt from SDPF to the LaRC DAAC (Fault). Reference to “IPs” is covered in test procedure #A090250.020$E - Ingest, Validate, and Archive Landsat-7 Data.

Test Inputs:

Data Set Name	Data Set ID	File Name	Description	Version
MODIS0_001	TBD	TBD	MODIS Science Data, PDS	TBD
MODIS0_002	TBD	TBD	MODIS Expedited Data, PDS	TBD
MODIS0_003	TBD	TBD	MODIS Housekeeping Data, PDS	TBD
MODIS0_004	TBD	TBD	MODIS Engineering Data, PDS	TBD
MODIS0_005	TBD	TBD	MODIS Ancillary Data, PDS	TBD

Step-By-Step Procedures		
Step No.	**Input Action / Expected Results**	**Pass / Fail / Comments**
10	Tester: Queries the data server for existence of any of the files that are to be ingested during this procedure.	
20	Expected Result: Files should not exist.	
30	DAAC Ingest/Distribution Technician: Receives notification from EDOS concerning the availability of the EDOS Level 0 MODIS data and the specific location where the data will be delivered to the EDC ECS DAAC.	
40	Expected Result: The EDC ECS DAAC prepares for the delivery of the MODIS Level 0 data.	
50	Tester: Sets up the EDOS simulator to begin ingest of the MODIS Level 0 data.	
60	Expected Result: EDOS simulator is enabled and ready to begin ingest of the MODIS Level 0 data.	
70	DAAC Ingest/Distribution Technician: Prepares the system for ingest and reviews the entire ingest process on the Ingest Tool GUI screen.	
80	Expected Result: The system is ready for ingest and status messages are displayed on the DAAC Ingest/Distribution Technician's screen during the ingesting of the EDOS Level 0 data.	
90	EDC ECS DAAC: The system sends an "Ingest Complete" message to the terminal notifying the DAAC Ingest/Distribution Technician that the data transfer has been completed.	
100	Expected Result: Receives an "Ingest Complete" message on the screen indicating the transfer of the MODIS Level 0 data is complete.	
110	DAAC Ingest/Distribution Technician: Downloads the Ingest History Log and reviews the log to verify that the ingested MODIS Level 0 data has been recorded.	
120	Expected Result: The system generates the Ingest History Log that is reviewed by the DAAC Ingest/Distribution Technician.	
130	DAAC Ingest/Distribution Technician: Verifies that a storage status notice is sent to EDOS indicating that the Level 0 MODIS data has been ingested and temporarily stored in the same location to which it was ingested.	
140	Expected Result: The system sends a storage status notice to EDOS indicating that the MODIS Level 0 data has been temporarily stored in the EDC DAAC.	
150	DAAC Ingest/Distribution Technician: Logs off of the system.	
160	Expected Result: Log off procedures are completed.	

Data Reduction and Analysis Steps:	
1. Review Ingest History Log for the following information: - Request ID - Priority - Data Provider - Start Time - End Time - Completion Status - Restart Flag - Pre-Processing Time - Transfer Time - Archive Time - Number of Files - Number of Granules - Number of Successful Granules - Data Volume Ingest Type 2. Review MSS Event Log 3. Review "Ingest Data Summary Report"	
Signature:	**Date:**

9.1.4 Early FDF and AM-1 Interface Test Support Sequence

This sequence is not applicable for the ECS System Acceptance Test Procedures - Volume 5 EDC Procedures document (411/VE1).

9.2 Higher Level Processed Data Scenario

The Higher Level Processed Data Scenario takes the EDC DAAC operations personnel through the process of planning for and receiving higher level data from the Landsat-7 Processing System (LPS). This scenario verifies the capabilities of the EDC DAAC to: receive data availability notices, verify that the data receipt process is complete and header information is accurate, and temporarily archive the L0R data and metadata.

9.2.1 Higher Level Processed Data Receipt from the V0 DAAC Sequence

This sequence is not applicable to the ECS System Acceptance Test Procedures - Volume 5 EDC Procedures (411/VE1).

9.2.2 Higher Level Processed Data Receipt from the TSDIS to the MSFC DAAC Sequence

This sequence is not applicable to the ECS System Acceptance Test Procedures - Volume 5 EDC Procedures document (411/VE1).

9.2.3 Higher Level Processed Data Receipt from the TSDIS to the GSFC DAAC Sequence

This sequence is not applicable for the ECS System Acceptance Test Procedures - Volume 5 EDC Procedures document (411/VE1).

9.2.4 Higher Level Processed Data Receipt from EPDS (Landsat-7) Sequence

The Higher Level Processed Data Receipt from EPDS (Landsat-7) Sequence verifies the ability of the EDC DAAC to ingest L0R data from the Landsat-7 Processing System (LPS). This sequence verifies the capability to receive data availability notices concerning the L0R data, associated inventory metadata, and browse data. Additional capabilities verified are the temporary archive of the L0R data.

Configuration: The subsystems needed to perform this sequence of tests are as follows:

CSS, MSS, INS, DPS and DSS

External Interfaces: The external interfaces (i.e., other ECS sites and data sources) needed for a sequence (both real and simulated) are listed:

LPS

Operator Position(s): The operator positions from the ECS Maintenance and Operations Descriptions document (607/OP2) needed to support this sequence are listed:

DAAC Ingest/Distribution Technician

Operational Scenario(s): There are no operations scenarios taken from the Operations Scenarios for the ECS Project: Release A document (605/OP2) used during this sequence of tests:

Test Dependencies: There are no test dependencies needed for this sequence of tests.

9.2.4.1 Ingest, Validate, and Archive Landsat-7 L0R Data

TEST Procedure No.: A090250.010$E	**Date Executed:**	**Test Conductor:**

Title:	Ingest, Validate, and Archive Landsat-7 L0R Data
Objective:	The purpose of this test is to verify that the EDC DAAC ingests L0R data from the LPS, validates the Data Availability Notice (DAN), and temporarily archives the data. This test is part of the early interface test between the EDC ECS DAAC and the Landsat-7 instrument.

Requirements	Acceptance Criteria
DADS0170#A	This requirement is verified through test. Each DADS shall be capable of receiving from designated EPDSs and ODCs, at a minimum, the following: a. L0-L4 data sets b. Metadata c. Ancillary data d. Calibration data e. Correlative data f. Documents g. Algorithms The INGST CI must ingest data provided by the Landsat 7 Processing Facility from the ESN using a file transfer protocol. The DAAC Ingest/Distribution Technician verifies that the ingested L0R data is recorded in the Ingest History Log. This test procedure does not cover sub-letters (c thru g). These sub-letters are not covered during the Landsat 7 early interface testing by the Acceptance Test Organization . This test procedure does not cover reference to “ODCs”. “ODCs” are not covered in the Release A time frame.
DADS0250#A	This requirement is verified through test. Each DADS shall receive, at a minimum, data in the following forms: a. Physical electronic media b. Electronic communications network c. Hardcopy media The INGST CI must provide the capability to electronically transfer data to be ingested into a specified EDC ECS DAAC location. This test procedure does not cover sub-letter (a). Sub-letter (a) is covered in test procedures #A090210.020$G and #A090210.020$L - Ingest, Validate, and Archive Migration Version 0 Data from the V0 DAAC. According to the requirement_interpretation, Release A only covers physical and electronic network. This test procedure does not cover sub-letter (c) - Hardcopy media.
DADS0310#A	This requirement is verified through test. Each DADS shall verify that data received came from an approved/authorized source. The EDC DAAC must perform an authentication check to verify privileges of the LPS Authentication Request.

DADS1070#A	This requirement is verified through test. The DADS shall send data check and storage status to the provider of ingest data. The EDC DAAC must send storage status to the provider of ingest data. The STMGT CI must check each Archive Status Request it receives for the correct type of data in all fields. Fields that must be check include Current Request Identifier and Request Identifier of previous Insert or Retrieve Requests to be statused. This test procedure does not cover reference to “data check”. Reference to “data check” is covered in test procedures #A090210.020$L - Ingest, Validate, and Archive Migration Version 0 Data from the V0 DAAC, #A090210.050$L - Ingest, Validate, and Archive SAGE II Ancillary Data from the V0 DAAC, #A090210.040$L- Ingest, Validate, and Archive Migration Version 0 Documentation from the V0 DAAC, and #A090260.010$L - Ingest, Validate, and Archive NOAA ADC Ancillary Data at the LaRC DAAC, #A090310.050$L - CERES Standard and Browse Data Products QA Assessment Metadata Receipt/Processing at the LaRC DAAC, #A090210.020$G - Ingest, Validate, and Archive Migration Version 0 Data from the V0 DAAC, #A090210.030$G - Ingest, Validate, and Archive TOMS Ozone Ancillary Data from the V0 DAAC, #A090210.040$G - Ingest, Validate, and Archive Migration Version 0 Documentation from the V0 DAAC, #A090240.010$G - Ingest, Validate, and Archive VIRS, PR, TMI, and GV Data from TSDIS, #A090240.020$G - Ingest, Validate, and Archive VIRS, PR, TMI, and GV Data from TSDIS, #A090240.030$G - Ingest, Validate, and Archive VIRS, PR, TMI, and GV Data from TSDIS (Fault), #A090270.010$G - Ingest, Validate, and Archive NOAA ADC Ancillary Data, and A090430.010$G - Reprocessed Data Receipt at the GSFC DAAC from TSDIS.
DADS1080#A	This requirement is verified through test. Each DADS shall maintain a data receipt log. The DAAC Ingest/Distribution Technician verifies that the Ingest History Log is updated with the following information: - Request ID - Priority - Data Provider - Start Time - End Time - Completion Status - Restart Flag - Pre-Processing Time - Transfer Time - Archive Time - Number of Files - Number of Granules - Number of Successful Granules - Data Volume - Ingest Type
LAND-0030#A	This requirement is verified through test. The LPS shall have the capability to send and the ECS shall have the capability to receive data availability notices for Landsat 7 Level 0R data,

	and associated inventory metadata and browse data. The EDC ECS DAAC must receive data availability notices for Landsat 7 Level 0R data, associated inventory metadata, and browse data from the LPS. The DAAC Ingest/Distribution Technician verifies the receipt of the data availability notice and update in the MSS Event Log.
LAND-0050#A	This requirement is verified through test. The LPS shall have the capability to send and the ECS shall have the capability to receive inventory metadata for Landsat 7 Level 0R data. The EDC ECS DAAC must have the capability to receive inventory metadata for Landsat 7 Level 0R data. The DAAC Ingest/Distribution Technician verifies that the ingested inventory metadata is recorded in the Ingest History Log.
LAND-0060#A	This requirement is verified through test. The LPS shall have the capability to send and the ECS shall have the capability to receive browse data for Landsat 7 Level 0R data. The EDC ECS DAAC must have the capability to receive browse data for Landsat 7 Level 0R data. The DAAC Ingest/Distribution Technician verifies that the ingested browse data is recorded in the Ingest History Log.
LAND-0070#A	This requirement is verified through test. The LPS shall have the capability to send and the ECS shall have the capability to receive Landsat 7 Level 0R data. The EDC ECS DAAC must have the capability to receive Landsat 7 Level 0R data. The DAAC Ingest/Distribution Technician verifies that the ingested Landsat 7 Level 0R data is recorded in the Ingest History Log.
LAND-0085#A	This requirement is verified through test. The ECS shall have the capability to send and the LPS shall have the capability to receive an acknowledgment after ECS archives the Landsat 7 data. The EDC ECS DAAC must send a Data Delivery Notice to the LPS upon completion of temporarily archiving the Landsat 7 data.
LAND-0150#A	This requirement is verified through test. All information exchanged between the Landsat 7 System and the ECS shall be provided in mutually agreed to formats. The Landsat L0R data ingested by the EDC ECS DAAC must be provided in mutually agreed to formats.
SDPS0110#A	This requirement is verified through test. The SDPS shall be responsible for coordination of the transfer of production and expedited science and engineering data from EDOS SDPF and the IPs. The EDC DAAC must coordinate the transfer of production and expedited science and engineering data from the IPs. The DAAC Ingest/Distribution Technician verifies that all necessary resources are available and ready for the ingest of the IP data. This test procedure does not cover reference to “SDPF” and “EDOS”. Reference to “SDPF” is covered in test procedures #A090110.010$L - CERES Data Receipt from SDPF to the LaRC DAAC and #A090110.060$L - CERES Data Receipt from SDPF to the LaRC DAAC (Fault). Reference to “EDOS” is covered in test procedure #A090130.030$E - AM-1 Data Ingest from EDOS at the EDC DAAC.

Test Inputs: Data Availability Notice				
Data Set Name	**Data Set ID**	**File Name**	**Description**	**Version**
L0R_INV_META_001	TBD	TBD	Level 0R Inventory Metadata	TBD
L0R_BROWSE_001	TBD	TBD	Level 0R Browse Data	TBD
L0R_DATA_001	TBD	TBD	Landsat-7 Level 0R Data	TBD

Step-By-Step Procedures		
Step No.	**Input Action / Expected Results**	**Pass / Fail / Comments**
	NOTE: The EDC DAAC Ingest/Distribution Technician needs to coordinate the ingest date/time for the Landsat 7 L0R data with the LPS personnel. There is no planning subsystem scheduled for the EDC DAAC during Release A.	
10	Tester: Queries the data server for existence of any of the files that are to be ingested during this procedure.	
20	Expected Result: Files should not exist.	
30	DAAC Ingest/Distribution Technician: Accesses the Ingest Status Monitor Tool (GUI Display) by selecting the "Monitor" option from the Ingest GUI Interface screen.	
40	Expected Result: The system identifies ongoing ingest requests (stored in Sybase tables) and displays them.	
50	LPS: Session controller sends an Authentication Request to the EDC ECS DAAC.	
60	Expected Result: EDC ECS DAAC receives the Authentication Request from the LPS session controller.	
70	EDC ECS DAAC: Performs an authentication check to verify privileges.	
80	Expected Result: The Authentication Request is verified and approval is granted.	
90	EDC ECS DAAC: Sends an Authentication Response to the LPS notifying them of successful authentication check.	
100	Expected Result: The LPS receives the Authentication Response from the EDC ECS DAAC.	
110	LPS: Sends a Data Availability Notice (DAN) to the EDC ECS DAAC for the Level 0R inventory metadata and browse data. The DAN specifies the file names, file sizes, file dates and times, file types and file directories (i.e., path names).	
120	Expected Result: The system automatically checks the received DAN. Once a request to ingest the Level 0R data is received, the INGST CI automatically checkpoints request information extracted from the DAN into a Sybase data base.	
130	EDC ECS DAAC: Validates the DAN and sends a Data Availability Acknowledgment (DAA) to the LPS.	
140	Expected Result: The LPS receives the DAA from the EDC ECS DAAC.	
150	EDC ECS DAAC: Accesses the LPS data for immediate transfer. Performs the "(m)get" file transfer, pulling all files at one time related to each error-free file group from the directory name(s) specified in the DAN.	
160	Expected Result: The LPS data is transferred via "(m)get" file transfer. The file's name and size are checked against information contained within the DAN.	

170	EDC ECS DAAC: The system sends an “Ingest Complete” message to the terminal notifying the DAAC Ingest/Distribution Technician that the data transfer has been completed.	
180	Expected Result: Receives an “Ingest Complete” message on the screen indicating the transfer of the Level 0R data is complete.	
190	EDC ECS DAAC: Sends a Data Delivery Notice (DDN) to the LPS indicating that the Level 0R has been transferred and ingested.	
200	Expected Result: The LPS receives the DDN from the EDC ECS DAAC.	
210	LPS: Sends a Data Delivery Acknowledgment (DDA) to the EDC ECS DAAC indicating receipt of the DDN.	
220	Expected Result: The EDC ECS DAAC receives a DDA from the LPS.	
230	DAAC Ingest/Distribution Technician: Downloads the Ingest History Log and reviews the log to verify that the ingested Level 0R data has been recorded.	
240	Expected Result: The system generates the Ingest History Log that is reviewed by the DAAC Ingest/Distribution Technician.	
250	DAAC Ingest/Distribution Technician: Verifies that a storage status notice is sent to the LPS indicating that the Level 0R data has been ingested and temporarily stored in the same location to which it was ingested.	
260	Expected Result: The system sends a storage status notice to the LPS indicating that the Level 0R data has been temporarily stored in the EDC ECS DAAC.	
270	DAAC Ingest/Distribution Technician: Logs off of the system.	
280	Expected Result: Log off procedures are completed.	

Data Reduction and Analysis Steps:	
1. Review Ingest History Log for the following information: - Request ID - Priority - Data Provider - Start Time - End Time - Completion Status - Restart Flag - Pre-Processing Time - Transfer Time - Archive Time - Number of Files - Number of Granules - Number of Successful Granules - Data Volume Ingest Type 2. Review MSS Event Log 3. Review "Ingest Data Summary Report"	
Signature:	**Date:**

9.2.5 Higher Level Processed Data Receipt from the NOAA ADC to the LaRC DAAC Sequence

This sequence is not applicable to the ECS System Acceptance Test Procedures - Volume 5 EDC Procedures (411/VE1).

9.2.6 Higher Level Processed Data Receipt from the NOAA ADC to the GSFC DAAC Sequence

This sequence is not applicable to the ECS System Acceptance Test Procedures - Volume 5 EDC Procedures (411/VE1).

9.3 Reprocessing Scenario

This scenario is not applicable to the ECS System Acceptance Test Procedures - Volume 5 EDC Procedures (411/VE1).

9.4 TSDIS Reprocessing Support Scenario

This scenario is not applicable to the ECS System Acceptance Test Procedures - Volume 5 EDC Procedures (411/VE1).

9.5 Mission Related Data Processing Scenario

This scenario is not applicable to the ECS System Acceptance Test Procedures - Volume 5 EDC Procedures (411/VE1).

10. Pull Scenario Group

The objective of the Pull Scenario Group is to confirm that the ECS user is provided the ECS services necessary to search and access the data holdings of the ECS DAACs, the Version 0 DAAC's, and the NOAA ADC. ECS services tested in this scenario include: Advertising services, browse, search types (inventory, directory, guide), file transfer protocol (ftp) orders, media access, support for standing orders, interoperability with the Version 0 system, the NOAA ADC and interfaces to Science Computing Facilities (SCF's).

For EDC, advertising services and algorithm I&T support services are verified along with access to other DAACs and ADCs via the Release A Desktop.

10.1 Science User Scenario

This scenario is not applicable to this volume.

10.1.1 ECS Desktop User Sequence

This sequence is not applicable to this volume.

10.1.2 ECS/Version 0 (V0) System Interoperability Sequence

The ECS/Version 0 (V0) System Interoperability Sequence demonstrates the interoperability between the ECS and V0 systems. It also shows that either system can interact with the other system's information server, making the ECS (V0) data holdings accessible for viewing and ordering by the V0 (ECS) user.

The ECS Advertising Service (EAS) provides search and order services for accessing V0 data holdings, while the ECS Search and Order Tool provides services for accessing ECS data holdings. Both the products of both these systems can be delivered directly to a user on physical media or electronically per the user's request.

Configuration: The subsystems needed to perform this sequence of tests are as follows: CSS/MSS, INS, CLS & ISS,.

External Interfaces: The external interfaces (i.e., other ECS sites and data sources) needed for this sequence (both real and simulated) are listed:

EDC V0 DAAC

Operator Positions: The operator positions from the ECS Maintenance and Operations Position Descriptions document (607/OP2) needed to support a sequence are listed:

DAAC Computer Operator

DAAC User Assistant

Operational Scenario: There are no operational scenarios needed for this sequence.

Test Dependencies: There are no test dependencies needed for this sequence of tests.

10.1.2.1 ECS User Access to Version 0

TEST Procedure No.: A100130.020$E	**Date Executed:**	**Test Conductor :**
Title:	ECS User Access to Version 0 (V0)	
Objective :	This procedure tests the capability of the ECS user to identify the data holdings at V0 EDC DAAC through the Advertising Service interface. The ECS verifies which V0 DAAC system holds data and passes the request to the appropriate DAAC IMS Server.	

Requirements	Acceptance Criteria
EOSD1695#A	This requirement is verified by test. The system shall provide 2-way interoperability with the V0 system. The systems shall enable users of each system to search, browse, and order data products made available by the other system. Using the ECS Search and Order Tool the tester must identify, search, and request data held in the V0 System.
IMS-0625#A	This requirement is verified by demonstration. The system shall provide bi-directional interoperability between ECS and V0 Systems for access to the inventory metadata, guide information, and browse products via level III catalog interoperability as specified in ICDs. The ECS and V0 Systems interact with information servers of the other system by using V0 system protocols. The tester, via the ECS Search and Order Tool, must test bi-directional access to inventory search requests and results, browse requests, and product requests.
IMS-0915#A	This requirement is verified by test. The system shall provide an interface to the Version 0 system for ordering data products to be delivered directly to the tester, or as specified in ICDs. The EDC ECS DAAC sends the product directly to the authorized user either on physical media or online. The tester must test access to data products from the V0 system via the ECS Search and Order Tool.
V0-0010#A	This requirement is verified by test. The ECS shall provide 2-way interoperability to the ESDIS V0 system via Level 3 interoperability. The tester must ensure that the Level 3 two-way catalog interoperability interfaces with ECS via the ECS Search and Order Tool, and supports the following services: directory search request/results, guide search request/results, inventory search request/results, browse request/results, product search request/results, quit request/results, and dependent valid values.

V0-0030#A	This requirement is verified by test. The ECS shall have the capability to send and the ESDIS V0 IMS shall have the capability to receive ECS User Authentication Information. The requirement must be verified by the tester accessing services or data from V0 via the ECS Search and Order Tool. The ECS interfaces directly with an ESDIS Server to request and receive User Authentication information.
V0-0040#A	This requirement is verified by test. The ECS shall have the capability to send and the ESDIS V0 IMS shall have the capability to receive V0 User Authentication Requests. The requirement must be verified by the tester accessing services or data from V0 via the ECS Search and Order Tool. The ECS interfaces directly with an ESDIS Server to request and receive User Authentication Requests.
V0-0055#A	This requirement is verified by test. The Version 0 shall permit ECS to use agreed upon Version 0 network components and services. The interfaces between ECS and V0 allow for transfer of data and requests. The tester must access components and services from V0 via the ECS Search and Order Tool.
V0-0060#A	This requirement is verified by test. The ECS shall have the capability to send and ESDIS V0 IMS shall have the capability to receive Inventory Search Requests via V0 protocols. The tester must ensure that the ECS sends the Inventory Search Requests to the ECS Search and Order Tool via V0 protocols.
V0-0070#A	This requirement is verified by test. The ESDIS V0 IMS shall have the capability to send and the ECS shall have the capability to receive Inventory Search Results via V0 protocols. The tester must ensure that the ECS Search and Order Tool sends the Inventory Search Results to the ECS via V0 protocols.
V0-0080#A	This requirement is verified by test. The ECS shall have the capability to send and the ESDIS V0 IMS shall have the capability to receive Guide Search Requests via V0 protocols. The tester must ensure that the ECS sends the Guide Search Requests to the ECS Search and Order Tool via V0 protocols.

V0-0090#A	This requirement is verified by test. The ESDIS V0 IMS shall have the capability to send and the ECS shall have the capability to receive Guide Search Results via V0 protocols. During this test, the tester must verify that the ECS Search and Order Tool sends the Guide Search Results to the ECS via V0 protocols.
V0-0100#A	This requirement is verified by test. The ECS shall have the capability to send and the ESDIS V0 IMS shall have the capability to receive Browse Requests via V0 protocols. During this test, the tester must verify that the ECS sends the Browse Search Requests to the ECS Search and Order Tool via V0 protocols.
V0-0110#A	This requirement is verified by test. The ESDIS V0 IMS shall have the capability to send and the ECS shall have the capability to receive Browse Search Results via V0 protocols. During this test, the tester must verify that the ECS Search and Order Tool sends the Browse Search Result data to the ECS via V0 protocols.
V0-0370#A	This requirement is verified by test. The DAAC(s) shall have the capability to send and ECS shall have the capability to receive Advertising Information. The tester must access the Advertising service from the ECS Desktop to view the data holdings at V0.
V0-0380#A	This requirement is verified by test. The ECS shall have the capability to send and the ESDIS IMS team shall have the capability to receive Dependent Valid Information. The system receives the Dependent Valid Information from the local system which provides information describing data holdings at EDC DAAC. The tester must access data at ECS EDC DAAC via the ECS Search and Order Tool.
Test Inputs:	None.

Data Set Name	Data Set ID	File Name	Description	Version

Step-By-Step Procedures		
Step No.	**Input Action / Expected Results**	**Pass / Fail / Comments**
10	Tester: Logs into the ECS desktop; brings up the ECS Search and Order Tool.	
20	Expected Result: The "Welcome" screen appears after all the necessary information is entered.	
30	Tester: Select GoTo menu.	
31	Expected Result: The System displays the GoTo Screen Functions window.	
32	Tester: Select Search Screen.	
40	Expected Result: The Search screen is displayed	
	DIRECTORY SEARCH REQUEST/RESULTS	The Directory Search Request/Results provides information on the location of metadata or dataset catalogues.
50	Tester: Selects Directory Search.	
51	Expected Result: The search is executed.	
60	Tester: Submits a directory query for metadata at the ECS EDC DAAC in the ECS Search and Order Tool system.	
70	Expected Result: The query is executed and the system responds with a Communications Results Status window for the EDC DAAC.	
80	Tester: Clicks on the "Data" button to view the data receives from V0 EDC DAAC.	
100	Expected Result: The system shows the data at V0 EDC DAAC.	
	BROWSE REQUEST/RESULTS	The Browse Request/Results allows the user to retrieve/view low resolution images.
110	Tester: Enters an Inventory Search for data at V0 EDC DAAC in the ECS Search and Order Tool system.	
120	Expected Result: The ECS Search and Order Tool returns an Inventory Search Results field called "Browse Available" which indicates whether a browse product exists for a given granule.	
130	Tester: Uses a FTP (Local) Browse method to see a browse product for any granule.	

140	Expected Result: The granule unique identifier information is passed by the ECS Search and Order Tool System to the V0 EDC DAAC. The V0 EDC DAAC sends back an acknowledgment message to the ECS Search and Order Tool about receiving the request for browse data. The ECS EDC DAAC also sends an e-mail to the user instructing the user where to find the browse data and how to access the product via FTP.	
150	Tester: Invokes EOSView from the Desktop to view this browse image upon receiving notification from the ECS EDC DAAC about browse product.	
160	Expected Result: The system allows the user to display the browse image product on his/her workstation.	
170	Tester: Uses an Integrated Browse method to see a browse product for any granule.	
180	Expected Result: System - The granule identifier information and method of browse (Integrated) are passed to the ECS EDC DAAC. The EDC DAAC sends the browse products back to the ECS Search and Order Tool in HDF format. The user observes the image displayed on the Integrated Browse Display Screen.	
	INVENTORY SEARCH REQUEST/RESULTS	The Inventory Search Request/Results allows the user to locate specific granules within a dataset.
190	Tester: Selects the Inventory "Search Type" from the Inventory Search screen.	
191	Expected Result: The “Search Type” option is invoked.	
192	Tester: Enters an Inventory Search for data at V0 EDC DAAC. The minimum Search Criteria requires Geographic Info., and at least one of the following: Sensor, Parameter or Dataset ID.	
193	Expected Result: The search brings up the required data.	
194	Tester: Types the valid information into a field. or may use the system provided lists of valid values for selected fields on the search screen.	
195	Expected Result: The ECS Search and Order Tool displays the appropriate Dependent Valids List for that field.	
196	Tester: Clicks on each item to select values for a given field from the Valid List. Make the desired selection(s) and press "O.K" to return to the search screen.	
197	Expected Result: The ECS Search and Order Tool retrieves granule information associated with all selected datasets.	
198	ECS Search and Order Tool System: The system performs an automatic inventory search and returns the user to the Search Screen.	
199	Expected Result: Tester returns to the search screen window.	
200	Tester: Executes the Search.	
201	Expected Result: The system displays a Communications Status screen window.	
210	Tester: Clicks the "Data" button to view the data.	

220	Expected Result: The completed search generates the Inventory Results. The Inventory Results will include the dataset level and granule information.	
	GUIDE SEARCH REQUEST/RESULTS	The Guide Request/Results provides detailed descriptions about datasets, platforms and sensors.
230	Tester: Selects the "Guide" Search Type on the screen.	
240	Expected Result: The system displays the Guide Display Screen and allows to access Guide Search in one of the following three methods: Guide Type, Guide Info, and Item.	
250	Tester: Performs a Free Text search by selecting the "Guide" Search Type and Enters the word "DMSP".	
260	Expected Result: The system returns with a list of all guide documents with the word DMSP in them.	
270	Tester: Clicks on the document name to view that document.	
280	Expected Result: The system brings up a guide document.	
290	Tester: Searches for word(s) in the current document by clicking the "Find" from the screen.	
300	Expected Result: The system goes to the first occurrence of the word in the guide document.	
	PRODUCT REQUEST/RESULTS	The Product Request/Results provides placement of orders for full data sets.
310	Tester: Clicks on the Order button from the GoTo Screen Functions window and Selects Product Request from the Go To menu.	
320	Expected Result: The system displays the orderable granules and establishes a dialog through the interface with EDC DAAC to make a product request.	
330	Tester: Clicks on the granule.	
340	Expected Result: The system displays the Package Selection Options screen.	
350	Tester: Selects item, processing option and media option (physical or on-line).	
360	Expected Result: The screen returns the Product Request Screen.	
370	Tester: Selects the submit Request button from the Screen Functions menu.	
380	Expected Result: The Product Request Search screen appears. The system displays Communications Status screen and Contact Information is available.	
390	Tester: Clicks on the Contact Information to view the information.	
391	Expected Result: The tester views the provided information.	

	QUIT	Notification of premature termination of a session due to problems.
400	Tester: Selects "abort" from the GoTo menu.	
410	Expected Result: The abort option comes up, and the system prompts for the confirmation.	
420	Tester: Clicks on the OK button.	
430	Expected Result: The ECS Search and Order Tool session ends.	
Data Reduction and Analysis Steps:		
Signature:		**Date:**

10.1.3 EOSDIS Core System (ECS)/Affiliated Data Center (ADC) Interoperability Sequence

This sequence is not applicable to this volume.

10.2 Science Computing Facility (SCF) User Scenario

The SCF User Scenario demonstrates to an SCF user that the EOS investigators are provided access to the ECS toolkits of the Science Computing Facilities located at the EROS Data Center (EDC). This access provides EOS investigators with the ability to develop and maintain standard data production software; perform quality assurance (QA) of products; administer and manage local data bases for each site; request production status and history files; request resource usage updates; and update calibration coefficients. The science investigator is assured of the ECS capability to develop and transmit science data production software to the SCF within the contents of an initial Toolkit Delivery Package. This initial Toolkit Delivery Package contains the Science Data Production tools that are necessary to begin development. The process for completed development package delivery to the DAAC and integration and test procedures for these packages is also confirmed.

QA functions at a SCF are demonstrated and evaluated. These functions include QA initial activities when an apparent data problem is detected and reported via a Data Quality Request Notification from the DAAC to a SCF, such as the steps taken to assure investigator confirmation of the problem, transfer of the presumed erroneous data product from its DAAC archive location to the SCF, and QA access to ancillary data such as history files to facilitate the QA investigations.

The product history file standard format is analyzed to assure inclusion of specific file components including, the algorithms used in development, the science investigators that developed the software, input databases used, and any atypical input options that might have been used in running the software.

Procedures are reviewed to assure that activities are identified for receiving data into the SCF, as well as assuring that the products that are developed and distributed at the SCF are managed by the DAACs configuration management, Site Software Manager.

SCF's ability to update calibration coefficient procedures are confirmed including, procedures for science investigator requests for, and receipt of, coefficient files from the DAAC, as well as confirmation that updates are returned electronically to the DAAC as part of the Science Production Software Delivery Package.

10.2.1 GSFC SCF/ECS Sequence

This sequence is not applicable to this volume.

10.2.2 LaRC SCF/ECS Sequence

This sequence is not applicable to this volume.

10.2.3 EDC SCF/ECS Sequence

The EDC SCF/ECS sequence verifies that ECS is accessible to a user at the ASTER and MODIS SCFs. This sequence tests the interface between the EDC ECS and the ASTER and MODIS Instrument Teams. This is a manual interface which does not invoke the limited ingest functions provided EDC in Release A. SCF personnel are able to remotely log onto equipment and/or use FTP to deliver/receive data from the EDC DAAC. During Release A, this interface will be used to support interface testing and science software test and integration activities. For this sequence, users conduct Algorithm Integration and Testing and Toolkit Testing.

Note: SDPS components to support science software integration and test are provided by the Data Processing Subsystem.

Configuration: The subsystems needed to perform this sequence of tests are as follows: CSS/MSS, CLS, INS, & ISS.

External Interfaces: The external interfaces (i.e. other ECS sites and data sources) needed for this sequence (both real and simulated) are listed:

ASTER and MODIS SCF

EDC V0 DAAC

SMC

Operator Position(s): There are no operator positions needed for this sequence.

Operational Scenario(s): There are no operations scenarios taken from the Operations Scenarios for the ECS Project: Release A document (605/OP2), used during this sequence of tests.

Test Dependencies: There are no test dependencies needed for this sequence of tests.

10.2.3.1 Algorithm Integration and Test at the EDC DAAC

TEST Procedure No.: A100230.010$E	**Date Executed:**	**Test Conductor :**
Title:	Algorithm Integration and Test at the EDC DAAC	
Objective :	This procedure tests the EDC DAAC's Science Software Integration and Test Team's (SSITT) ability to install, verify, archive, and report on science software received from the ASTER and MODIS SCFs. Next, it verifies the user interfaces between the ECS DAAC and the ASTER and MODIS SCFs support continued testing and development of science algorithms. Finally, this test verifies the ASTER and MODIS SCFs' ability to search, retrieve, and check-out data and algorithms from the DAAC archive.	

Requirements	Acceptance Criteria
DADS0140#A	This requirement is verified through test. Each DADS shall receive from other DAACs, at a minimum, the following for the purpose of product generation: a. L0-L4 b. Metadata c. Ancillary data d. Calibration data e. Correlative data f. Documents g. Algorithms ASTER and MODIS algorithms must be received at the EDC DAAC. Only item g is tested in this procedure. Items a-f are tested in the Push scenario group.
DADS0190#A	This requirement is verified through test. Each DADS shall receive from the SCF, at a minimum, the following: a. Special products (L1-L4) b. Metadata c. Ancillary data d. Calibration data e. Correlative data f. Documents g. Algorithms After receiving correlative data, Metadata associated with correlative data, documents, etc., the system logs show that the science software and all accompanying information (i.e., documentation) is received and accounted for. The tester verifies that the history logs are updated to reflect the ingested data and all accompanying information.
DADS0220#A	This requirement is verified through test. Each DADS shall accept, at a minimum, the following data types in support of development of initial calibration: a. Instrument calibration data b. Scientific calibration The EDC DAAC must be capable of receiving Instrument calibration data and Scientific calibration data.

DADS0281#A	This requirement is verified through test. Each DADS shall be capable of ingesting and storing data to support the instrument science team(s) in: a. Pre-launch checkout of their instruments b. Pre-launch science checkout c. Development of initial calibration information The tester verifies that the history logs are updated to reflect the data ingest, in addition to, the archiving of the calibration data. This test procedure only covers sub-letter (c) of this requirement. Sub-letters (a) and (b) are not covered in this test procedure.
DADS0450#A	This requirement is verified through test. Each DADS shall provide storage, at a minimum, for the following scientist provided data: a. Special data products b. Associated correlative data sets c. Associated ancillary data sets d. Associated calibration data sets e. Research results (articles, algorithms, data sets, software) f. Instrument characterization data sets g. Associated Metadata The tester will query the archive and verify that the scientist provided data has been stored.
DADS1080#A	This requirement is verified through test. Each DADS shall maintain a data receipt log. The tester verifies that the following information is recorded in the Ingest History Log: ingest start/stop dates and times, ingest request identifier, external data provider, final service request status, data type identifiers, ingest data volume, number of data sets, and number of data files. The tester will query the data receipt log before and after the ingest of ASTER and MODIS data and verify that the ingest has occurred.
DADS2380#A	This requirement is verified through demonstration. Each DADS shall send to the SCF, at a minimum, the following: a. L0-L4 b. Expedited data d. Metadata e. Ancillary data f. Calibration data g. Correlative data h. Documents i. Algorithms The tester verifies that the history logs at the ASTER and MODIS SCFs are updated to reflect the ingested data has been received from the EDC DAAC.
EOSD1760#A	This requirement is verified through test. The ECS elements shall send the following types of data at a minimum to the ECS science community (TLs, TMs, PIs, and Co-Is): a. Software Problem Reports

	b. Documentation c. Metadata (copies of inventories) d. Browse data e. Archived data f. Accounting information The listed items will be sent to users via FTP and electronic mail. These problem reports must be documented with metadata containing descriptions of the data types found within the problem reports and accounting information about the problem reports.
IMS-0440#A	This requirement is verified through test. The IMS shall maintain information that describes spacecraft housekeeping and ancillary data parameters stored in the archives. The tester verifies that they are able to access the spacecraft housekeeping and ancillary data parameters through the EDC DAAC inventory and directory data base.
IMS-0450#A	This requirement is verified through test. The IMS shall accept and validate new and updated metadata for all ECS archive data that has been ingested at the DADS. The tester verifies that the new and/or updated metadata is recorded in the log and stored in the EDC DAAC inventory and directory data base.
IMS-1720#A	This requirement is verified through test. The IMS shall provide the capability to produce reports that relate data sets to: a. Processing algorithms used for data generating at the PGS b. Software used for data generation at the PGS c. Parameters used for data generation at the PGS d. Data recipients The tester verifies and reviews the system generated reports relating data sets to, for example, software used for data generating at the PGS.
PGS-0400#A	This requirement is verified through test. The PGS shall have the capability to monitor the status of all algorithm and calibration coefficient testing and generate algorithm and calibration test reports. The system is able to monitor the status of any and all testing of the ingested ASTER and MODIS science software and calibration coefficients. The system is able to measure the following: wall clock time of a process, CPU time of each procedure within a process, the wall clock time of each procedure within a process, memory usage of a process, and the disk space usage of a process. The system allows the SSITT and other authorized users to examine the integration and test logs, in addition to, other reports.

PGS-0600#A	This requirement is verified through test. The PGS shall provide an algorithm and calibration test and validation environment that is fully compatible with but isolated from the operational production environment. The user must have the capability to run binary executables without impacting other ongoing DAAC activities.
PGS-0602#A	This requirement is verified through test. The PGS shall have the capability to accept POSIX-compliant science algorithms and compile algorithm source code written in a standard programming language (e.g., FORTRAN, C, Ada). The operations staff will ensure the POSIX.2 compliant platform in the SPRHW CI and AITHW CI have a development environment installed that support C, C++, FORTRAN, etc.
PGS-0610#A	This requirement is verified through test. The PGS shall accept from the SCFs new or modified calibration coefficients to be validated in the test environment. Calibration coefficients shall contain the following information, at a minimum: a. Identification of coefficient data set b. Calibration coefficient values c. Author and version number d. Identification or related processing algorithm e. Start and stop date/time of applicability f. Date and time g. SCF identification h. Reasons for update. The system log is updated to reflect that all of the information listed above in a Science Software Delivery is received and accounted for.
PGS-0640#A	This requirement is verified through test. The PGS shall accept from the SCF new or modified Standard Product algorithms to be tested at the processing facility. This software shall be received into the test environment and shall contain the following information at a minimum: a. Algorithm identification b. Algorithm source code c. List or required inputs d. Processing dependencies e. Test data and procedures f. Algorithm documentation The system log is updated to reflect that all of the information listed above is received and accounted for.

PGS-0650#A	This requirement is verified through test. The PGS shall have the capability to validate the required operational algorithm characteristics prior to scheduling algorithm test time. These characteristics shall include at a minimum: a. Language b. Operational impacts (i.e., algorithm software size, required resources) c. Algorithm documentation d. Data handling standards, as appropriate e. Units and models used f. Operational compatibility g. Required metadata outputs. The system log is updated to reflect that all of the information listed has been validated. The Science Software documentation must be stored in any of the following formats: PostScript, ASCII, Hypertext Markup Language (HTML), Microsoft Word, WordPerfect, Adobe Acrobat Portable Document Format (PDF).
PGS-0860#A	This requirement is verified through test. The PGS shall have the capability to schedule and coordinate algorithm and calibration coefficients test time in the test environment with the appropriate SCF. The PLANG CI must have the capability to plan algorithm and calibration coefficient test time in the test environment. Only manual scheduling of test time will be in Release A, therefore the operations staff will phone the SCF to schedule test time.
PGS-0870#A	This requirement is verified through test. The PGS shall have the capability to schedule algorithm test resources that do not interfere with the operational production environment. The SPRHW CI and the PLANG CI must be capable of supporting science software testing and scheduling of algorithm test Data Processing Requests without interfering with normal operations.
PGS-0900#A	This requirement is verified through test. The PGS shall send test products to the SCF for analysis. These shall contain the results of algorithm testing and shall contain the following information at a minimum: a. Science software identification b. Test time(s) c. Processor identification d. Test results. Files containing the items listed above must be transferred between the PGS and the SCF for analysis via ftp.

PGS-0910#A	This requirement is verified through test. The PGS shall have the capability to support analysis of algorithm test results. Test results must be able to be displayed and/or written to files.
PGS-0915#A	This requirement is verified through test. The PGS shall support remote science software integration and test activities at the DAACs including: a. Executing code checkers, compiling, linking, debugging code, file comparison and science software resource profiling from the SCF. b. Interactive remote access to a job scheduling tool for defining and executing jobs.
PGS-0920#A	This requirement is verified through test. The PGS shall have the capability to validate, through testing, that SCF processing algorithms will execute properly in the operational environment. Validation shall include final compilation and linkage of the source code and testing to verify proper software execution in the operational environment based on indicated data and test results provided by the SCF and the investigator, but shall not include scientific validation of products. The tester will ensure the SCF processing algorithms execute properly in the operational environment.
PGS-0925#A	This requirement is verified through test. The PGS shall validate algorithms used for conversions, calibrations and transformations of EOS engineering data. The tester reviews the log to verify that the results of the validation checks are recorded.
PGS-0930#A	This requirement is verified through test. The PGS shall have the capability to transfer validated algorithm software and calibration coefficients from the test environment to the operational environment to be used in the production of Standard Products. The AITTL CI must provide to the operations staff, via a GUI, the capability to display a list of PGE Database Entries.
PGS-0940#A	This requirement is verified through test. The PGS shall provide storage for all candidate algorithms' software executables and calibration coefficients. The tester verifies that the software executables and calibration coefficients are stored, the history log updated, and a storage notice is sent to the provider of the ingested data.

PGS-0960#A	This requirement is verified through test. The PGS shall send the DADS new or modified algorithms. This delivery shall contain the following information at a minimum: a. Source code including version number and author b. Benchmark test procedures, test data and results c. Date and time of operational installation d. Final algorithm documentation e. Calibration coefficient values The operations staff must be able to retrieve and to store a copy of a specific Science Software Archive Package via the AITTL CI.
SCF-0010#A	There is no verification method for this requirement. The SCF interface shall consist of an ESDIS approved computing platform that shall have a C compiler. To access FORTRAN routines in the ECS Toolkits, the platform shall also have a FORTRAN compiler. External only requirement: Information only. No action is required by ECS.
SCF-0020#A	There is no verification method for this requirement. The SCF interface platform shall supply the DCE client and have an I/O communication port and the ability to run TCP/IP software for communication to the ECS. External only requirement: Information only. No action is required by ECS.
SCF-0025#A	There is no verification method for this requirement. The SCF interface platform shall provide one of the following levels of security for interoperation with ECS: a. Kerberized authentication for bi-directional file transfers. b. User of Distributed Computing Environment (DCE) for authentication of users, authorization of users for access to services such as remote file access, and provision for integrity of data being transferred. External only requirement: Information only. No action is required by ECS.
SCF-0030#A	There is no verification method for this requirement. The SCF interface platform shall have adequate computing resources for the storage, compilation, linking, and execution of ECS supplied software resident on the platform. External only requirement: Information only. No action is required by ECS.

SCF-0040#A	This requirement is verified through test. The ECS shall have the capability to send to the SCFs the Data Production Software Specification Requirements describing what is required for completing the Initial Data Production Software Specifications. The system log is reviewed to ensure the specification requirements were received.
SCF-0070#A	This requirement is verified through test. The ECS shall have the capability to provide Integration and Test Specifications to the scientist at the SCF. These specifications are defined by the Data Processing Focus Team. These specifications are implemented in the Data Production Software Delivery Package and support smooth integration of the data production software into the ECS production environment. This requirement must be followed by both the SCF and ECS for the data production software to be integrated into the production environment.
SCF-0080#A	This requirement is verified through demonstration. The ECS shall have the capability to provide an Interactive Session Dialog with the SCF. This dialog, to aid integration and test of the data production software into the ECS production environment, shall support, at a minimum, general communications between the ECS and the SCF that include logins, mail messages, status reports, test coordination, test execution scripts, and solutions to minor problems. This dialog occurs using various email and voice messages exchanged between the science software integration and test personnel and the SCF investigator team during the science software integration and test process and must support the integration and test process of data production software.
SCF-0090#A	This requirement is verified through test. The SCF shall have the capability to provide ECS with the Data Production Software Delivery Package with "Required Items For Delivery" as specified by the Science User's Guide and Operations Procedure Handbook for the ECS Project. The ECS user must verify the Software Delivery Package was received and it is specified correctly.
SCF-0100#A	This requirement is verified through test. The ECS shall have the capability to forward Test Products to the SCF. These products generated by the science software at the ECS will require the review of the scientist at the SCF who submitted the software. These products must be sent to the SCF on tape, electronic mail, FTP, etc.

SCF-0110#A	This requirement is verified through demonstration. **Note: This verification method was changed from test to demonstration.** The ECS shall have the capability to receive Test Product Reviews from the SCF. These reviews shall include the comments and recommendations of the scientist at the SCF who has reviewed the Test Products. This requirement is verified once an email message between the DAAC and SCF has been sent and received.
SCF-0120#A	This requirement is verified through test. The ECS shall have the capability to receive Data Production Software Updates from the SCF. These Data Production Software Updates include modifications to any data production software already submitted to the ECS by the SCF. The Data Production Software Updates may include some or all the items required in the Data Production Software Delivery Package. Data Production Software updates must be sent to the ECS.
SDPS0090#A	This requirement is verified through inspection. The SDPS shall interface with the PIs and the other science users to support the development and testing of data product algorithms and QA of produced data products. The ECS staff must be able to communicate with the SCFs electronically via the network, via email, by teleconferences, etc.
SDPS0140#A	This requirement is verified through inspection. The SDPS shall support element, system, and subsystem test activities throughout the development phase. The SPRHW CI must be capable of supporting science software test without impact to normal operations and test activities throughout the development phase. The completion of this test will satisfy this requirement. This test procedure only covers “system” test activities. This test procedure does not cover “element” or “subsystem” test activities.

Test Inputs: **Pull test data table is still being updated.**

Data Set Name	Data Set ID	File Name	Description	Version

Step-By-Step Procedures		
Step No.	**Input Action / Expected Results**	**Pass / Fail / Comments**
10	PUSH section receives the daily schedule from the planning and scheduling section and begins to coordinate with the ASTER SCF about scheduling and testing the AITO software without affecting the day-to-day operations of the DAAC and the SCF.	
20	EDC DAAC: ECS sends an email DAN to the SCF to announce that the I&T Requirements have been staged for pull by the SCF via kftp.	
30	Expected Results: The ASTER SCF follows the instructions within the DAN and accomplishes the kftp.	
40	Expected Results: The ASTER SCF receives the I&T requirements and test specifications from the SSITT at the EDC DAAC.	
50	EDC DAAC: ECS Software Package Subscription Acknowledgment (in the form of an email message) is sent to the ASTER SCF via the SCF Campus Network.	
60	Expected Results: EDC receives the DAN acknowledgment.	
70	EDC DAAC: ECS Software Package Announcement is made to the SCF via email and is available for pickup from the ECS Data Handling System (EDHS) using password-protected ftp.	
80	Expected Results: The SCF "pull's" the package from the ECS.	
90	ASTER SCF: ASTER SCF begins an Interactive Session Dialog with the ECS.	
100	Expected Results: E-Mail and voice communications between the DAAC and the SCF begin in order to coordinate the SSI&T schedule to ensure that adequate staff and system resources are available to support the delivery of the science software to the EDC DAAC.	
110	Expected Results: Date to deliver science software is established after schedules have been established, resources ensured, and staff scheduled.	
120	Tester: The SDP Software is placed under SSI&T software configuration management control at the EDC DAAC using the ClearCase configuration management tool.	
130	Expected Results: The software is maintained under CM.	
140	Tester: The SDP Software must be compiled and linked with the EDC DAAC version of the SDP Toolkit. The EDC DAAC version of the SDP toolkit contains actual links with the ECS processing software which were only “stubs” in the toolkit version available to the ASTER SCF.	
150	Expected Results: The SDP Software is compiled and linked with the EDC DAAC version of the SDP Toolkit.	
160	Tester: Standalone test cases are run employing the suite of test data provided by the ASTER SCF.	

170	Expected Results: The output of the science software at the EDC DAAC is the same as that obtained from the ASTER SCF. Resource usage is measured during these tests.	
180	Tester: The SDP Software information is entered into the Planning Data Base. This information includes Product Generation Executive (PGE) identifier and version number, input and ancillary data dependencies, activation rules, and the resource profile.	
190	Expected Results: The Planning Data Base is updated with the SDP Software.	
200	Tester: Operational testing is performed. Prior to launch, simulated data supplied by the IT is used. For post-launch deliveries of SDP Software upgrades, a period of testing in parallel with the current production version is performed.	
210	Expected Results: Problem reports, if any, are generated and entered in the DDTS and copies of the problem reports are made available to the SCF.	
220	EDC DAAC: Sends DAN's for the Test Products after completion of the SI&T to the SCF's.	
230	Expected Results: SCF acknowledges receipt of the DAN and Pull's the QA and problem reports from the DAAC.	
240	EDC DAAC: Sends Test Products to the SCF's for special processing.	
250	Expected Results: The Test Products must are received at the SCF.	
260	ASTER SCF: Sends Test Product Reviews to the ECS's after processing.	
270	Expected Results: The Test Product Reviews are received at the EDC ECS.	
	MODIS SCF INTERFACE	
280	PUSH section receives the daily schedule from the planning and scheduling section and begins to coordinate with the MODIS SCF about scheduling and testing the AITO software without affecting the day-to-day operations of the DAAC and the SCF.	
290	EDC DAAC: ECS sends an email DAN to the SCF to announce that the I&T Requirements have been staged for pull by the SCF via kftp.	
300	Expected Results: The MODIS SCF follows the instructions within the DAN and accomplishes the kftp.	
310	Expected Results: The MODIS SCF receives the I&T requirements and test specifications from the SSITT at the EDC DAAC.	
320	EDC DAAC: ECS Software Package Subscription Acknowledgment (in the form of an email message) is sent to the MODIS SCF via the SCF Campus Network.	
330	Expected Results: EDC receives the DAN acknowledgment.	
340	EDC DAAC: ECS Software Package Announcement is made to the SCF via email and is available for pickup from the ECS Data Handling System (EDHS) using password-protected ftp.	

350	Expected Results: The SCF "pull's" the package from the ECS.	
360	MODIS SCF: MODIS SCF begins an Interactive Session Dialog with the ECS.	
370	Expected Results: E-Mail and voice communications between the DAAC and the SCF begin in order to coordinate the SSI&T schedule to ensure that adequate staff and system resources are available to support the delivery of the science software to the EDC DAAC.	
380	Expected Results: Date to deliver science software is established after schedules have been established, resources ensured, and staff scheduled.	
390	Tester: The SDP Software is placed under SSI&T software configuration management control at the EDC DAAC using the ClearCase configuration management tool.	
400	Expected Results: The software is maintained under CM.	
410	Tester: The SDP Software must be compiled and linked with the EDC DAAC version of the SDP Toolkit. The EDC DAAC version of the SDP toolkit contains actual links with the ECS processing software which were only “stubs” in the toolkit version available to the MODIS SCF.	
420	Expected Results: The SDP Software is compiled and linked with the EDC DAAC version of the SDP Toolkit.	
430	Tester: Standalone test cases are run employing the suite of test data provided by the MODIS SCF.	
440	Expected Results: The output of the science software at the EDC DAAC is the same as that obtained from the MODIS SCF. Resource usage is measured during these tests.	
450	Tester: The SDP Software information is entered into the Planning Data Base. This information includes Product Generation Executive (PGE) identifier and version number, input and ancillary data dependencies, activation rules, and the resource profile.	
460	Expected Results: The Planning Data Base is updated with the SDP Software.	
470	Tester: Operational testing is performed. Prior to launch, simulated data supplied by the IT is used. For post-launch deliveries of SDP Software upgrades, a period of testing in parallel with the current production version is performed.	
480	Expected Results: Problem reports, if any, are generated and entered in the DDTS and copies of the problem reports are made available to the SCF.	
490	EDC DAAC: Sends DAN's for the Test Products after completion of the SI&T to the SCF's.	
500	Expected Results: SCF acknowledges receipt of the DAN and Pull's the QA and problem reports from the DAAC.	
510	EDC DAAC: Sends Test Products to the SCF's for special processing.	
520	Expected Results: The Test Products must are received at the SCF.	
530	MODIS SCF: Sends Test Product Reviews to the ECS's after processing.	

540	Expected Results: The Test Product Reviews are received at the EDC ECS.	
Data Reduction and Analysis Steps:		
A. The following materials should be secured for analysis at the close of the procedure: 1. System Event Log Printout 2. Ingest History Log Printout 3. Algorithm files sent to SCF to check for proper format and contents.		
Signature:		**Date:**

11. Flight Operations Scenario Group

The Flight Operations Scenario Group is not applicable to this Volume. Refer to “Release A System Acceptance Test Procedures for the ECS Project, Volume 3: Earth Observing System (EOS) Operations Center (EOC)” for FOS procedures.

This page intentionally left blank.

12. End-to-End Scenario Group

The End-to-End Scenario Group verifies the ECS capabilities to support "all-up" multi-site operations and typical "day-in-the-mission-life" scientist activities. This group of scenarios and associated tests verifies that the ECS can support broad, multi-site interactive operations in support of mission planning, scheduling and science data access, and distribution. These scenarios verify the capabilities of ECS to enable the users and operators to perform multi-step processes, including multiple data set searches and transfers, correlative data set analysis, etc.

In addition, early selected AM-1 mission interfaces needed in Release B, some of which are still being implemented, are tested and/or simulated. The overall objective of the end-to-end scenario group is to demonstrate that the ECS, as a 'whole', operates properly and can provide the full range of required functional capabilities for the TRMM Release.

This scenario group concentrates on extending the functional verification performed in executing the scenarios described in Sections 8 through 11, but occasional replication of single entity functional testing is unavoidable. Where possible, actual interfaces and existing, real data are used. In many cases, however, simulated data streams and/or interfaces are used due to the immaturity of the ECS, the missions and/or the interfacing external facilities. The ECS EDF is used to simulate some tests, but testing at the actual DAAC sites predominates. Performance tests and performance analyses complement the multi-site and mission support tests to ensure that the ECS meets current and projected system performance requirements.

This scenario group verifies the ECS capabilities to support inter-site communications and operations among the three TRMM Release A DAAC sites, the EOC, the SMC and with the external EDOS, EBnet, FDF, NCC systems; scientist data handling, processing and distribution support for the TRMM mission; early AM-1 mission interface testing; system management and inter-site coordination; and system and end-to-end performance requirements.

12.1 Multi-Site Intercommunications and Interoperations Scenario

This scenario carries the ECS site operations staff through the process of handling complex data product orders that requires supporting data from multiple sites. This scenario confirms the capability of the system to allow users and operators to perform message broadcasting, multi-site system management and inter-site network communications. This scenario confirms inter-site interfaces, with each site accepting and interpreting data messages from other sites to ensure readiness to support interactive message traffic among the three DAACs and the SMC, and with the EDOS and the DAO, using EBnet or NOLAN. Message traffic to/from the EOC and the EDC DAAC and the SMC is also verified. In addition, the capability of the SMC to support system wide schedule generation, coordination and adjudication is also confirmed.

12.1.1 Inter-Site Message Sequence

This sequence of tests verifies the capability of the users/operators at each DAAC as well as the SMC to receive and handle broadcast messages. Users/operators at each DAAC broadcast messages to the other DAACs and the SMC and receive message receipt acknowledgments. Message traffic to/from the EOC and the EDC DAAC and the SMC is also verified.

Configuration: The subsystems needed to perform this sequence of tests are as follows: CSS/MSS, DSS, INS, ISS, & PLS.

External Interfaces: The following external interfaces (i.e. other ECS sites and data sources) needed for this sequence (both real and simulated) are listed:

LaRC ECS DAAC

GSFC ECS DAAC

SMC

EOC

Operator Position(s): The operator positions from the ECS Maintenance and Operations Position Descriptions document (607/OP2) needed to support this sequence are listed:

DAAC Resource Manager

DAAC Computer Operator

DAAC Ingest-Distribution Technician

Operational Scenario(s): There are no operations scenarios taken from the Operations Scenarios for the ECS Project: Release-A, used during this sequence of tests.

Test Dependencies: The following table identifies the test procedure(s) in a sequence of tests that should be run prior to or concurrently with a sequence or test procedure.

Test Procedure No.	Site/Procedure No.	Comments
A120110.020$E	A120110.020$L A120110.020$G A120110.020$S	Concurrent.

12.1.1.1 Inter-DAAC and DAAC-SMC Communications

TEST Procedure No.: A120110.020$E	**Date Executed:**	**Test Conductor :**

Title:	Inter-DAAC and DAAC-SMC Communications
Objective:	This procedure tests the capability of the EDC DAAC to sequentially send messages to the other Release A DAACs and to the SMC. The EDC DAAC also sends messages to the EOC. The capability of the EDC DAAC to receive and process acknowledgments of message receipt is also verified. In addition, the EOC and the SMC send messages to the EDC DAAC and receive acknowledgments of message receipt in return.

Requirements	Acceptance Criteria
EOSD0730#A	This requirement is verified through test. Each ECS element shall be capable of verifying the fidelity of the ECS element interface to: a. Other ECS elements at any time during the lifetime of the ECS b. Entities external to ECS at any time during the lifetime of the ECS During the test, the tester accesses the email and FTP clients and sends an email message and planning, scheduling, and directive data files to the other Release A DAACs, the SMC, and the EOC. Acknowledgments of message receipt are then received and processed. The EDC DAAC also receives email and planning, scheduling and directive data files from the SMC and EOC and responds with acknowledgments of message receipt. Item b is not verified in this test. Item b is verified at the EDC ECS DAAC in test procedure A080180.050$E.

Test Inputs:

Data Set Name	Data Set ID	File Name	Description	Version
PLANNING_001	TBD	TBD	TBD	1
SCHEDULE_001	TBD	TBD	TBD	1
DIRECTIVE_001	TBD	TBD	TBD	1
EMAIL_001	TBD	TBD	TBD	1

Step-By-Step Procedures		
Step No.	**Input Action / Expected Results**	**Pass / Fail / Comments**
10	DAAC Resource Manager: Coordinate email transfer with LaRC DAAC, GSFC DAAC, SMC, and EOC.	
20	DAAC Ingest-Distribution Technician: Access Communications Server and invoke email client.	
30	DAAC Ingest-Distribution Technician: Specify email address at LaRC DAAC to which message is to be sent. Specify subject and body of message to be sent. Send email message to LaRC DAAC.	
40	Expected Results: LaRC DAAC receives the email message.	
50	DAAC Ingest-Distribution Technician: Specify email address at GSFC DAAC to which message is to be sent. Specify subject and body of message to be sent. Send email message to GSFC DAAC.	
60	Expected Results: EDC DAAC receives the email message.	
70	DAAC Ingest-Distribution Technician: Specify email address at SMC DAAC to which message is to be sent. Specify subject and body of message to be sent. Send email message to SMC DAAC.	
80	Expected Results: SMC DAAC receives the email message.	
90	DAAC Ingest-Distribution Technician: Specify email address at EOC DAAC to which message is to be sent. Specify subject and body of message to be sent. Send email message to EOC DAAC.	
100	Expected Results: EOC DAAC receives the email message.	
110	DAAC Computer Operator: Verify that the email logs reflect the transmission of email message to LaRC DAAC and receipt of message acknowledgment.	
120	Expected Results: email logs must verify message transmission and receipt of acknowledgment.	
130	DAAC Computer Operator: Verify that the email logs reflect the transmission of email message to GSFC DAAC and receipt of message acknowledgment.	
140	Expected Results: email logs must verify message transmission and receipt of acknowledgment.	
150	DAAC Computer Operator: Verify that the email logs reflect the transmission of email message to the SMC and receipt of message acknowledgment.	
160	Expected Results: email logs must verify message transmission and receipt of acknowledgment.	
170	DAAC Computer Operator: Verify that the email logs reflect the transmission of email message to the EOC and receipt of message acknowledgment.	
180	Expected Results: email logs must verify message transmission and receipt of acknowledgment.	

190	DAAC Resource Manager: Coordinate FTP transfer with LaRC DAAC, GSFC DAAC, SMC, and EOC.	
200	DAAC Ingest-Distribution Technician: Access Communications Server and invoke FTP client.	
210	DAAC Ingest-Distribution Technician: Establish FTP connectivity with the LaRC DAAC.	
220	DAAC Ingest-Distribution Technician: Specify FTP destination at LaRC DAAC to which Planning, Scheduling, and Directive data files are to be sent.	
230	DAAC Ingest-Distribution Technician: FTP Planning and Scheduling data files to LaRC DAAC.	
240	DAAC Ingest-Distribution Technician: FTP Directive data file to LaRC DAAC.	
250	Expected Results: Message stating the transfer of the Planning, Scheduling, and Directive data files to the LaRC DAAC.	
260	DAAC Ingest-Distribution Technician: Establish FTP connectivity with the GSFC DAAC.	
270	DAAC Ingest-Distribution Technician: Specify FTP destination at GSFC DAAC to which Planning, Scheduling, and Directive data files are sent.	
280	DAAC Ingest-Distribution Technician: FTP Planning and Scheduling data files to GSFC DAAC.	
290	DAAC Ingest-Distribution Technician: FTP Directive data file to GSFC DAAC.	
300	Expected Results: Message stating the transfer of the Planning, Scheduling, and Directive data files to the GSFC DAAC.	
310	DAAC Ingest-Distribution Technician: Establish FTP connectivity with the SMC.	
320	DAAC Ingest-Distribution Technician: Specify FTP destination at the SMC to which Planning, Scheduling, and Directive data files are sent.	
330	DAAC Ingest-Distribution Technician: FTP Planning and Scheduling data files to the SMC.	
340	DAAC Ingest-Distribution Technician: FTP Directive data file to the SMC.	
350	Expected Results: Message stating the transfer of the Planning, Scheduling, and Directive data files to the SMC.	
360	DAAC Ingest-Distribution Technician: Establish FTP connectivity with the EOC.	
370	DAAC Ingest-Distribution Technician: Specify FTP destination at the EOC to which Planning, Scheduling and Directive data files are sent.	
380	DAAC Ingest-Distribution Technician: FTP Planning and Scheduling data files to the EOC.	
390	DAAC Ingest-Distribution Technician: FTP Directive data file to the EOC.	
400	Expected Results: Message stating the transfer of the Planning, Scheduling, and Directive data files to the EOC.	
410	DAAC Resource Manager: Coordinate email transfer with the SMC.	

420	DAAC Ingest-Distribution Technician: Receive email message from the SMC.	
430	Expected Results: email logs must verify receipt of email message from the SMC and transmission of message receipt acknowledgment to the SMC.	
440	DAAC Resource Manager: Coordinate FTP transfer with the SMC.	
450	DAAC Ingest-Distribution Technician: Access Communications Server and invoke FTP client.	
460	DAAC Ingest-Distribution Technician: Establish FTP connectivity with the SMC.	
470	Expected Results: Receipt of Planning, Scheduling, and Directive data files from the SMC.	
480	DAAC Computer Operator: Verify that the FTP logs reflect the receipt of the Planning, Scheduling, and Directive data files from the SMC and the transmission of the message receipt acknowledgment to the SMC.	
490	DAAC Resource Manager: Coordinate email transfer with the EOC.	
500	DAAC Ingest-Distribution Technician: Receive email message from the EOC.	
510	Expected Results: email logs must verify receipt of email message from the EOC and transmission of message receipt acknowledgment to the EOC.	
520	DAAC Resource Manager: Coordinate FTP transfer with the EOC.	
530	DAAC Ingest-Distribution Technician: Access Communications Server and invoke FTP client.	
540	DAAC Ingest-Distribution Technician: Establish FTP connectivity with the EOC.	
550	Expected Results: Receipt of Planning, Scheduling, and Directive data files from the EOC.	
560	DAAC Computer Operator: Verify that the FTP logs reflect the receipt of the Planning, Scheduling, and Directive data files from the EOC and the transmission of the message receipt acknowledgment to the EOC. Compare records of messages sent to LaRC DAAC, GSFC DAAC, SMC and EOC with the logs that contain the message receipt acknowledgments.	
570	Tester: Coordinate a printout of messages received at all of the sites for later analysis.	

Data Reduction and Analysis Steps:

A. The following materials must be secured for analysis at the end of the procedure:

1. email Log Printout
2. Administrator Log Printout of FTP Activities.

B. Analysis of the email Log Printout must verify that all email activities are completed to required specifications.

C. Compare messages received to messages sent. Email transmissions must verify that the integrity of the messages is consistent before and after transmission.

D. Analysis of FTP Log Printout must verify that the files are transferred to the required directory without corruption.

Signature:	**Date:**

12.1.2 Multi-Site System Management Sequence

This sequence is not performed at the EDC DAAC.

12.1.2.1 Schedule Generation, Coordination and Adjudication Support

This test is not performed at the EDC DAAC.

12.1.2.2 TRMM and AM-1 Resource Scheduling Support

This test is not performed at the EDC DAAC.

12.1.2.3 SMC Support to Integration Test & Simulation Activities

This test is not performed at the EDC DAAC.

12.2 TRMM Mission Support Scenario

This sequence is not performed at the EDC DAAC.

12.2.1 SDPF Data Handling and Processing Sequence

This sequence is not performed at the EDC DAAC.

12.2.2 TSDIS Data Handling Sequence

This sequence is not performed at the EDC DAAC.

12.2.2.1 VIRS, PR, TMI, and GV Data Ingest and Store

This test is not performed at the EDC DAAC.

12.2.3 TRMM Data Product Distribution

This sequence is not performed at the EDC DAAC.

12.2.3.1 TRMM Data Product Distribution

This test is not performed at the EDC DAAC.

12.2.4 Data Accounting Sequence

This sequence is not performed at the EDC DAAC.

12.2.4.1 Data Product/Data Receipt Accounting

This test is not performed at the EDC DAAC.

12.3 AM-1 End-to-End Scenario

This scenario does not apply to the EDC DAAC.

12.4 Science Data Access and Interoperability Scenario

This scenario demonstrates that an EOS investigator can access, receive, exchange, and store assorted data sets and information among ECS DAAC sites, the Version 0 System and the Larry Server. The scenario confirms that a scientist can perform multi-site data search and retrieval; retrieve science algorithms and produce science data products; and store the data products and associated metadata in formats compatible with these systems. The scenario describes the sequential process of searching for and accessing input data sets, including any required ancillary data; manipulating and analyzing these data sets; using corresponding algorithms to develop data products; generating and/or updating metadata descriptions of these products; and storing these products and the new metadata in standard formats within the ECS. This scenario also confirms catalog Interoperability between the ECS DAACs, the V0 DAACs and the Larry Server.

12.4.1 Science Data Search and Retrieval Sequence

This sequence is not performed at the EDC DAAC.

12.4.1.1 Multi-Site Data Search and Access

This test is not performed at the EDC DAAC.

12.4.1.2 Data Receipt and Storage

This test is not performed at the EDC DAAC.

12.4.1.3 Science Ancillary Data Access

This test is not performed at the EDC DAAC.

12.4.2.1 Science algorithm Retrieval and Compatibility

This test is not performed at the EDC DAAC.

12.4.3.1 Metadata Production and Updating

This test is not performed at the EDC DAAC.

12.4.3.2 Metadata Retrieval

This test is not performed at the EDC DAAC.

12.4.4 ECS Data Set Interoperability Sequence

This sequence is not performed at the EDC DAAC.

12.4.4.1 ECS DAAC and V0 DAAC Interoperability

This test is not performed at the EDC DAAC.

12.4.4.2 NOAA Data Centers/ECS DAAC Interoperability

This test is not performed at the EDC DAAC.

12.5 System Performance Scenario

The system performance scenario demonstrates overall ECS performance capabilities as well as the ability of ECS to expand and evolve without changes to design. The focus is on performance measures which are distributed among several elements and cannot be confirmed by single element testing. Other performance measures are the ability to handling triple the average daily rate of science data, handling transactions within prescribed response time envelops, confirming archiving capacity of DAACs, and archiving triple the average daily rate of science data and distributing data within the required times.

The performance requirements, as specified in ECS documentation, are verified under specified operational conditions. The emphasis is on testing in a simulated or near real operational environment, typifying moderately loaded and busy system conditions. Response time, archiving capacity and expansion capability performance measures are emphasized.

The scenario verifies the ECS capability to generate and gather statistics and measure performance pertaining to DAAC operations and end-to-end message traffic. Measurement and analysis of the message traffic, resource utilization and operational statistics are used to confirm ECS system performance.

12.5.1 Data Ingest, Data Server and Data Distribution Performance Sequence

This sequence is not performed at the EDC DAAC.

12.5.1.1 High Data Rate Ingest, Archiving and Retrieval

This test is not performed at the EDC DAAC.

12.5.1.2 Ingest and Archiving of Triple the Average Data Rates

This test is not performed at the EDC DAAC.

12.5.1.3 GSFC DAAC Data Reprocessing Support and Archiving

This test is not performed at the EDC DAAC.

12.5.2 System Response Time Performance Sequence

This sequence is not performed at the EDC DAAC.

12.5.2.1 Client Server Response Time Performance

This test is not performed at the EDC DAAC.

12.5.2.2 Data Access Retrieval and Transmission Performance

This test is not performed at the EDC DAAC.

12.5.3 ECS Sizing, Evolution, and Growth Sequence

This sequence verifies through analysis the capability of the ECS to accommodate an expansion of PGS capabilities by a factor of 10 without major design changes and to provide four times the normal processing capability to process all relevant EOS science data. Analysis is also performed to verify the that the ECS has adequate growth and evolution capabilities.

There are no step-by-step procedures associated with these analysis in this sequence. Papers detailing the analysis approach and results will be produced. This sequence will not be performed at the EDC ECS DAAC. The papers will be produced at the ECS Development Facility and will address the ECS as a whole.

12.5.3.1 Accommodation of ECS Expansion Analysis

This test is not performed at the EDC DAAC.

12.5.3.2 ECS Growth and Evolution Adequacy Analyses

This test is not performed at the EDC DAAC.

12.5.4 ECS Testability and Overall Capabilities Sequence

This sequence is not performed at the EDC DAAC.

12.5.4.1 Test Support in an Operational DAAC

This test is not performed at the EDC DAAC.

12.5.4.2 Support of Life Cycle Testing

This test is not performed at the EDC DAAC.

12.5.4.3 ECS Overall Capabilities

This test is not performed at the EDC DAAC.

Appendix A. Test Sequences Mapped to External Interfaces

The left column of this table lists each interface external to the Release A ECS EDC DAAC. In the right column is a list of test sequences which contains tests involving that external interface.

External Interface	EDC Test Sequence
SMC	8.1.5 Site Maintenance Sequence 8.1.7 Facilities Interface Sequence 8.3.1 Enhancements Sequence 8.4.1 Resource Management Sequence 8.4.3 Logistics Management Sequence 8.4.4 Training Management Sequence 8.4.5 Inventory Management Sequence 8.4.6 Quality Management Sequence 8.4.7 Policies and Procedures Management Sequence 8.5.1 Metrics Sequence 8.5.2 Performance Monitoring, Analysis & Testing Sequence 8.6.1 Fault Management Sequence 8.6.2 Security Management Sequence 8.6.4 Report Generation Sequence 10.2.3 EDC SCF/ECS Sequence 12.1.1 Inter-Site Message Sequence
GSFC V0 DAAC	8.1.7 Facilities Interface Sequence
ASTER SCF	8.1.7 Facilities Interface Sequence 10.2.3 EDC SCF/ECS Sequence
MODIS SCF	8.1.7 Facilities Interface Sequence 10.2.3 EDC SCF/ECS Sequence

External Interface	EDC Test Sequence
GSFC ECS DAAC	8.6.1 Fault Management Sequence 12.1.1 Inter-Site Message Sequence
LaRC V0 DAAC	8.1.7 Facilities Interface Sequence
EDC V0 DAAC	8.1.7 Facilities Interface Sequence 10.1.2 ECS/Version 0 (V0) System Interoperability Sequence 10.2.3 EDC SCF/ECS Sequence
MSFC V0 DAAC	8.1.7 Facilities Interface Sequence
LaRC ECS DAAC	8.3.1 Enhancements Sequence 8.6.1 Fault Management Sequence 12.1.1 Inter-Site Message Sequence
EDOS (simulated)	9.1.3 Early AM-1 Interface Test Support Sequence
LPS	9.2.4 Higher Level Processed Data Receipt from EPDS (Landsat-7) Sequence
EOC	8.6.1 Fault Management Sequence 12.1.1 Inter-Site Message Sequence

Appendix B. Test Sequences Mapped to Operations Scenarios

The left column of this table lists each operational scenario from the ECS Operations Scenarios - Release A (605/OP1). In the right column is a list of test sequences which contains tests involving that operational scenario.

Table B-1. Test Sequences Mapped to Operations Scenarios

Operational Scenario	Test Sequence Number
3.1 Computer System Administration Activities	
3.1.1 ECS System Shutdown/Startup Scenario	**8.1.2 Site Start-up Sequence**
3.1.2 Computer System Administration Backup & Restore/Recovery	**8.1.4 Site Shutdown/Recovery Sequence** **8.1.6 Site Data/Metadata/Information Management Sequence**
3.2 Problem Management Activities	
3.2.1 Trouble Ticket and Problem Tracking Scenario	**8.6.1 Fault Management Sequence**
3.3 Fault Management Activities	**8.4.7 Policies and Procedures Management Sequence**
3.3.1 Production Failure Scenario	
3.4 Configuration Management (CM) Activities	**8.4.5 Inventory Management Sequence**
3.4.1 COTS Hardware Problem Scenario	
3.4.2 Hardware Emergency Change Scenario	
3.4.3 COTS Software Problem Scenario	
3.4.4 Custom Software Problem Scenario	
3.4.5 COTS Software Upgrade Scenario	

Operational Scenario	Test Sequence Number
3.4.6 Add New Science Algorithm Scenario	
3.4.7 System Enhancement Request Scenario	8.3.1 Enhancements Sequence
3.5 Performance Management Activities	8.4.6 Quality Management Sequence
3.5.1 Operations Support Scenario	8.5.1 Metrics Sequence
3.5.2 User Notes Performance Degradation	8.5.1 Metrics Sequence 8.5.2 Performance Monitoring, Analysis & Testing Sequence
3.5.3 Preparing for New Algorithm Scenario	8.5.2 Performance Monitoring, Analysis & Testing Sequence
3.5.4 Performance Trending Scenario	8.5.2 Performance Monitoring, Analysis & Testing Sequence
3.6 Security Management	
3.6.1 Security Management Login Failure Scenario	8.6.2 Security Management Sequence
3.6.2 Accountability Management Create User Account Scenario	8.6.3 Accounting and Accountability Sequence
3.7 Resource Planning Activities	8.4.1 Resource Management Sequence
3.7.1 Resource Planning Scenario	8.5.2 Performance Monitoring, Analysis & Testing Sequence
3.8 Resource Management and Control Activities	8.4.1 Resource Management Sequence
3.8.1 Data Processing Host Routine Maintenance Scenario	
3.8.2 Installation of Software Upgrade Scenario	
3.9 Science Data Ingest Activities	
3.9.1 TRMM Level 0 Data Ingest Scenario	
3.9.2 TRMM Data Ingest "Fault" Scenario	
3.9.3 TRMM Ancillary Data Ingest Scenario	
3.9.4 Hard Media Ingest Scenario	
3.9.5 Version 0 Data Ingest Scenario	
3.10 Science Data Archival Activities	
3.10.1 Startup of a New Data Server Scenario (Nominal)	
3.10.2 Data Insertion Scenario (nominal)	
3.10.3 Data Insertion Scenario (fault)	
3.11 Science Data Distribution Activities	
3.11.1 Network Data Distribution (Pull) Scenario (Nominal)	8.6.3 Accounting and Accountability Sequence

Operational Scenario	Test Sequence Number
3.11.2 Network Data Distribution (Push) Scenario (Nominal)	
3.11.3 Network Data Distribution (Push) Scenario (Fault)	
3.11.4 Hard Media Distribution Scenario	
3.11.5 Network Data Distribution (Pull) Scenario	
3.12 Production Planning Activities	
3.12.1 Routine Production Planning Scenario	
3.12.2 Replanning Production Scenario	
3.13 Production Processing	
3.13.1 Normal Production Processing Scenario	
3.13.2 Production Processing Job Anomaly Scenario	
3.13.3 Production Processing Job Modification Scenario	
3.14 User Services Activities	
3.14.1a End-to-End Order Tracking Scenario - Hard Media	
3.14.1b End-to-End Order Tracking Scenario - FTP	
3.14.2 Standard Procedures (Login) Scenario	
3.14.3 System Status Scenario	
3.14.4 Place an Order for a Potential User Scenario	
3.14.5 Non Conformance Report (Software problem) Scenario	8.6.1 Fault Management Sequence
3.14.6 Lost User Password Scenario	

This page intentionally left blank.

Appendix C. Test Procedures Mapped to M&O Operations Manual

This table lists each of the maintenance procedures from the Maintenance and Operations Procedures (DID 611) in the left column, and in the right column a list of test procedures which use that procedure.

Table C-1. Test Procedures Mapped to M&O Operations Manual

Mission Operations Procedures for the ECS Project	Test Procedure Paragraph #
3. SYSTEM ADMINISTRATION	
3.1 System Startup and Shutdown	
3.1.1 Startup	
3.1.1.1 Cold - By Subsystem	
3.1.1.2 Warm - By Server Software	
3.1.2 Shutdown	
3.1.2.1 Normal - By Subsystem	
3.1.2.2 Emergency - By Subsystem	
3.1.2.3 Server - By Server Software	
3.1.3 Failover	
3.2 System Backup and Restore	
3.2.1 Incremental Backup	
3.2.2 Full Backup	
3.2.3 File Restore	
3.2.4 Complete System Restore	
3.2.5 Tape Handling	
3.2.5.1 Indexing Tapes	
3.2.5.2 Labeling Tapes	
3.3 System Log Maintenance	
3.4 User Administration	
3.4.1 Adding a User	
3.4.2 Deleting a User	
3.4.3 Changing a User Account Configuration	
3.4.4 Changing User Access Privileges	
3.4.5 Changing a User Password	
3.4.6 Checking a File/Directory Access Privilege Status	
3.4.7 Changing a File/Directory Access Privilege	
3.4.8 Moving a User's Home Directory	
3.5 Installing a New Workstation	
3.5.1 Preparation	
3.5.1.1 Hardware	
3.5.1.2 Network Configuration	
3.5.2 Installation	
3.5.2.1 Hardware	
3.5.2.1.1 Reporting to Inventory	
3.5.2.2 Operating System Installation - By Operating System Type	
3.5.2.2.1 Solaris 2.4 Operating System Installation	
3.5.2.2.2 HP-UX 9.05 Operating System Installation	

Mission Operations Procedures for the ECS Project	Test Procedure Paragraph #
3.5.2.2.3 IRIX 5.3 and 6.2 Operating Systems Installation	
3.5.2.2.4 NCD Operating System Installation	
3.5.2.3 Software	
3.5.2.3.1 Custom	
3.5.2.3.2 COTS	
3.5.3 Testing and Verification	
3.5.3.1 Reboot	
3.5.3.1.1 SGI, HP and Sun	
3.5.3.1.2 NCD	
3.5.3.2 Logging In	
3.5.3.3 Test Environment	
3.6 DCE Configuration	
3.6.1 Initial Cell	
3.6.2 DTS Servers	
3.6.3 Additional CDS Servers	
3.6.4 Security and CDS Client Systems	
3.6.4.1 Unconfiguring DCE Client	
3.6.5 DTS Clerks	
3.6.6 CDS Servers	
3.6.7 Creating a Security Server Replica	
4. DATABASE ADMINISTRATION	
4.1 Product Installation and Disk Storage Management	
4.1.1 Installing SQL Server and Related Products and Upgrading New Version of SQL Server Products	
4.1.2 Migrating Databases to New Version SQL Server	
4.1.3 Allocating Resources	
4.1.3.1 Allocating Disk Space: Creating Database Devices, Maintaining Database Segments	
4.1.4 Monitoring and Managing Resource Utilization	
4.1.4.1 Use of Available Disk Space, Memory, Connection Error Logs, State of Transaction Logs, Device Problems, etc.	
4.2 SQL Server Lifecycle Maintenance	
4.2.1 Starting the Server	
4.2.2 Shutting Down the Server	
4.3 SQL Server Logins and Privileges	
4.3.1 Creating SQL Server Login Accounts	
4.3.2 Add User to Database(s)	
4.3.3 Granting Access Privileges	
To grant access privileges, the DBA must have the following TME administrator roles:	
4.3.4 Modifying Access Privileges	
4.4 Database Integrity	
4.4.1 Checking Consistency	
4.5 Database Backup and Recovery	
4.5.1 Database Backup	
4.5.2 Transaction Log Backup	
4.6 ECS DAAC-Configured Databases	
4.6.1 Database Size Estimates and Planning	
4.6.2 Database-unique Attributes	
4.6.3 Database Reports	
4.7 Database Tuning and Performance Monitoring	

Mission Operations Procedures for the ECS Project	Test Procedure Paragraph #
4.7.1 Design and Indexing	
4.7.2 Queries	
4.7.3 Monitoring and Boosting Performance	
4.8 Troubleshooting	
4.8.1 Diagnosing Database System Problems	
4.8.1.1 Reports	
4.8.1.2 Queries	
4.8.2 On-call User Support and Emergency Response	
5. SECURITY SERVICES	
5.1 Running Security Management Log Analyst Program	
5.2 Reviewing User Activity Data	
5.3 Monitoring and Reviewing User Audit Trail Information	
5.4 Creating a DES User Key	
5.4 Kerberos Authentication	
5.5 SATAN	
5.6 Using Crack	
5.7 Npasswd	
5.8 Tcp_wrappers	
5.9 Tripwire	
5.10 Recovering from Security Breaches	
5.11 Reporting Security Breaches	
6. NETWORK ADMINISTRATION	
6.1 HPOpenView Network Node Manager (NNM)	
6.1.1 Starting NNM (Network Node Manager)	
6.1.2 Adding a Network Object	
6.1.3 Adding a Segment Object	
6.1.4 Adding a Node Object	
6.1.5 Adding an IP Interface Object	
6.1.6 Viewing the Current Network and System Configuration	
6.1.7 Viewing Network Address Information	
6.1.8 Viewing How Traffic is Routed on a Network	
6.1.9 Viewing the Services Available on a Node	
7. SYSTEM MONITORING	
7.1 Checking the Health and Status of the Network	
7.1.1 Starting NNM (Network Node Manager)	
7.1.2 Verify That an Object Is Not Functioning	
7.1.3 Looking at Maps for Color Alerts	
7.1.4 Looking at Maps for New Nodes	
7.1.5 Creating Special Submaps for Monitoring Status	
7.1.6 Checking for Event Notifications	
8. PROBLEM MANAGEMENT	
8.1 Problem Resolution Process — An Overview	
8.2 Using the Trouble Ticket System Tool	
8.2.1 Accessing the Trouble Ticket System	
8.2.1.1 Remedy's GUI Admin Tool	
8.2.1.2 Remedy's GUI Import Tool	
8.2.1.3 Remedy's Hardware Information Schema	
8.2.1.4 Remedy's GUI Notification Tool	
8.2.2 Submit a Trouble Ticket	
8.2.3 Reviewing and Modifying Open Trouble Tickets	
8.2.4 Forwarding Trouble Tickets	

Mission Operations Procedures for the ECS Project	Test Procedure Paragraph #
8.2.5 Adding Users to Remedy	
8.2.6 Changing Privileges in Remedy	
8.2.7 Modifying Remedy's Configuration	
8.2.8 Generating Trouble Ticket Reports	
8.2.9 Re-prioritization of Dated Trouble Ticket Logs	
8.3 Using Hypertext Mark-up Language (HTML) Screens	
8.3.1 ECS Trouble Ticketing HTML Submit Screen	
8.3.2 ECS Trouble Ticketing HTML Success Screen	
8.3.3 ECS Trouble Ticketing HTML List Screen	
8.3.4 ECS Trouble Ticketing HTML Detailed Screen	
8.3.5 ECS Trouble Ticketing HTML Help Screen	
8.4 Emergency Fixes	
8.5 Diagnosing Network Problems	
8.5.1 Performance Management	
9. CONFIGURATION MANAGEMENT	
9.1 Configuration Identification Procedure	
9.1.1 Purpose	
9.1.2 Applicable to	
9.1.3 References	
9.1.4 Procedures	
9.1.4.1 Extended Configuration Identification	
9.1.4.2 Other Procedures as Applicable	
9.2 Configuration Change Control Procedures	
9.2.1 Purpose	
9.2.2 Applicable to	
9.2.3 References	
9.2.4 Procedures	
9.2.4.1 Configuration Change Request Preparation	
9.2.4.2 Change Control Board Process (System and Site-level CCBs)	
9.2.4.3 Configuration Control - Deviation and Waivers	
9.3 Configuration Status Accounting Procedures	
9.3.1 Purpose	
9.3.2 Applicable to	
9.3.3 References	
9.3.4 Procedures	
9.4 Configuration Audits	
9.4.1 Purpose	
9.4.2 Applicable to	
9.4.3 References	
9.4.4 Procedures	
9.5 Data Management	
9.5.1 Purpose	
9.5.2 Applicable to	
9.5.3 References	
9.5.4 Procedures	
9.5.4.1 Information Preparation, Submittal, & Cataloguing	
9.5.4.1.1 Creation / Preparation	
9.5.4.1.2 Submission	
9.5.4.1.3 Identification and numbering	
9.5.4.1.4 Logging / Cataloguing	

Mission Operations Procedures for the ECS Project	Test Procedure Paragraph #
9.5.4.2 Information Review, Signoff, Release and Change/Revision	
9.5.4.2.1 Document/Test data Review, Release, and Change Procedures	
9.5.4.2.2 Review/Release	
9.5.4.2.3 Changes, Revision and Document Maintenance	
9.5.4.3 Information Distribution and Submission to ESDIS/ ECS	
9.5.4.3.1 Data / Document Distribution/Submittal to ESDIS/ ECS	
9.5.4.3.2 Categories of CDRL Data Submitted to ESDIS/ ECS	
9.5.4.3.3 Documentation Distribution	
9.6 Archiving Procedures for the SW CM Manager (ClearCase)	
9.6.1 Purpose	
9.6.2 Applicable to	
9.6.3 References	
9.6.4 Procedures	
9.7 SW Transfer and Installation	
9.7.1 Purpose	
9.7.2 Applicable to	
9.7.3 References	
9.7.4 Procedures	
9.7.4.1 Overview	
9.7.4.2 Operator Roles	
9.7.4.3 Detailed Procedures	
9.7.4.4 Data Activity	
9.8 Change Request Manager	
9.8.1 Configuration Change Request (CCR)	
9.8.2 Accessing Change Request Manager	
9.8.3 View a CCR	
9.8.4 Submit a CCR	
9.8.5 Change State of CCR	
9.8.5.1 Assign-Eval State	
9.8.5.2 Assign-Implement State	
9.8.5.3 Assign-Verify State	
9.8.5.4 Verify State	
9.8.5.5 Close State	
9.8.6 Modify CCR	
9.8.7 Print CCR	
9.8.8 Required Operating Environment	
9.8.8.1 Interfaces and Data Types	
9.8.8.2 Databases	
9.8.8.3 Database Schema	
9.8.8.4 Database Parameters	
9.8.8.5 Command Line Interface	
9.8.8.6 Event and Error Messages	
9.8.9 Reports	
9.8.9.1 Sample Reports	
9.8.9.1.1 Sample Report (Full Page Format)	
9.8.9.1.2 Sample Report (Three Line Format)	
9.8.9.1.3 Sample Report (Index Format)	
9.8.9.1.4 Sample Report (One Line Format)	
9.8.9.2 Report Customization	
9.9 Use of the Baseline Manager	

Mission Operations Procedures for the ECS Project	Test Procedure Paragraph #
9.9.1 Purpose	
9.9.2 Applicable to	
9.9.3 References	
9.9.4 Procedures	
10. METADATA ADMINISTRATION	
10.1 Metadata Preparation	
10.1.1 Creating Collection Level Metadata	
10.1.2 Creating Product-specific Metadata	
10.1.3 Specifying ESDT Services	
10.2 Creating ESDTs	
10.2.1 Selecting an ESDT	
10.2.2 Creating an ESDT Descriptor	
10.3 Loading Metadata	
10.3.1 Inserting ODL into DSS	
10.4 Metadata Maintenance	
10.4.1 Updating Metadata	
10.4.2 Editing Metadata	
10.4.3 Deleting Metadata	
11. SSI&T OPERATIONAL PROCEDURES	
11.1 Acquiring the Delivered Algorithm Package (DAP)	
11.1.1 Acquiring the DAP Through Ingest	
11.1.2 Acquiring the DAP via FTP	
11.2 Configuration Management	
11.2.1 Creating and Using a View in ClearCase	
11.2.2 Importing Multiple Files into ClearCase from a Directory Structure	
11.2.3 Entering a Single File into ClearCase	
11.2.4 Entering a New Directory into ClearCase	
11.2.5 Checking Out an Element from ClearCase	
11.2.6 Checking a Revised Element into ClearCase	
11.3 SSIT Manager GUI	
11.3.1 General Setup of the SSIT Manager	
11.3.2 Setup of Checklist for SSIT Manager	
11.3.3 Initial Setup of the SSIT Manager	
11.3.4 Routine Running of the SSIT Manager	
11.4 Standards Checking	
11.4.1 Checking ESDIS Standards Compliance: FORTRAN 77	
11.4.2 Checking ESDIS Standards Compliance: Fortran 90	
11.4.3 Checking ESDIS Standards Compliance: C	
11.4.4 Checking ESDIS Standards Compliance: Ada	
11.4.5 Prohibited Function Checker	
11.4.6 Checking Process Control Files	
11.5 Compiling and Linking	
11.5.1 Updating the Process Control File (PCF)	
11.5.2 Compiling Status Message Facility (SMF) Files	
11.5.3 Setting up a SDP Toolkit Environment	
11.5.4 Compiling a PGE and Linking With SCF Version of SDP Toolkit	
11.5.5 Compiling a PGE and Linking with DAAC Version of SDP Toolkit	
11.6 Updating the PDPS Database and Data Server	

Mission Operations Procedures for the ECS Project	Test Procedure Paragraph #
11.6.1 Operational Metadata Population	
11.6.2 Science Metadata Population	
11.6.3 Inserting Science Software Archive Package into Data Server	
11.6.4 Inserting Static Files into Data Server	
11.6.5 Inserting Executables into Data Server	
11.7 PGE Planning and Processing	
11.7.1 Planning Workbench	
11.7.2 Production Request Editor	
11.7.3 Profiling a PGE Executable	
11.8 File Comparison	
11.8.1 Acquiring the Output Files	
11.8.2 HDF File Comparison Using the GUI	
11.8.3 HDF File Comparison Using hdiff	
11.8.4 ASCII File Comparison	
11.8.5 Binary File Comparison	
11.8.6 Viewing Product-Created Metadata Using the EOSView Tool	
11.9 Post-Production Activities	
11.9.1 Viewing Granule and Data Dictionary Metadata	
11.9.2 Science Software Problem Tracking	
11.9.3 Science Software Defect Tracking	
11.9.4 ECS Non-Conformance Reporting	
11.10 Troubleshooting and General Investigation	
11.10.1 Examining PGE-Produced Log Files	
11.10.2 Examining the MSS Log File	
11.10.3 Extracting Prologs from the Science Software Source Files	
11.10.4 PDPS Prototype-Related Scripts and Message Files	
11.11 Miscellaneous	
11.11.1 Setting Up the Release A Newsgroups	
11.11.2 Reading Release A Newsgroups	
11.11.3 Posting to Release A Newsgroups	
12. RESOURCE PLANNING	
12.1 Create a Resource Reservation	
12.2 Edit a Resource Request	
12.3 Validate a Resource Reservation	
12.4 Approve a Resource Reservation	
12.5 View Resource Reservation Timeline	
12.6 Activate Resource Reservation Plan	
12.7 Cancel a Resource Reservation	
13. PRODUCTION PLANNING	
13.1 Create New Production Request	
13.2 Edit/Modify Production Request	
13.3 Review Data Production Requests	
13.4 Create New Production Plan	
13.5 Review Plan Timeline	
13.6 Reports	
13.6.1 Generate Standard Production Reports	
13.6.2 Generate Custom Reports	
14. PRODUCTION PROCESSING	
14.1 Configure AutoSys	

Mission Operations Procedures for the ECS Project	Test Procedure Paragraph #
14.1.1 AutoSys Runtime Options	
14.1.2 Configure Hardware Groups	
14.2 Review Hardware Status	
14.2.1 Review Hardware Status	
14.2.2 Hardware Status View Options	
14.3 Review DPR Dependencies	
14.4 Review DPR Production Timeline	
14.5 Modify Job Priority	
14.6 Review Alarms	
14.6.1 Review Alarms	
14.6.2 Alarm Selection Configuration	
14.7 Review Job Activities	
14.7.1 Review Job Activities	
14.7.2 Review Job Selection Criteria	
14.8 Modify Job Status	
14.9 Activity Log	
14.10 Job Dependency Log	
14.11 Defining Monitors/Browser	
14.11.1 Defining Monitors/Browser	
14.11.2 Monitor/Browser Reports	
14.12 Database Maintenance Time Change	
14.13 Time Synchronization	
14.13.1 Time Synchronization Procedure	
14.13.1.1 Time Synchronization Quick-Steps	
14.14 Production Reports	
15. QUALITY ASSURANCE	
15.1 DAAC Product QA	
15.2 Product QA Subscription	
15.2.1 Product QA Subscription Procedures	
15.2.1.1 Product QA Subscription Quick-Steps	
15.3 DAAC Product QA	
15.3.1 Perform DAAC Product QA Procedure	
15.3.1.1 Perform DAAC Product QA Quick-Steps	
15.2 EOSView	
15.3 Product QA Documentation	
15.5 Product QA Documentation	
15.5.1 User Comment Document (Granule & Collection) Procedure	
15.5.1.1 User Comment Document (Granule & Collection) - Quick-Steps	
15.5.2 Validation Document (Collection)	
15.5.3 Quality Text Document (Collection)	
15.5.4 Quality Explanation (Granule & Collection)	
15.5.5 Science Review Status (Granule & Collection)	
15.6 Product QA Access Restraints	
15.6.1 Product QA Access Restraints	
15.6.1.1 Product QA Access Restraints - Quick Steps	
15.7 QA Reports	
15.7.1 QA Reports	
15.7.1.1 QA Reports	
16. INGEST	

Mission Operations Procedures for the ECS Project	Test Procedure Paragraph #
16.1 ECS Ingest Tool	
16.1.1 View the Ingest History Log	
16.1.2 Ingest History Log Reports	
16.1.3 Ingest Monitor/Control	
16.1.4 Ingest Operator Tools	
16.1.4.1 Modify External Data Provider/Interactive User Information	
16.1.4.2 Modify System Parameters	
16.1.5 Media Ingest	
16.2 Operator Tools	
16.2.1 Modify External Data Provider/Interactive User Information	
16.2.1.1 E-mail Address	
16.2.1.2 Volume Threshold	
16.2.1.3 Request Threshold	
16.2.1.4 Priority Level	
16.2.2 Modify System Parameters	
16.2.2.1 Volume Threshold	
16.2.2.2 Request Threshold	
16.2.2.3 Communication Retry Count	
16.2.2.4 Communication Retry Interval	
16.2.2.5 Monitor Time	
16.2.2.6 Screen Update Time	
16.3 Ingest Processing	
16.3.1 DAN Creation	
16.3.2 Automated Network Ingest	
16.3.2.1 Starting the Automated Network Ingest Server	
16.3.2.2 Submitting a Data Availability Notice (DAN)	
16.3.2.3 Monitoring User's Ingest Status	
16.3.2.4 Viewing a Data Delivery Notice (DDN)	
16.3.2.5 Recovery from a Faulty DAN	
16.3.2.6 Recovery from a Data Ingest Failure	
16.3.3 Polling Ingest with Delivery Record (DR)	
16.3.3.1 Recovery from a Faulty DR	
16.3.3.2 Recovery from Data Ingest Failure	
16.3.4 Polling Ingest Without Delivery Record	
16.3.4.1 Recovery from Data Ingest Failure	
16.3.5 Hard Media Ingest	
17. ARCHIVE	
17.1 Storing New Data in Archive Repository	
17.1.1 Recover from Failure to Store Data	
17.2 Handling Archived Data	
17.2.1 Backing Up Archive Data	
17.2.2 Deleting Files from the Archive	
17.2.3 Archive Data Recovery/Restoration	
17.2.3.1 Use of Backup Data for Recovery	
17.2.3.2 Requesting Replacement Data from Provider	
17.3 Monitoring and Fault Notification	
17.4 Temporary Data Storage of Intermediate Files	
18. DATA DISTRIBUTION	
18.1 Media Operations	
18.1.1 Loading Tapes	

Mission Operations Procedures for the ECS Project	Test Procedure Paragraph #
18.1.2 Dismounting Tapes	
18.1.3 Tape Fault	
18.1.4 Creating Labels	
18.2 Product Shipment	
19. USER SERVICES	
19.1 ECS User Account Management	
19.1.1 Retrieve User Account/Validate a User	
19.1.1.1 Retrieve User Account/Validate a User Quick-Steps	
19.1.2 Create a User Account	
19.1.2.1 Account Information	
19.1.2.2 Personal Information	
19.1.2.3 Shipping Address	
19.1.2.4 Billing Address	
19.1.2.5 Mailing Address	
19.1.2.6 Create a User Account Quick-Steps	
19.1.3 Account Creation From URL Registration	
19.1.3.1 Account Creation From URL Registration Quick-Steps	
19.1.4 Edit/Modify an Existing Account	
19.1.4.1 Edit/Modify Account Information	
19.1.4.2 Edit/Modify Personal Information	
19.1.4.3 Edit/Modify Shipping Address	
19.1.4.4 Edit/Modify Billing Address	
19.1.4.5 Edit/Modify Mailing Address	
19.1.4.6 Edit/Modify an Existing Account Quick-Steps	
19.1.5 Deleting an ECS Account	
19.1.5.1 Deleting ECS Account Quick-Steps	
19.1.6 Canceling an ECS Account	
19.1.6.1 Canceling an ECS Account Quick-Steps	
19.1.7 Changing an ECS User's Password	
19.1.7.1 Changing an ECS User's Password Quick-Steps	
19.2 Processing an Order	
19.2.1 Create a User Contact Log Record	
19.2.1.1 How to Create a User Contact Log Record	
19.2.1.1.1 Creating a User Contact Log - Quick-Steps	
19.2.2 Retrieve User Information	
19.2.2.1 Retrieve User Account Quick-Steps	
19.2.3 Locate Data Via Search and Order Tool	
19.2.3.1 Obtain a Spatial Summary	
19.2.3.2 Obtain a Temporal Summary	
19.2.3.3 Obtain a Discrete Attribute Summary	
19.2.3.4 Browse the Search Results	
19.2.3.5 Select Granules to Order	
19.2.4 Request Price Estimate	
19.2.5 Specify Order Details	
*19.2.5.3 Provide Billing & Accounting Information	
19.2.5.4 Order Data Quick-Steps	
19.2.6 Update User Contact Log	
19.2.6.1 Update a User Contact Log Procedure	
19.2.6.1.1 Update User Contact Log Record - Quick-Steps	
19.3 Cancel an Order	

Mission Operations Procedures for the ECS Project	Test Procedure Paragraph #
19.3.1 ECS Order Tracking	
19.3.2 Cancel an Order Via DSS	
19.3.2.1 Locate Order Via Request Tracking Tool	
19.3.2.2 Cancel Order Via Science Data Server GUI	
19.3.3 Update User Contact Log	
19.3.4 Cancel an Order Quick-Steps	
19.4 Fulfilling Subscriptions	
19.4.1 Fulfilling a One-time Subscription	
19.4.2 Fulfilling an Open Ended Subscription	
19.4.3 Returning a List of Subscriptions	
19.4.4 Canceling a Subscription	
19.4.5 Fulfilling Subscriptions Quick-Steps	
19.5 Creating/Logging a Trouble Ticket	
19.6 Cross-DAAC Referral Process	
***19.7 Cross-DAAC Order Tracking**	
19.8 Guide Authoring and Maintenance	
19.8.1 Creating Guide HTML Documents	
19.8.2 Loading Guide Documents	
19.8.3 Editing Guide Documents	
20. LIBRARY ADMINISTRATION	
20.1 SEO Document Maintenance	
20.1.1 Authoring Documents	
20.1.2 Formatting Documents	
20.1.3 Importing Documents	
20.1.4 Exporting Documents	
20.1.5 Metadata Maintenance	
20.2 On-Site Document Maintenance	
20.2.1 Authoring Documents	
20.2.2 Importing Documents	
20.2.3 Formatting Documents	
20.2.4 Searching for a Document	
20.2.5 Metadata Maintenance	
20.3 Preparing Documents for Insertion into the DDSRV	
20.4 Maintenance of Document Inventory Records and Links to Configuration Items in Baseline Manager	
20.5 Document Metadata Insertion Subscription	
20.6 Document Repository Maintenance	
20.7 Document Access Control	
20.8 Retrieval of HTTP Formatted Documents	
21. COTS HARDWARE MAINTENANCE	
21.1 COTS Hardware Support - General	
21.1.1 Corrective Maintenance	
21.1.2 Preventive Maintenance	
21.1.3 Configuration Management	
21.1.4 COTS Hardware Support Safety	
21.2 COTS Hardware Support - Contract Information	
21.2.1 Management of COTS Hardware Support Contracts	
21.2.2 Contract Maintenance Terms	
21.2.3 COTS Hardware Database	
21.3 Hardware Repairs - Standard	
21.3.1 Hardware Problem Reporting	

Mission Operations Procedures for the ECS Project	Test Procedure Paragraph #
21.3.2 Initial Troubleshooting/Diagnostics	
21.3.3 Hardware Corrective Maintenance Actions	
21.3.4 Contract On-Site Hardware Support	
21.3.5 Return-to-Depot Support	
21.4 Maintenance Spares	
21.4.1 Installed Maintenance Spares	
21.4.2 Use of Maintenance Spares	
21.4.3 Return of Failed LRUs	
21.5 Non-standard Hardware Support	
21.5.1 Escalation of COTS Hardware Support Problem	
21.5.2 Time and Material (T&M) Hardware Support	
22. SOFTWARE MAINTENANCE	
22.1 COTS Software Maintenance	
22.1.1 Management of COTS Software Maintenance Contracts	
22.1.2 Management of COTS Software Licenses	
22.1.3 COTS Software Installation	
22.1.4 Obtaining COTS Software Support	
22.1.4.1 COTS Software Problem Reporting	
22.1.4.2 Troubleshooting COTS Software	
22.1.4.3 Corrective Action Reporting	
22.2 Custom Software Maintenance	
22.2.1 Implementation of Modifications	
22.2.2 Test Plans and Procedures	
22.2.3 Custom Software Installation	
22.2.3.1 Scheduling the Release	
22.2.3.2 Operations and User Notification	
22.2.3.3 Maintenance Changes to the On-Site SW Change Manager Library	
22.2.3.3.1 Branching Approach	
22.2.3.3.2 Configuring the Operational Environment	
22.2.3.3.3 Performing Merge Activities	
22.2.3.3.4 Configuration Specifications	
22.2.3.3.5 Branch Naming Conventions	
22.2.3.4 Creating the SW Build Using SW Change Manager (ClearCase)	
22.2.3.5 Promoting Software Using SW Change Manager (ClearCase)	
22.2.3.5.1 "Change State Script" Description	
22.2.3.5.2 Promotion_level Script Description	
22.2.3.6 Installing the New Release	
22.2.4 Obtaining Software Support	
22.2.4.1 SW Problem Reporting	
22.2.4.2 Troubleshooting	
22.2.4.3 Corrective Action Reporting	
22.2.5 Science Software	
23. PROPERTY MANAGEMENT	
23.1 Receipt of Equipment and Software	
23.2 Equipment Tagging	
23.3 Property Records and Reporting	
23.3.1 Maintaining Property Records	
23.3.2 Property Reporting	

Mission Operations Procedures for the ECS Project	Test Procedure Paragraph #
23.3.3 Reporting Loss, Theft, Damage or Destruction	
23.3.4 Obtaining Relief from Accountability	
23.4 Equipment Relocation	
23.4.1 Intra-site Relocation	
23.4.2 Inter-site Relocation	
23.4.3 Relocation Off-site for Vendor Repairs	
23.4.4 External Transfers	
23.5 Inventories and Audits	
23.6 Storage	
23.6.1 Segregation Requirements	
23.6.2 Stock Rotation	
23.6.3 Physical Security	
23.7 Packing and Shipping	
24. INSTALLATION PLANNING	
24.1 Responsibilities	
24.2 Process Description	
24.3 Maintenance of Facility and Network Diagrams	
24.4 Maintenance of LAN Cable Management Schema	
25. COTS TRAINING	
25.1 Requesting COTS Training	
25.2 Coordinating COTS Training	
25.3 Canceling/Rescheduling COTS Training	
25.4 Maintenance of COTS Training Records	
25.5 Contractor COTS Training Funds Accounting	
26. ON-LINE ADVERTISING SERVICE ADMINISTRATION	
26.1 Accessing ESOD	
26.2 ESOD Administration	
26.2.1 Create a Moderation Group	
26.2.2 Update a Moderation Group	
26.2.3 Delete a Moderation Group	
26.3 ESOD Moderation	
26.4 On-line Advertising Service Configuration Files	

This page intentionally left blank.

Appendix D. Test Sequences Mapped to GSFC Hardware

This table lists each piece of hardware at the Release A ECS GSFC DAAC in the left column, and in the right column a list of test procedures which use that hardware as part of the procedure(s).

(Note: This table was requested by GSFC DAAC. It will be filled in as the information becomes available)

Table D-1 Test Sequences Mapped to SMC Hardware

Subsystem	HWCI/CSCI	Platform	Custom Executables	COTS	Test Procedure Paragraph #
CSS	DCHCI	CSS-SMC-1 (CSS server) and MSS-SMC-5 (MSS server)	DCE Directory, Security and Time servers, peer agent	Op sys, snmp agent, dce, oodce, motif, x11r5, clearcase client, net.h++, tools.h++, dbtools.h++, Remedy*, tivoli client, wabi/office, netscape browser, mail server, Crack, Npassword, TCP Wrappers, Tripwire	
MSS	MSSHCI	MSS-SMC-5 (MSS server) and CSS-SMC-1 (CSS server)	MsAgDpty, peer agent	Op sys, snmp agent, dce, oodce, motif, x11r5, clearcase client, net.h++, tools.h++, dbtools.h++, Remedy*, tivoli client, wabi/office, netscape, Sybase server, essm, sqr wkbch, PNM, HPOV, Crack, Npassword, TCP Wrappers, Tripwire	
MSS	MSSHCI	MSS-SMC-1	Clearcase server, peer agent, Inventory change manager (SoftPC/MS Office)	Op sys, snmp agent, dce, oodce, motif, x11r5, clearcase server and client, tools.h++, dbtools.h++, Remedy, tivoli client, wabi/office, netscape server (must be configured for DNS lookup), sybase client, Crack, Npassword, TCP Wrappers, Tripwire	
MSS	MSSHCI	MSS-SMC-3 (MSS WS)	GUI executables	Op sys, snmp agent, dce, oodce, motif, x11r5, clearcase client, tools.h++, dbtools.h++, Remedy*, tivoli client, wabi/office, netscape browser, Crack, Npassword, TCP Wrappers, Tripwire	
CSS	DCHI	CSS-SMC-2 (BB server)	Ingest operator GUI, peer agent	Op sys, snmp agent, dce, oodce, motif, x11r5, clearcase client, tools.h++, dbtools.h++, Remedy*, tivoli client, wabi/office, netscape browser, Bulletin Board (NNTP), Crack, Npassword, TCP Wrappers, Tripwire	

Client	DESKT	All operator workstations and servers (if xterms access servers)	EcsDesktop	ROGUEWAVE tools.h++ OODCE DCE C/C++ Doug Young's Libtrary for Motiff/C++ 1992 Epak Widgets	
				Motif Window Manager, mwm (Solaris or SunOS) or platform-dependent alternative: Vuewm (HP), 4Dwm (SGI), NCDs (NCDwm), etc.	
				Web browser: Netscape	
				DCE OODCE Motif or CDE with equivalent Motif version ICS Builder Xcessory ICS EPak widgets RogueWave tools.h++ C/C++ compilers and debuggers	
				Doug Youngs's C++ library for Motif 1992 version ECS C++ widget wrapper library (TBD)	
Client	WKBCH		User Registration Tool User Profile Tool	Same as Client	

Appendix E. Test Procedure Format

The following contain a test procedure template, with annotations describing what each item contains.

E.1 Scenario Test Group

Each Scenario Group begins with an overview paragraph describing the Scenario Group.

E.1.1 Scenario Title

Each Scenario begins with a paragraph summarizing the Scenario.

E.1.1.1 Sequence Title

Each Sequence has a brief summary describing this sequence of tests.

Configuration: The subsystems needed to perform this sequence of tests are listed here. Appendix D contains additional detail.

External Interfaces: The external interfaces (i.e. other ECS sites and data sources) needed for a sequence (both real and simulated) are listed.

Operator Position(s): The operator positions from the ECS Maintenance and Operations Position Descriptions document (607/OP2) needed to support a sequence are listed.

Operational Scenario(s): The operations scenarios, taken from the Operations Scenarios for the ECS Project: Release-A document (605/OP1), that were used to develop tests in this sequence of tests are listed.

Test Dependencies: This table identifies the test procedure(s) in a sequence of tests that should be run prior to or concurrently with a sequence or test procedure.

Test Procedure No.	Site/Procedure No.	Comments
Insert proc. # for this volume	List site/proc. #	Prior or Concurrent

E.1.1.1.1 Procedure Title

TEST Procedure No.:	**Date Executed:**	**Test Conductor**
A unique #, taken from the Acceptance Test Plan, used to identify the test in RTM	Filled in on the date the formal test is run	The test conductor for this site

Title: The title of the test

Objective: A brief statement of the objective of this procedure, taken from the ATP test case description.

Requirements	Acceptance Criteria
Requirement i.d. from RTM (i.e. DADS1700#A	For each requirement verified in a procedure the acceptance criteria contains the following information in the order shown below: a. The Verification method (inspection, analysis, demonstration or test) b. The text of the requirement c. A brief description of HOW the requirement is verified in the test procedure. This description may specify certain functions that the system must perform, specifications or standards that must be complied with, or performance criteria (such as responses times or throughput) that must be met.

Test Inputs: For each procedure, specific test inputs are identified and listed in the table below

Data Set Name	Data Set ID	File Name	Description	Version
Descriptive name	data set identifier	name of the physical file containing the data	a brief description of what is in the file	A version control number

Step-By-Step Procedures		
Step No.	**Input Action / Expected Results**	**Pass / Fail / Comments**
10	Contains a description of a particular input, or action to be taken by a tester or operator, OR an expected result from the system under test.	Brief explanation of why a step may have failed, or a deviation from the written procedures, and a reference to an NCR, if applicable.
20		
30		
etc.		

Data Reduction and Analysis Steps:

This section describes the method used for data reduction and includes instructions necessary to complete the analysis of test results. If applicable, the XRunner and LoadRunner reports generated during script execution are also described in this section. A list of all test outputs that need to be secured after testing (i.e. screen dumps, system logs, etc.) is also included here.

Signature:	Witness or testers signature	**Date:**	Date the test is signed off

This page intentionally left blank.

Abbreviations and Acronyms

ACMHW	Access and Control Management Hardware
ADC	Affiliated Data Center
ADSVR	Advertising Data Server
AI&T	Algorithm Integration and Test
AITHW	Algorithm Integration and Test Hardware
AM-1	EOS AM Project (morning spacecraft series)
API	application programming interface
ARP	address resolution protocols
ASF	Alaska SAR Facility (DAAC)
ASTER≠	Advanced Spaceborne Thermal Emission and Reflection Radiometer (formerly ITIR)
ATC	Actual Time Command
ATP	Acceptance Test Plan
ATPR	Acceptance Test Procedures
ATT	Acceptance Test Team
AVHRR	Advanced Very High Resolution Radiometer
BER	bit error rate
BGP	boundary gateway protocol
CASE	Computer Aided Software Engineering
CAST	Computer Aided Software Test
CCR	Configuration Change Request
CCSDS	Consultative Committee for Space Data Systems
CDRL	Contract Data Requirements List
CERES	Clouds and Earth's Radiant Energy System
CIESIN	Consortium for International Earth Science Information Network
CIO	Contents Identifier Object

CLS	Client Subsystem
CM	Configuration Management
cmi	continuous measurable improvement
CMO	Configuration Management Office
COTR	Contracting Officer's Technical Representative
COTS	Commercial Off-The-Shelf (hardware or software)
CSR	Consent to Ship Review
CSS	Communications Subsystem
CZCS	Coastal Zone Color Scanner
DAAC	Distributed Active Archive Center
DAS	Daily Activity Schedule
DBMS	Data Base Management System
DCN	Document Change Notice
DDICT	Data Dictionary
DDTS	Distributed Defect Tracking System
DDN	Data Delivery Notice
DDS	Data Document Server
DDIST	Data Distribution
DES	Data Encryption Standard
DHF	Data Handling Facility
DIPHW	Distribution and Ingest Peripheral Hardware
DID	Data Item Description
DIT	Data Ingest Technician
DIF	Data Interface Facility (EDOS);
DMGHW	Data Management Hardware Sytstem
DMS	Data Management System
DOF	Distributed Object Framework
DPS	Data Processing Subsystem
DSA	directory service agent

DSN	Deep Space Network
DSS	Data Server Subsystem
EAS	ECS Advertising Service
Ecom	ECS Communications
ECS	EOSDIS Core System
EDC	EROS Data Center (DAAC)
EDF	ECS Development Facility
EDHS	ECS Data Handling System
EDOS	EOS Data and Operations System
ED-Net	EOSDIS Backbone Network
EDU	Exchange Data Unit
EGS	EOS Ground System
EMC	Enterprise Monitoring and Coordination
EOC	EOS Operations Center
EOS	Earth Observing System
EOSDIS	Earth Observing System Data and Information System
ERBE	Earth Radiation Budget Experiment
EROS	Earth Resources Observation System
ESDIS	Earth Science Data and Information System
ESN	ECS Science Network
ETS	EOSDIS Test System
F&PRS	Functional and Performance Requirement Specification
FCA	Functional Configuration Audits
FDF	Flight Dynamics Facility
FOS	Flight Operations System
FOT	Flight Operations Team
FTP	File Transfer Protocol
GATT	Government Acceptance Test Team
GCDIS	Global Change Data Information System

GCMO	Global Change Master Directory
GDS	ground data system
GN	Ground Network
GPCP	Global Precipitation Climatology Project
GPI	GOES Precipitation Index
GSFC	Goddard Space Flight Center
GUI	Graphic User Interface
GV	TRMM Ground Verification
HTML	Hypet-Text Markup Language
I/O	Input/Output
I&T	Integration and Test
IATO	Independent Acceptance Test Organization
ICLHW	Ingest Client Hardware
ICMP	Internet Control Message Protocol
IDR	Incremental Design Review
IGS	International Ground Station
ILS	Integrated Logistics Support
IMS	Information Management System
INS	Ingest Subsystem
IOS	Interoperability Subsystem
IOT	Instrument Operations Team
IP	Internet Protocol
IR	Interim Release
IRD	Interface Requirements Document
ISCCP	International Satellite Cloud Climatology Project
ISS	Internetworking Subsystem
ISS	Information Subsystem
IST	Instrument Support Terminal
IV&V	Independent Verification and Validation

JPL	Jet Propulsion Laboratory
L0–L4	Level 0 through Level 4 data
L0R	Level 0 Reformatted
LPS	Landsat Processing System
L-7	Landsat 7
LAN	Local Area Network
LaRC	Langley Research Center
LIS	Lighting Imaging Sensor
LSM	Local System Management
LSM	Local Site Manager
LTIP	Long Term Instrument Plan
LTSP	Long Term Spacecraft Plan
LVOs	Label Value Objects
M&O	Maintenance and Operations
MAC	Medium Access Control
MDT	mean down time
MIB	Management Information Base
MIME	Multi-purpose Internet Mail Extension
MISR	Multi-Angle Imaging SpectroRadiometer
MITI	Ministry of International Trade and Industry (Japan)
MODIS	Moderate Resolution Imaging Spectrometer
MOPITT	Measurements of Pollution in the Troposphere
NA	Network Analysis
MSFC	Marshall Space Flight Center
MSS	Management Subsystem
MTBM	Mean-Time Between Maintenance
NAB	National Association of Broadcasters
NARA	National Archives and Records Administration
NASA	National Aeronautics and Space Administration

NASCOM	NASA Communications
NCC	Network Communication Center
NCDC	National Climatic Data Center
NCR	Non Conformance Report
NGDC	National Geophysical Data Center
NIST	National Institute for Standards and Technology
NLDN	National Lightening Detection Network
NMC	National Meteorological Center (NOAA)
NOAA	National Oceanic and Atmospheric Administration
NODC	National Oceanic Data Center
NOLAN	Nascom Operational Local Area Network
NRCA	Nonconformance Reporting and Corrective Action
NSI	NASA Science Internet
NSIDC	National Snow and Ice Data Center
OA	Office Automation
ODC	Other Data Center
ODFs	Operational Data Files
OJT	On-the-Job Training
ORNL	Oak Ridge National Laboratory
OSI	Open Systems Interconnection
OSPF	Open Shortest Path First (routing protocol)
OTD	Optical Transient Detector
PA	Product Assurance
PCAs	Physical Configuration Audits
PDPS	Product Development and Processing System
PDR	Preliminary Design Review
PDS	Production Data Set
PIs	Principal Investigators
PLS	Planning Subsystem

PLNHW	Planning Hardware
PM	Performance Manager
PR	Precipitation Radar
QA	Quality Assurance
QO	Quality Office
RIO	Reference Identifier Object
RIP	Routing Information Protocol (207)
RM	Resource Manager
RMA	Reliability, Maintainability, Availability
RRR	Release Readiness Review
RTM	Requirements & Traceability Management
S/C	spacecraft
SA	System Administrator
SAA	Satellite Active Archive
SAGE	Stratospheric Aerosol and Gas Experiment
SAR	Synthetic Aperture Radar
SCC	Spacecraft Computer
SCF	Science Computing Facility
SDL	Software Development Library
SDPF	Sensor Data Processing Facility
SDPS	Science Data Processing Segment
SDR	System Design Review
SDSVR	Science Data Server
SI&T	System Integration and Test Organization
SMC	System Management Center
SME	Subject Matter Expert
SMMR	Scanning Multichannel Microwave Radiometer
SMPTE	Society of Motion Picture & Television Engineers
SMS	Systems Management Subsystem

SNMP	Simple Network Management Protocol
SORR	Segment Operational Readiness Review
SPRHW	Science Processing Hardware
SSITT	Science Software Integration and Test Team
SSM/I	Special Sensor Microwave/Imager
SSR	Solid State Recorder
SUT	System Under Test
SW	Software
SWE	Snow Water Equivalent
TB	tera-byte
TDRSS	Tracking and Data Relay Satellite System
TMI	TRMM Microwave Imager
TOMS	Total Ozone Mapping Spectometer
TOO	Target of Opportunity
TOVS	Television Infrared Observing Satellite (TIOS) Operational Vertical Sounder
TRMM	Tropical Rainfall Measurement Mission
TRR	Test Readiness Review
TSDIS	TRMM Science Data and Information Systems
TSL	Test Script Language
TSS	TDRSS Service Session
UR	Universal Reference
V0	Version 0
VIRS	Visible Infrared Scanner
WAN	Wide Area Network
WOTS	Wallops Orbital Tracking Station

Glossary

Analysis	Technical or mathematical evaluation based on calculation, interpolation, or other analytical methods. Analysis involves the processing of accumulated data obtained from other verification methods.
Consent to Ship	Review to determine the readiness of a release for transition sites Review (CSR) for integration testing.
Critical Design	A detailed review of the element/segment-level design, including Review (CDR)such details as Program Design Language (PDL) for key software modules, and element interfaces associated with a release.
Demonstration	Observation of the functional operation of the verification item in a controlled environment to yield qualitative results without the use of elaborate instrumentation or special test equipment.
Incremental Design	Review conducted to evaluate segment designs associated with a Review (IDR) release.
Inspection	The visual, manual examination of the verification item and comparison to the applicable requirement or other compliance documentation, such as engineering drawings.
Scenario Group	A collection of scenarios that form one of the broadest functional subdivisions of the system.
Scenario	A functional subdivision of a Scenario Group which is designed and executed independently.
Sequence	A subdivision of a scenario which is designed to verify a number of functionally related requirements
Release Readiness	Conducted at the ECS system level for a GSFC Project Review Review (RRR) Team upon completion of release acceptance testing. The IATO leads the RRR to determine, with the GATT and the COTR, if the release is ready to be delivered, installed, and incorporated into the operational system.
Test	A procedure or action taken to determine under real or simulated conditions the capabilities, limitations, characteristics, effectiveness, reliability, or suitability of a material device, system, or method.
Test Case	A relatively small grouping of requirements that form the building blocks of a sequence.
Test Procedure	A detailed, step-by-step test of a logically related group of requirements

This page intentionally left blank.