605-CD-003-001

EOSDIS Core System Project

Operations Scenario Document for the ECS Flight Operations Segment (FOS)

October 1995

Hughes Information Technology Corporation
Upper Marlboro, Maryland

Releases A and B Flight Operations Segment (FOS) Operations Scenarios

October 1995

Prepared Under Contract NAS5-60000
CDRL Item 113

APPROVED BY

Cal Moore /s/	10/2/95
Calvin Moore, FOS CCB Chairman EOSDIS Core System Project	Date

Hughes Information Technology Corporation
Upper Marlboro, Maryland

605-CD-003-001

This page intentionally left blank.

Preface

This document is a contract deliverable, intended as a final submittal, with an approval code 2. As such, it does not require formal Government approval, however, the Government reserves the right to request changes within 45 days of the initial submittal. Once approved, contractor changes to this document are handled in accordance with Class I and Class II change control requirements described in the EOS Configuration Management Plan, and changes to this document shall be made by document change notice (DCN) or by complete revision.

Any questions should be addressed to:

Data Management Office
The ECS Project Office
Hughes Information Technology Corporation
1616 McCormick Drive
Upper Marlboro, MD 20774-5372

This page intentionally left blank.

Abstract

This Operations Scenario Document(OSD) serves as the vehicle for the EOS Flight Operations Team(FOT) to convey their Operational Concepts for the Flight Operations System(FOS) software as Operations Scenarios. This document also specifies the formats of the displays provided by the FOS in support of the scenarios.

Keywords:

This page intentionally left blank.

Change Information Page

List of Effective Pages	
Page Number	**Issue**
Title	Final
iii through viii	Final
1-1 an d 1-2	Final
2-1 and 2-2	Final
3-1 through 3-6	Final
4-1 through 4-4	Final
5-1 through 5-6	Final
6-1 and 6-2	Final
AB- through AB-4	Final

Document History			
Document Number	**Status/Issue**	**Publication Date**	**CCR Number**
605-CD-003-001	Final	October 1995	95-0700

This page intentionally left blank.

Contents

Preface

Abstract

Change Information Page

Contents

1. Introduction

1.1 Identification 1-1
1.2 Scope 1-1
1.3 Purpose 1-1
1.4 Status and Schedule 1-1
1.5 Document Organization 1-1

2. Related Documentation1

2.1 Parent Documents 2-1
2.2 Applicable Documents 2-1
2.3 Information Documents 2-1
2.3.1 Information Document Referenced 2-1

3. Scenario Descriptions

3.1 Spacecraft Clock Correlation 3-1
3.1.1 Description: 3-1
3.1.2 Use/How Often: 3-4

3.1.3 Assumptions / Pre-requisites 3-4
3.1.4 Detailed Description 3-4
3.1.5 Activity Phase Tools & Reports Summary 3-9
3.2 High Gain Antenna Pointing Operation 3-11
3.2.1 Description 3-11
3.2.2 Use/How Often 3-13
3.2.3 Assumptions / Pre-requisites 3-13
3.2.4 Detailed Description 3-13
3.3 EOC Off-line Telemetry Analysis Operations 3-21
3.3.1 Description 3-21
3.3.2 Use/How Often 3-21
3.3 Scenario Detailed Description 3-26
3.4 Activity Definition Configuration Management Scenario 3-32
3.4.1 Description 3-32
3.4.2 Use/How Often 3-36
3.4.3 Assumptions/Pre-requisites 3-36
3.5 Configuration Management of Command Procedures Scenario 3-40
3.5.1 Description 3-40
3.5.2 Use/How Often 3-44
3.5.3 Assumptions / Pre-requisites 3-44
3.5.4 Detailed Description 3-44
3.5.5 Activity Phase Tools & Reports Summary 3-48
3.6 FDF Command Load Uplink Scenario 3-50
3.6.1 Description 3-50
3.6.2 Use/How Often 3-54
3.6.3 Assumptions / Pre-requisites 3-54
3.6.4 Detailed Description 3-54
3.7 Configuration Management Pages/Rooms Scenario 3-56
3.7.1 Description 3-56
3.7.2 Use/How Often 3-60
3.7.3 Assumptions / Pre-requisites 3-60
3.7.4 Detailed Description 3-60
3.7.5 Activity Phase Tools & Reports Summary 3-63

3.8 SSR Playback Management Scenario 3-64
3.8.1 Description 3-64
3.8.2 Use/How Often 3-68
3.8.3 Assumptions / Pre-requisites 3-68
3.8.4 Detailed Description 3-68
3.8.5 Activity Phase Tools & Reports Summary 3-73
3.9 Spacecraft Activity Log Management Scenario 3-75
3.9.1 Description 3-75
3.9.2 Use/How Often 3-79
3.9.3 Assumptions/Pre-requisites 3-79
3.9.4 Detailed Description 3-79
3.9.5 Activity Phase Tools & Reports Summary 3-81
3.10 Configuration Management Relative Time Command Sequence (RTCS) Scenario 3-83
3.10.1 Description 3-83
3.10.2 Use/How Often 3-87
3.10.3 Assumptions / Pre-requisites 3-87
3.10.4 Detailed Description 3-87
3.10.5 Activity Phase Tools & Reports Summary 3-90
3.11 Real-Time Operations 3-92
3.11.1 Description 3-92
3.11.2 Use/How Often 3-96
3.11.3 Assumptions/Pre-requisites 3-96
3.11.4 Detailed Description 3-96
3.11.5 Activity Phase Tools & Reports Summary 3-102
3.12 Planning and Scheduling Scenario 3-103
3.12.1 Description 3-103
3.12.2 Use/How Often 3-107
3.12.3 Assumptions / Pre-requisites 3-107
3.12.4 Detailed Description 3-107

Appendix A. FUI Screen Descriptions

Appendix B. P&S Screen Descriptions

Abbreviations and Acronyms

This page intentionally left blank.

1. Introduction

1.1 Identification

The Operations Scenario Document(OSD) for the Earth Observing System (EOS) AM-1 Flight Operations Segment(FOS) Maintenance and Operations(M&O) Portion of the ECS, Contract Data Requirement List (CDRL) item 113, whose requirements are specified in the Data Item Description (DID) 605/OP2, is a required deliverable under the Earth Observing System Data and Information System (EOSDIS) Core System (ECS), Contract (NAS5-60000).

1.2 Scope

This Operations Scenario Document conveys to the FOS development organization the EOS FOT's operations concepts for the FOS software, and display formats the software will provide. This software is used by the EOS FOT to perform mission planning, spacecraft commanding and telemetry processing, and subsystem engineering analysis for the AM-1 mission spacecraft.

This document reflects the August 23, 1995 Technical Baseline maintained by the contractor configuration control board in accordance with ECS Technical Direction No. 11, dated December 6, 1994.

1.3 Purpose

The EOS AM-1 OSD conveys to the FOS development the FOT's preferences for the functionality provided by the FOS software to support the EOS AM-1 mission. The OSD also specifies the display formats the User Interface will provide.

1.4 Status and Schedule

This Operations Scenario Document contains a representative sample of the possible operations scenarios that could be formulated to describe the FOT-to-FOS software relationship. The scenarios included in this document were identified jointly by the FOT and the FOS developers as those having the highest priority in providing to the developers the desires of the FOT for the functional behavior of the FOS software and or the FOT's interpretation of FOS level 4 requirements.

This OSD is planned as a final delivery at CDR. The FOT and FOS recognize its importance in the team relationship between the FOT and the FOS. Additional scenarios will be added to this document as the need arises to clarify the intended use of FOS software or to aid the detailed software design process when several choices of design are evident, and a selection of which design best maps to the needs of the FOT, is desired by the developers.

1.5 Document Organization

This document is organized into three sections plus appendices. Section 2.0 contains information about documentation relevant the this OSD, including parent, applicable, and information documents.

Section 3.0 contains the operations scenarios. Each scenario contains a brief description, a high level data flow diagram(DFD), a flow graph or flow chart showing the detailed steps of the scenario, and a detailed description of each step of the scenario. The steps of the scenario in the flow graph or flow chart are numbered to match the detailed descriptions. Included is a sub-section on the use of the scenario and any assumption made. Within each detailed step of the scenario is a description of the scenario step and a listing of the tools used and reports generated.

This page intentionally left blank.

2. Related Documentation

2.1 Parent Documents

The parent documents are the documents from which this Operations Scenario document's scope and content are derived.

304-CD-001-002	Flight Operations Segment (FOS) Requirements Specification for the ECS Project, Volume 1: General Requirements
304-CD-004-002	Flight Operations Segment (FOS) Requirements Specification for the ECS Project, Volume 2: Mission Specific

2.2 Applicable Documents

The following documents are referenced within this Operations Scenario Document or are directly applicable, or contain policies or other directive matters that are binding upon the content of this volume.

None

2.3 Information Documents

2.3.1 Information Document Referenced

The following documents are reference material from which the authors derived information applicable to this Operations Scenario Document. These documents are not binding on the content of this Operations Scenario Document.

604-CD-001-004	Operations Concept for the ECS Project: Part 1-- ECS Overview, 6/95
604-CD-002-001	Operations Concept for the ECS project: Part 2B -- ECS Release B, Annotated Outline, 3/95
604-CD-003-001	ECS Operations Concept for the ECS Project: Part 2A -- ECS Release A, Final, 7/95

This page intentionally left blank.

3. Scenario Descriptions

3.1 Spacecraft Clock Correlation

3.1.1 Description:

This scenario will be used to update the AM-1 spacecraft clock. The Flight Operations Team (FOT) is responsible for: managing the spacecraft clock; keeping track of how much the spacecraft clock has drifted. The spacecraft clock is an oscillator which drifts in frequency over time. The clock will be maintained within ±100 microseconds of UTC. Spacecraft clock values are used for spacecraft position and attitude calculations, antenna and instrument pointing references, and stored command execution.

Figure 3.1.1-1 is a Clock Correlation Data Flow Diagram that identifies the Flight Operations Team's role within the ECS Operations Center(EOC). Also, shown are external elements and the major data flows between the EOC and these elements.

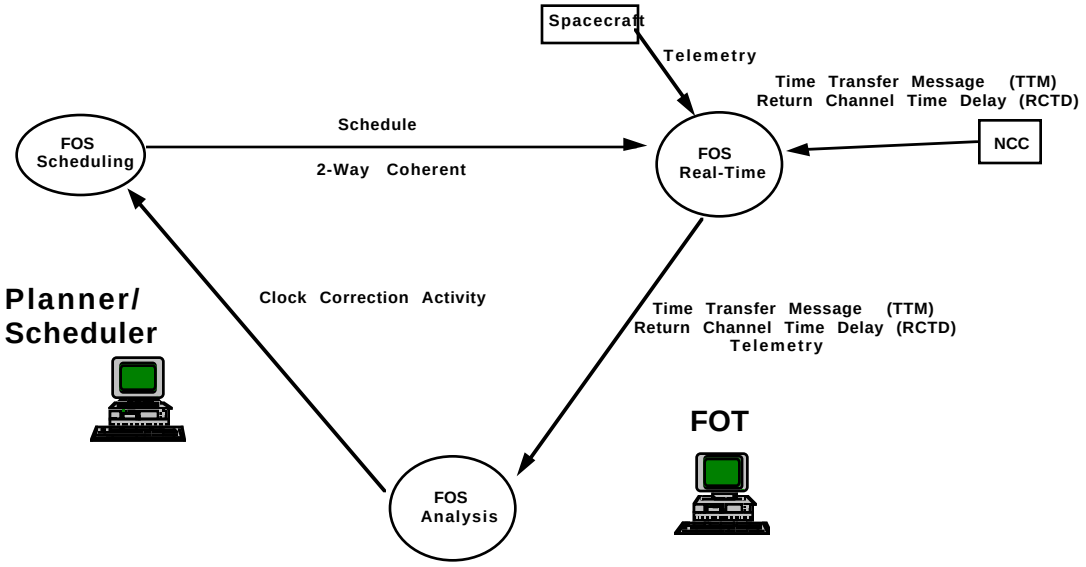

Figure 3.1.1-1. Clock Correlation Data Flow

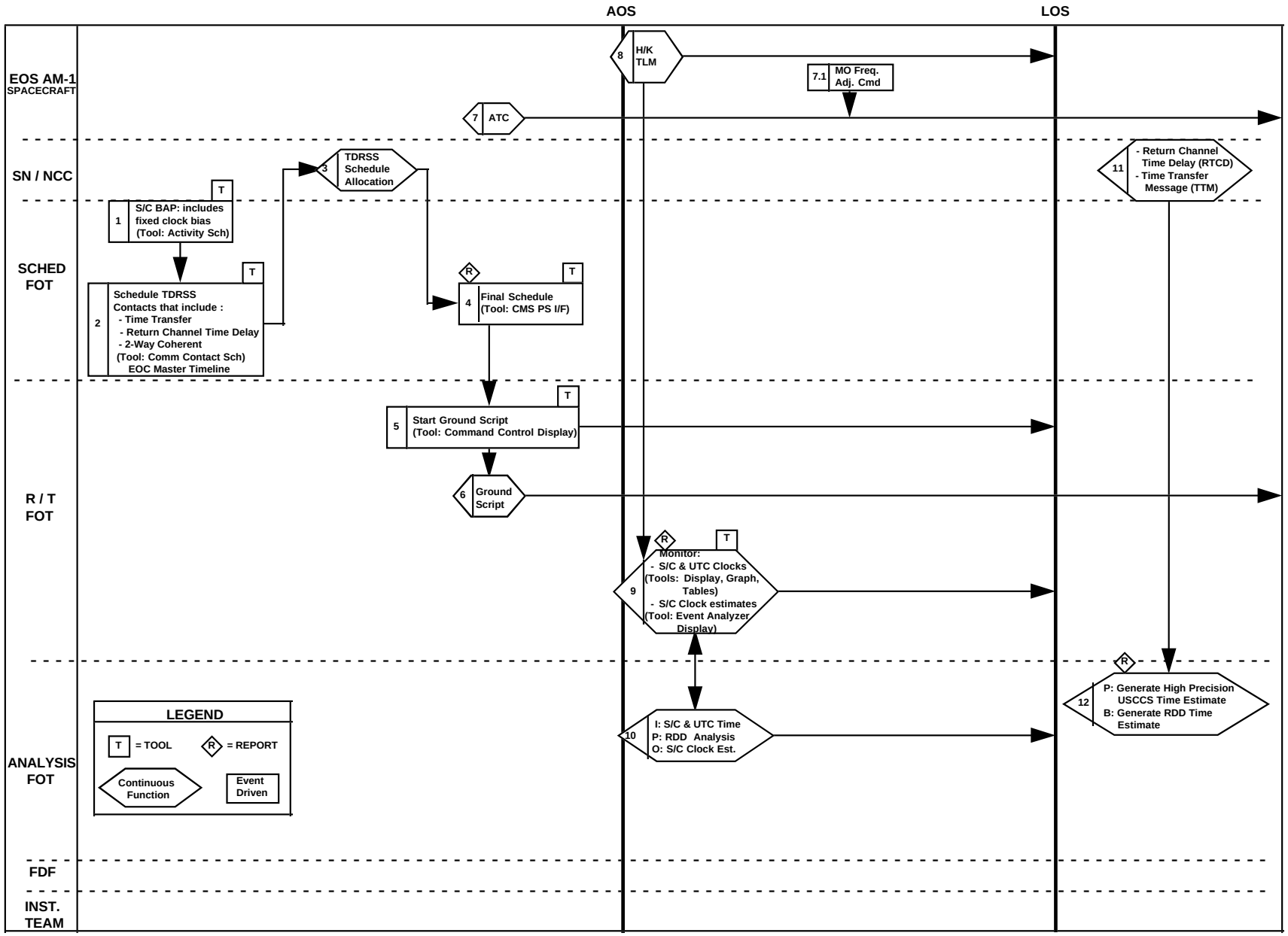

Figure 3.1.1-2. Clock Correlation Normal Operations Flow Chart

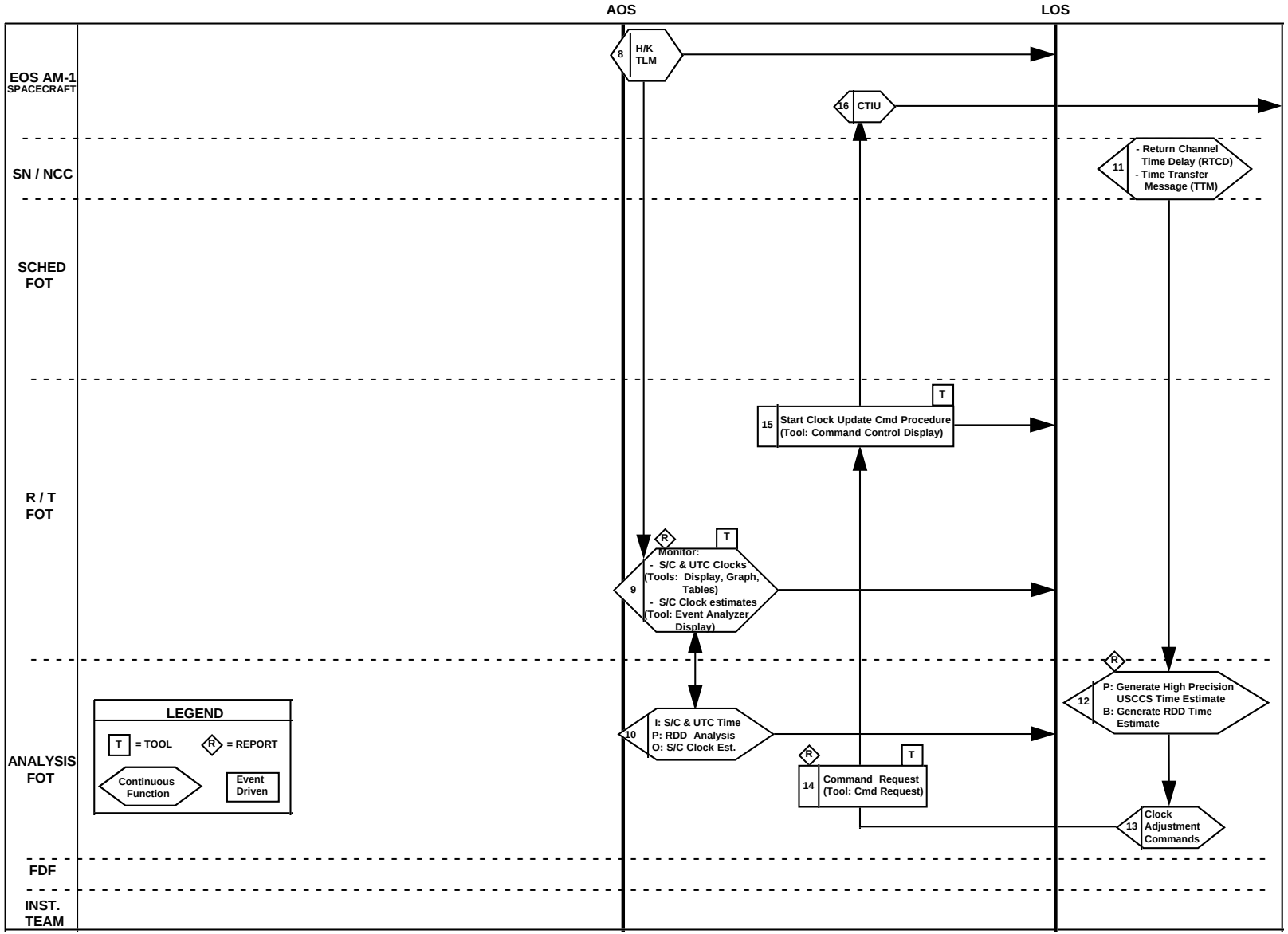

Figure 3.1.1-3. Clock Correlation Early Orbit Operations Flow Chart

Figure 3.1.1-2 is a Clock Correlation Flow Chart. It shows a Normal Operations flow. Figure 3.1.1-3 is a Clock Correlation Flow Chart. It shows an Early Orbit Operations flow.

3.1.2 Use/How Often:

- Early Orbit: Daily
  - Until correct clock bias is determined.
- Normal Operations: Weekly (Probably)
  - Depends on stability (Drift Rate) of the oscillator (Spacecraft Clock).

3.1.3 Assumptions / Pre-requisites

Analysis software is running all the time.

3.1.4 Detailed Description

Step 1: Prepare Baseline Activity Profile for Clock Adjustment

This step will be used for Normal Operations. A Clock Bias Activity which includes a fixed clock bias will be created. The Activity will be tied to a weekly (probably) event. Therefore, on a weekly basis the Clock Bias Activity will be part of the Spacecraft Baseline Activity Profile (BAP). The fixed clock bias will be determined by:

- Observing Clock (Master Oscillator, MO) Drift Rate.
- Examining Analysis Reports:
- USCCS spacecraft clock correlation report
- RDD spacecraft clock correlation report.
- Trending Analysis Data/Graphs.

Tool:

ACTIVITY SCHEDULER

- Select BAP
- Enter Schedule Start Time
- Enter Schedule Stop Time
- Press SCHEDULE

Step 2: Schedule TDRSS Contacts

The Planning and Scheduling system prepares TDRSS schedule requests that include:

- a coherent 2-way tracking service with the “Time Transfer” option selected.
- The Return Channel Time Delay Data option is selected in the TDRSS return link service.

Tool:

COMMUNICATION CONTACT SCHEDULER

- Enter Schedule Start Time
- Enter Schedule Stop Time
- Press SCHEDULE

EOC MASTER TIMELINE

- View Contacts

Step 3: Allocate TDRSS Contacts

The NCC provides the AM-1 TDRSS schedules to the EOC.

Step 4: Schedule Clock Adjust Activity

FOT Planner/Scheduler will enter Detailed Activity Schedule (DAS) Start Time and DAS Stop Time. This will initiate the generation of the DAS and Ground Script. The FOT will verify that the DAS includes the Clock Update Activity. The FOT will verify that the Clock Update Command Procedure is contained in the:

- Ground Script: Early Orbit
- ATC Load: Normal Operations

Tool:

CMS PS INTERFACE

Enter DAS Start Time

- Press RELEASE
- Generate DAS
- Generate ATC Load
- Generate Ground Script

Report:

Detailed Activity Schedule Report

- Clock Update Activity

Ground Script Report, Early Orbit

- Clock Update Command Procedure

ATC Report, Normal Operations

- Clock Update Command

Step 5: Manage Ground Script via Command Control Window

The FOT Command Activity Controller (CAC) will start the appropriate Ground Script using the Command Control Display window. The Command Control Display window will remain up for the entire support (CAC Workstation).

Tool:

COMMAND CONTROL Display

- Select Script Name
- Press USE

Step 6: Execute Ground Script

The Active Ground Script will run to completion. The Active Ground Script contains the Clock Update Command Procedure. This Procedure contains the Cock Bias Command. The Ground Script Method for updating the clock will be used during early orbit. During Normal Operations the Clock Bias Command will be placed in the ATC load.

Step 7: Implement Master Oscillator Adjust Command in ATC Load

Normal Ops: The Absolute Time Command (ATC) will contain the Clock Update Command during Normal Operations. The command will be scheduled to execute during a real-time support. This will allow the FOT to verify command execution.

Step 7.1: Apply Master Oscillator Frequency Adjust Command

Automatic, Normal Ops: Scheduled to occur during a real-time support. A Stored Master Oscillator (MO) Frequency Adjust Command will be sent to the Command & Telemetry Interface Unit (CTIU). The CTIU will then transfer the command to the MO Bus Data Unit (BDU).

Step 8: Spacecraft Produces Time Tagged Telemetry

Automatic: Spacecraft telemetry will contain the spacecraft clock. White Sands will insert the ground receipt time (UTC) into the EDOS Data Unit (EDU).

Step 9: Monitor Real-time Telemetry

Automatic & Manual: The FOT (Spacecraft Evaluator & Command Activity Controller) will monitor the Spacecraft Clock Drift. This will be accomplished by evaluating the pre-defined clock display, graph, table and the Event History Display. Necessary print-outs will be generated and filed.

Tool:

PAGE Display

- Call up Clock Display
- Observe S/C Time
- Observe UTC (Ground Time)
- Send Hard copy to Printer

GRAPH Display

- Call up Clock Graph
- Observe Clock Drift (error) Rate, ±100 ms
- Observe Frequency (Nominal, 4 Mhz)
- End of Support, Send Hard copy to Printer

TABLE Display

- Call up Clock Table (Spreadsheet)
- Columns: S/C Time, UTC Time, Clock Drift Rate
- End of Support, Send Hard copy to Printer every time update clock.

Event History Display

- Every Minute observer the average S/C Clock delta (error) value (RDD Method).
- Value: ±100 microsends

Report:

Clock Display

- S/C Time
- UTC (Ground Time)

Clock Graph

- Clock Drift (error) Rate, ±100 ms
- Frequency (Nominal, 4 Mhz)

Clock Table

- Columns: S/C Time, UTC Time, Clock Drift Rate

Step 10: Compute Return Data Delay Time Estimate

Automatic: The analysis system continuously gathers the Spacecraft Time and Ground Time (UTC) during the real-time support. Once per minute the Return Data Delay (RDD) Clock Correlation Algorithm uses this data to calculate the difference between the spacecraft time and ground time. This difference is reported to the FOT via Event Message.

Step 11: Obtain Time Transfer Message

Automatic: Post Pass, The NCC sends the analysis system the Time Transfer Message (TTM) and the Return Channel Time Delay Message (RCTD).

Step 12: Compute User Spacecraft Clock Calibration System (USCCS) Time Estimate

Automatic: Post-Pass, the Analysis System initiates USCCS and RDD computation:

- Gathers the Time Transfer Message, the Return Channel Time Delay Message and AM-1 packet telemetry collected during the time period that the Clock Correlation data was scheduled to be collected
- Clock correlation algorithm uses these data to calculate the difference between the spacecraft time and the ground time UTC
- Reports are generated for the FOT (short term and long term trending)
- Standing Orders used to trend graphs of spacecraft clock update parameters.

The Analysis system will estimate the spacecraft clock error using two methods.

1) PRIME - USCCS

   The USCCS algorithm uses TDRSS PN ranging epochs. By measuring the times a PN range epoch left the WSGT and then returned, the time that the PN pulse arrived at the spacecraft can be determined. When the PN range epoch pulse arrived at the spacecraft, the spacecraft clock value is encoded into the downlink telemetry stream. This value is extracted by the analysis system and, after correction for numerous constant equipment delays, is compared with the time the PN pulse arrived at the spacecraft. The difference in this comparison is the spacecraft clock error, which is used to correct the spacecraft clock. The USCCS method is available only during coherent two-way tracking SN service. In addition, the USCCS method will perform calculations only after the service termination.

2) BACKUP - Return Data Delay (RDD)

   The RDD method for calibrating the spacecraft clock with the UTC will be used in addition to the USCCS method. The RDD method uses ground receipt time, spacecraft time, numerous data base defined delays, and predicted spacecraft range data to calculate the clock error. This method is available during real-time processing of telemetry, but at reduced accuracy when compared with the USCCS method. During GN, DSN, and non coherent SN support, only the RDD method may be used.

Report:

USCCS spacecraft clock correlation report

- Ground & S/C Time Difference
- Master Oscillator Frequency Bias
- Master Oscillator Drift

RDD spacecraft clock correlation report

- Ground & S/C Time Difference
- Master Oscillator Frequency Bias
- Master Oscillator Drift

Step 13: Compose Clock Adjustment Commands

Automatic, Early Orbit: Use primarily during Early Orbit. The Clock Adjustment Command will be used on an upcoming real-time support. It will contain the calculated clock bias (update).

Step 14: Access Command Request

Manual, Early Orbit: Use primarily during Early Orbit. During this step a Command Request will be generated. The Command Request will contain the Clock Update Command Procedure and the Clock Bias as an input parameter. The Command Request will be used on an upcoming real-time support.

Tool:

COMMAND REQUEST

- Enter Clock Update Command Procedure Name
- Supply Clock Bias Parameter (obtained from Analysis)

Report:

Command Request

- Hardcopy or Electronic
- Clock Update Command Procedure
- Input parameter: Clock Bias

Step 15: Start Clock Update Procedure

Manual, Early Orbit: During an upcoming support, the FOT's CAC will use the Command Control Display window to input the Clock Update Command Procedure on the Command Line. The Clock Bias input parameter will be given to the CAC during the Command Request, Step 13. The Spacecraft Evaluator will examined the directive and OK its integrity. Once this is done, the CAC can start the Clock Update Command Procedure.

Tool:

COMMAND CONTROL Display

- Start Clock Update Command Procedure
  - Contains Master Oscillator Adjust Frequency.

Step 16: CTIU Interface

Automatic, Early Orbit: During a real-time support the Command & Telemetry Interface Unit (CTIU) will receive the Master Oscillator (MO) Frequency Adjust Command and send it to the MO Bus Data Unit (BDU).

3.1.5 Activity Phase Tools & Reports Summary

The following list is a summary of the FOS provided tools and reports identified in this scenario:

a. Scheduler

1. Tools
    (a) Activity Scheduler
    (b) Communication Contact Scheduler
    (c) EOC Master Timeline
    (d) CMS PS Interface
2. Reports
    (a) Detailed Activity Schedule Report
    (b) Ground Script Report
    (c) ATC Report

b. Real-Time
1. Tools
    (a) Command Control Display
    (b) Page Display Builder
    (c) Graph Builder
    (d) Table Builder
    (e) Event History Display
2. Reports
    (a) Hard Copies: Displays, Graphs, Tables

c. Analysis
1. Tools
    (a) Routine Analysis Scenario
2. Reports
    (a) User Spacecraft Clock Calibration System (USCCS) spacecraft clock correlation report.
    (b) Return Data Delay (RDD) spacecraft clock correlation report.
    (c) Command Request

3.2 High Gain Antenna Pointing Operation

3.2.1 Description

This scenario describes High Gain Antenna (HGA) Pointing Operations. The HGA is the primary antenna on the AM-1 spacecraft for communicating with the Tracking and Data Relay Satellite System (TDRSS). Specifically it is used for the high rate S-Band and K-band data transmissions. The Flight Operations Team (FOT) Schedulers will use the FOS Planning, Scheduling, and Command Management software to prepare the commands necessary to point the HGA to the appropriate TDRS.

Figure 3.2.1-1 is a High Gain Antenna Processing Data Flow Diagram that identifies the Flight Operations Team role within the FOS. Also shown are external EOSDIS elements and the major data flows within the FOS and among these elements. Figure 3.2.1-2 is a High Gain Antenna Pointing Flow Chart. It shows the activities that occur before Acquisition Of Signal (AOS) during a Support (S/C Contact) and after Loss Of Signal LOS).

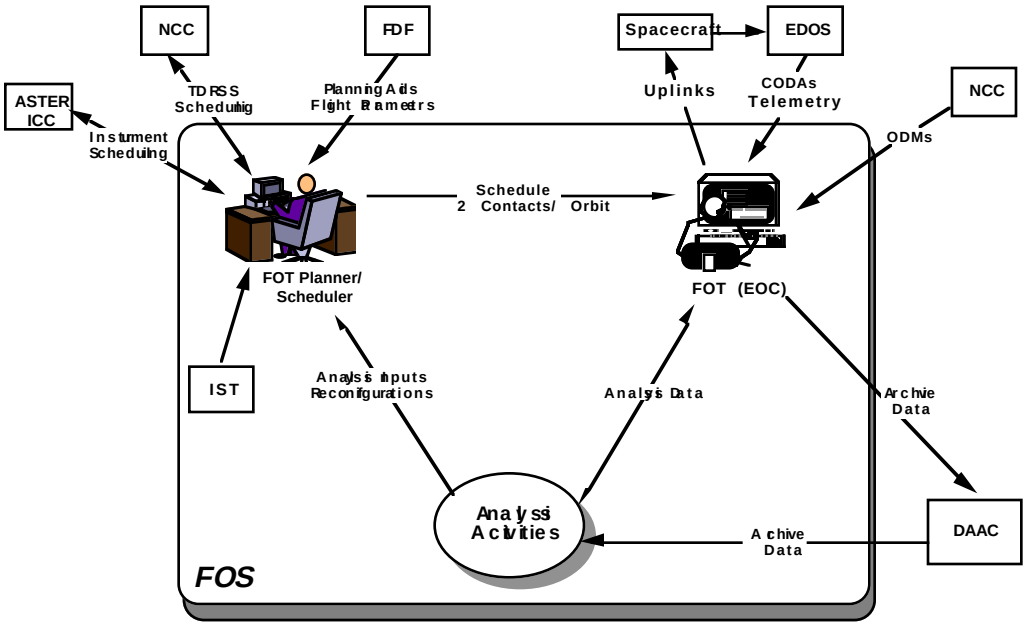

Figure 3.2.1-1. High Gain Antenna Processing

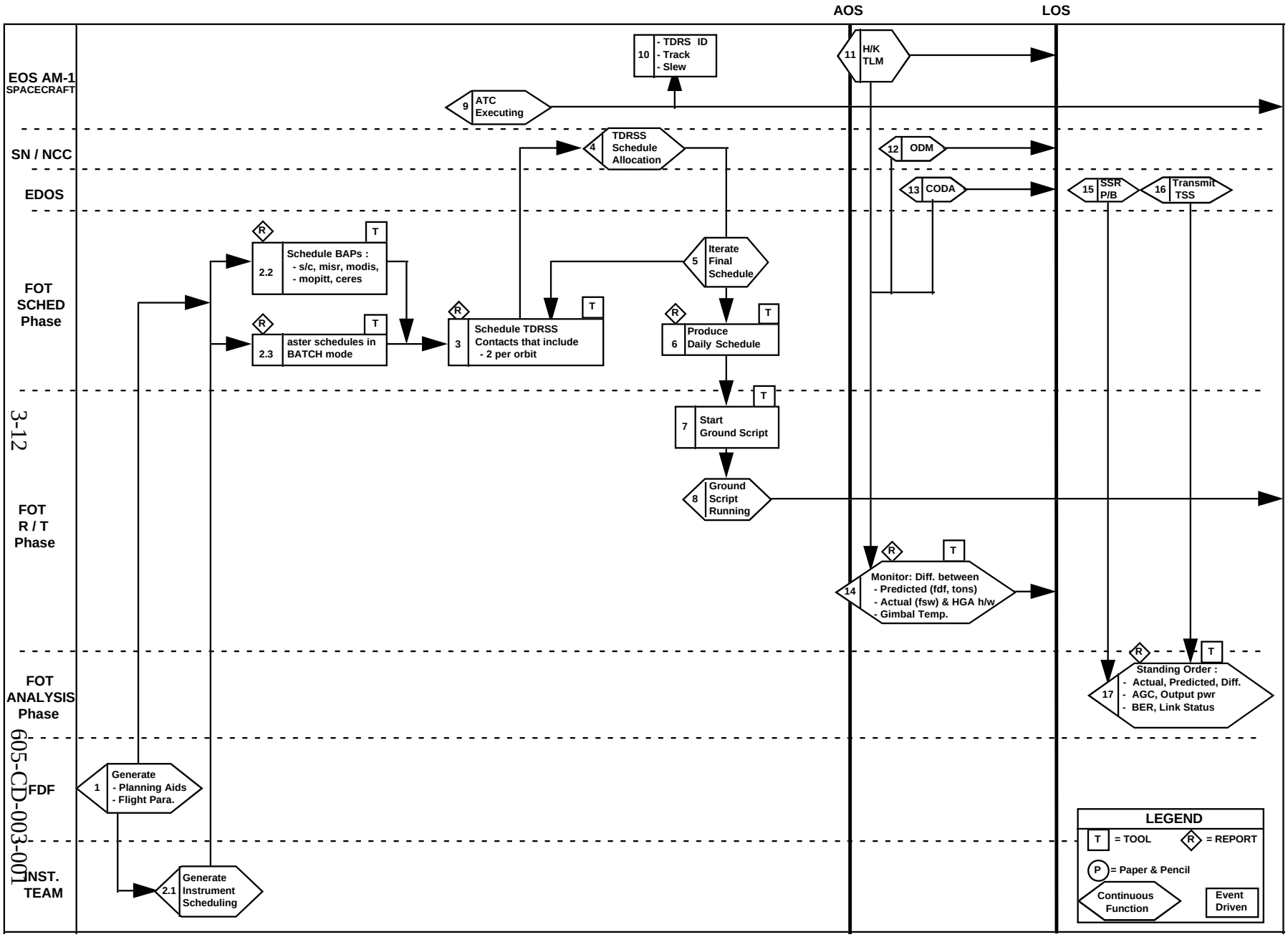

Figure 3.2.1-2. High Gain Antenna Pointing Operation

The FOT will generate a TDRS position (TDRS Ephemeris) table load and uplink it to the S/C on a daily basis. The TDRS On-board Navigation System (TONS) flight software will automatically generate the EOS AM-1 position (Spacecraft Ephemeris). The TDRS & Spacecraft Ephemerides will be used by the Attitude Determination and Control (ADAC) Flight Software to Point the HGA to the selected TDRS(Azimuth & Elevation Step Commands).

Spacecraft Table creation, validation and load generation will be covered in another scenario. The focus of this scenario is real-time monitoring and daily trending of the difference between the predicted and actual HGA position data.

3.2.2 Use/How Often

The FOT Schedulers will create an Absolute Time Command(ATC) Table that contains the TDRS antenna selection and transmitter configuration for each scheduled real-time contact, daily. Also, associated TDRS Ephemeris Tables and Backup S/C Ephemeris Tables are created. The FOT Schedulers will validate and covert these tables to an uplinkable format (load generate). The Command Activity Controller will uplink the ATC and Ephemeris Table Loads every day.

3.2.3 Assumptions / Pre-requisites

- Previous day ATC has been loaded and is currently executing.
- Previous day Spacecraft & TDRS Ephemeris Tables were loaded.

3.2.4 Detailed Description

This section provides a step-by-step description of the High Gain Antenna Pointing Operation as presented in Fig. 3.2-2.

Step 1: Generate Planning Aids & Flight Parameter

FDF software resident in the EOC will provide the following data:

- TDRS (Prime) and Spacecraft (Backup) Ephemeris.
- Orbital Events.
- TDRSS contact availability periods, (UAV)
- Predicted Site Acquisition Tables (PSAT)
- UTC to UT1 conversion coefficients
- Field of View(FOV) to celestial body visibility.

The generation of planning aids and Flight parameters will be an automatic step. FOT involvement in the generation of FDF products will be covered in the Generation Of FDF Products scenario.

Step 2.1: Generate Instrument Scheduling

The Principal Investigators (PI) and Team Leads (TL) have direct input into the planning and scheduling of their instruments. This step covers from 28 days to 7 days prior to the target day, Initial scheduling includes:

- Adding Instrument activities to mission schedule
- Scheduling Baseline Activity Profiles (BAP's)
- Batch scheduling
- Generating TDRSS contact requests

This step is automatic as far as the FOT is concerned.

(Note: FOT will act as a mediator to help resolve initial spacecraft and/or instrument conflicts).

Step 2.2: Schedule BAPs For Spacecraft, MISR, MODIS, MOPITT and CERES

The FOT Planner/Scheduler will use Baseline Activity Profiles (BAP) scheduling for CERES, MODIS, MOPITT, MISR and the Spacecraft. The Operating modes of the instruments and their respective data rates into the SSR are drivers for determining TDRSS contact needs.

Tool:

BAP Definer

- Enter BAP Name
- Enter Resource Name
- List Activities
- Press OK

Report:

Activity Schedule Report

- Event
- Activity Name

Step 2.3: ASTER Schedules in Batch Mode

The FOT Planner/Scheduler will use Batch scheduling for ASTER. ASTER will use Batch for both Resource Profiles and Activities. The Operating mode of ASTER and its respective data rate into the SSR is a driver for determining TDRSS contact needs.

Tool:

Batch Definer

- Enter Activity List Electronically
- Resource Name is ASTER
- Press OK

Report:

ASTER Schedule Report

- Event

- Activity Name

Step 3: Schedule 2 TDRSS Contacts Per Orbit

The FOT Planner/Scheduler prepares and submits TDRSS schedule requests. Scheduling algorithm computes desired TDRSS contacts:

- Select from TDRSS visibility periods supplied by FDF
- Based upon two 10 minute TDRSS contacts per orbit
- Function of data volume requirements on SSR buffers
- Constrained by High Gain Antenna slew rates
- Track & Stop HGA to prevent Gimbal motor overheating.

Tools:

Communication Contact Scheduler

- Enter Schedule Start Time
- Enter Schedule Stop Time
- Press SCHEDULE

EOC Master Timeline

- View Contacts

Report:

Detailed Activity Schedule Report

- Ephemeris Table Loads
- HGA Commands

Step 4: TDRSS Schedule Allocation

The NCC provides the AM-1 TDRSS schedules to the EOC.

Step 5: Iterate Final Schedule

The actual TDRSS contacts are reflected on the mission plan once received from NCC. The FOT Planner/Scheduler resolves any conflicts and submits additional TDRSS contact requests to the NCC.

Step 6: Produce Daily Absolute Time Command Load and Ground Script

The FOT Scheduler will enter the desired Detailed Activity Schedule (DAS) Start Time and DAS Stop Time. This will initiate the generation of the DAS, Ground Script and Absolute Time Command(ATC) load. The FOT will verify that the DAS and Ground Script contain the TDRS and Spacecraft Ephemeris Table Uplink Loads. The respective TDRS and Spacecraft ephemeris loads have been automatically generated by CMS. The FOT will verify that all load file names are correct. The FOT will also verify that the ATC load contains as a minimum:

- Pre-Contact Commands: TDRSS ID, SLEW, TRACK and TRANSMITTER ON.
- Post-Contact Command: TRANSMITTER OFF.

Tool:

CMS PS Interface

- Enter DAS Start Time and Stop Time
- Press Release
- Generate DAS
- Generate ATC Load
- Generate Ground Script

Table Load Builder

- FDF Table
- Table Number
- File Name
- Generate Table Load

Report:

Detailed Activity Schedule Report

- Ephemeris Table Loads
- HGA Commands

Ground Script Report

- Ephemeris Table Loads

ATC Report

- TDRSS ID, SLEW, TRACK, TRANSMITTER ON & OFF

Step 7: Start Ground Script

The FOT Command Activity Controller (CAC) will start the appropriate Ground Script using the Command Control Display window. The Command Control Display window will remain up for the entire support (CAC User Station).

Tool:

Command Control Display

- Select Script Name
- Press USE

Step 8: Ground Script Running

The Active Ground Script will run to completion. The Active Ground Script will contain the TDRS and Spacecraft Ephemeris Table Load Command Procedures.

Step 9: ATC Executing

The ATC will prepare the spacecraft for the upcoming support by slewing the High Gain Antenna to the appropriate azimuth and elevation angles. The Absolute Time Command (ATC) will contain the HGA pre-contact commands (TDRSS ID, SLEW and TRACK) for each support.

Step 10: TDRS ID, Tracking and Slew

The spacecraft is operating on the previously uplinked ATC command load. The ATC will issue the Pre-Contact commands: TDRSS ID, SLEW, TRACK.

Step 11: House Keeping Telemetry

Spacecraft telemetry will contain the following telemetry that the FOT will specifically monitor to observe HGA activity:

- Receiver Signal Strength
- Transmitter Output Power
- Receiver Lock
- Detector Lock
- HGA H/W Azimuth Position
- HGA H/W Elevation Position
- FSW Azimuth Pointing Angle
- FSW Elevation Pointing Angle
- HGA FSW: Mode (TRACK), TDRS ID
- Etc.

Step 12: NCC Operational Data Messages

The NCC will be sending Operational Data Messages(ODM)s to the EOC every 5 seconds during the support. The ODMs will be used to verify the Space Network performance and identify possible communications links anomalies related to HGA performance.

The ODMs will contain a minimum of :

- Bit Error Rate(BER)
- Link Status (LOCK / NO LOCK)
- TDRSS Ground Terminal(TGT) Transmitter Output Power
- TGT Receiver Signal Strength

- Etc.

The Data Management System (DMS) will archive all the ODM ground telemetry during the real-time contact. If there is a problem with the SN during the contact this data will be graphed post pass. Otherwise, the data will be graphed once per day as a standing order (Analysis).

Step 13: EDOS Customer Operations Data Accounting

EDOS will be sending Customer Operations Data Accounting(CODA)s packets to the EOC every 5 seconds during the TDRSS event. The CODAs will be used to verify the telemetry data quality at the EDOS interface. The CODAs will contain as a minimum:

- Statistics
- # of rejected Command Link Telemetry Units(CLTU)
- # of rejected EDOS Data Units(EDU)

The Data Management System (DMS) will archive all the CODAs during the real-time contact. If there is a problem with the data quality during the contact the CODA data will be plotted post pass along with the NCC ODMS, S/C telemetry, and FDF data. Otherwise, the data will be plotted once per day as a standing order (Analysis).

Step 14: Real-time Monitoring of Differences Between Predicted and Actual HGA Data Values

The FOT (Spacecraft Evaluator & Command Activity Controller) will monitor the HGA activity and TDRSS Link Status. This will include: Difference between the Predicted (FDF & TONS) and the Actual (FSW & HGA H/W) HGA values, everything in "Steps 11, 12 & 13". This will be accomplished by evaluating the pre-defined HGA display, graph, table and the Event History Display. Necessary print-outs will be generated and filed.

Tool:

Page Display

- Call up HGA Display
- Send Hard copy to Printer

Graph Display

- Call up HGA Graph
- End of Support, Send Hard copy to Printer

Table Display

- Call up HGA Table (Spreadsheet)
- End of Support, Send Hard copy to Printer

Event History Display

- Observe Command Failures
- Observe Forward Link Status
- Observe Return Link Status

Report:

Hard copy of HGA display page as required.

Step 15: Solid State Recorder Playback

Recorded S/C and instrument telemetry, played back to EDOS during the real-time contact will be utilized to analyze the short term and long term performance of the HGA.

Step 16: Transmit TDRS Service Summary - Post Pass

The NCC sends the TSS: TDRS Service Summary. The TSS contains data which summarizes the performance of the TDRSS Ground Terminal Automated Data Processing Equipment(ADPE) during the contact. This information may be used to resolve a communications anomaly involving the HGA.

Step 17: Offline HGA Analysis

The FOS will automatically trigger the submission of an routine Analysis request that processes the SSR Dump Data, TSS data, CODA data, ODMS, and FDF data to analyze the difference between the predicted HGA behavior and the actual HGA behavior, and the Radio Frequency(RF) link performance for each TDRSS contact..

Report:

HGA Plot

Link Status Plots

3.2.5 Activity Phase Tools & Reports Summary

The following list is a summary of the FOS provided tools and reports identified in this

scenario:

a. Scheduling
   1. Tools
      (a) Activity Scheduler
      (b) Communication Contact Scheduler
      (c) EOC Master Timeline
      (d) CMS PS Interface
      (e) Table Load Builder
   2. Reports

(a) Detailed Activity Schedule Report

(b) Ground Script Report

(c) ATC Report

(d) Table Report

b. Real-Time

1. Tools

(a) Command Control Display

(b) Page Display Builder

(c) Graph Builder

(d) Table Builder

(e) Event History Display

2. Reports

(a) Hard Copies: Displays, Graphs, Tables

c. Analysis

1. Tools

(a) Compare Today's Ephemeris with Yesterdays

(b) Standing Orders

2. Reports

(a) Ephemeris Comparison Report

(b) HGA Report

3.3 EOC Off-line Telemetry Analysis Operations

3.3.1 Description

This scenario describes EOC Off-line Telemetry Analysis Operations. This scenario depicts the use of the EOC Analysis software by the FOT for off-line in-depth analysis of the short term performance and long term trend behavior of the AM-1 Spacecraft(S/C) and Instrument payloads. The specific tools used and reports generated are called out in each step of the scenario.

3.3.2 Use/How Often

The basic use of the Analysis Software is to generate Graphs and Tables of the following data sources: S/C and Instrument telemetry, NCC Operational Data Messages(ODMS), Customer Operations Data Accounting(CODA) messages, and FDF planning aids. The Graphs and Table information will be used to validate AM-1 performance, identify anomalous conditions, log the consumption of consumables and the actuation of life-rated components, and display long term trends in component operating characteristics, changes to the orbit, and perturbations to the attitude. The capabilities of the trend system will be expanded by supporting the installation of user defined algorithms that compute pseudo-type derived telemetry, to be Graphed or Tabulated along with or instead of the S/C telemetry. The derived telemetry will be compared to the real telemetry under several forms of Data Reduction, described below in section 3.3.2.1, which should act to reduce the "analysis load" on the FOT.

The FOT will generate 4 routine Analysis Products:

- Orbital Graphs: Short duration graphs of approximately 100 - 200 S/C and Instrument mnemonics, FDF planning data, EDOS CODAs and NCC ODMS, and derived parameters. Orbital Graphs will be used by the FOT to view the S/C and Instrument performance during the back orbit, and the RF link and ground system performance for the previous real-time contact. These graphs will be generated automatically after the reception of each Solid State Recorder(SSR) playback by the Data Management System(DMS) from EDOS. FOS User Interface will provide a mechanism to modify the mnemonic list used of this Analysis Request.
- The Orbital Graphs will be analyzed by the On-line Evaluators between the real-time contacts as part of their routine responsibilities to detect anomalies and performance deviations from the norm. The On-line Evaluator will respond to the contents of the Orbital Graphs based on pre-defined instructions / procedures from the subsystem engineers, or when in doubt, contact the appropriate subsystem engineer for guidance.
- The subsystem engineers will also review the Orbital graphs each day as they are made available, advancing the On-line evaluator's analyses and supporting any ongoing investigations.
- Daily Graphs: 24 hour duration graphs of a large portion(2500 - 3000) of the S/C & Instrument mnemonic set, FDF planning data, derived parameters, NCC ODMS and EDOS CODAs, graphed versus time, orbit, angle and versus S/C telemetry. These Daily

Graphs will be used to analyze the performance of the S/C and Instrument h/w and s/w subsystems over a 24 hour period. The Daily Graphs will be generated automatically once per day by standing order after the reception of approximately 24 S/C hours of telemetry by the Data Management System(DMS) from EDOS.

- The Daily Graphs will be analyzed by the subsystem engineers as part of their routine responsibilities to detect anomalous or irregular performance. The contents of the Daily Graphs will be compared to previous graphs for differences, as one form of analysis. Detection of anomalous performance will result in the initiation of an Anomaly investigation, and additional graphing of the mnemonics of interest at higher levels of resolution.
- Long Term Trend Graphs: Graphs of accumulating S/C, Instrument, derived, and FDF statistical information that show seasonal changes, low rate degradation in component performance, the rate of consumption of consumables and life rated components, and degradation changes to the AM-1 orbit and attitude. These graphs are used by the FOT, in addition to the Orbital and Daily graphs, to identify anomalous trends and to assess the impact of subsystem operation changes or refinements. These graphs will be generated automatically via standing order, usually once per week during normal operation, and as often as once per day during the post launch In-Orbit Checkout(IOC) period or during anomaly investigations. The Long Term trend Graphs form the basis of the overall S/C, Instrument, and Orbit status representations that will be presented to the customer in a weekly report. Figure 3.3-1 is a prototype of the type of trend graph needed by the FOT. Fields of interest on this graph are:
    - x's denote data samples.
    - Solid line is a linear least squares curve fit of the data samples.
    - Curve fit equation.
    - Upper and lower limit dotted lines and values(database or user supplied).
    - Estimate of limit crossing date and time.
    - User selected time span for X axis.
    - Title of Graph
    - Etc.

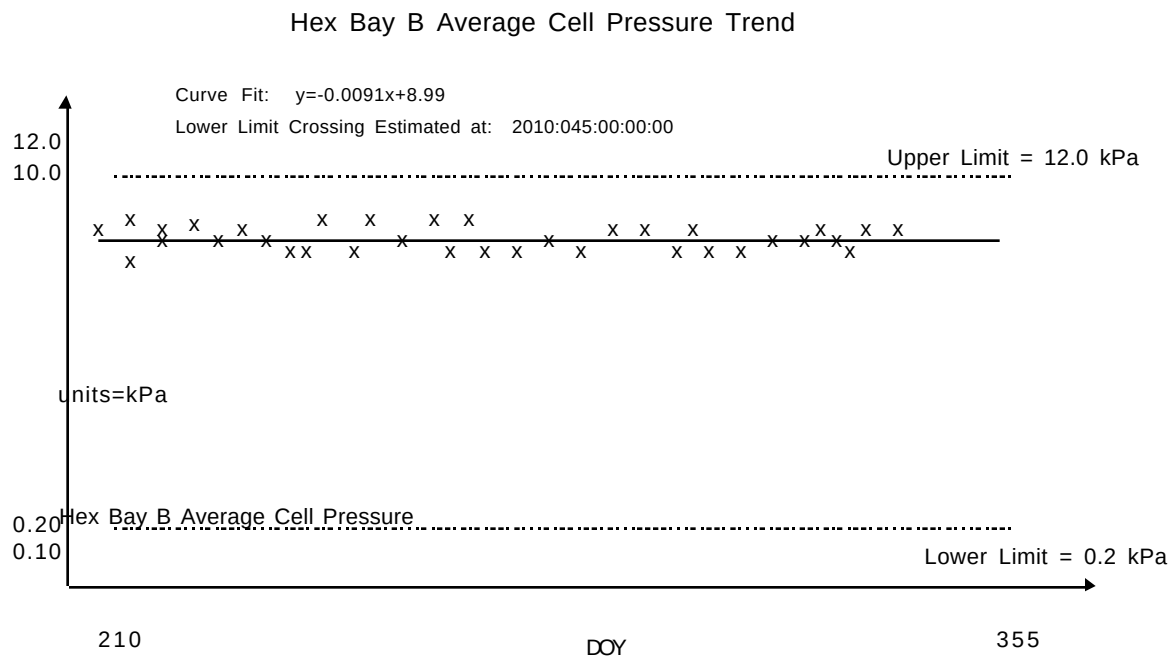

Figure 3.3-1. Long Term Trend Graph Example.

- Consumable Usage Tabulation: A table or report reflecting the usage of consumable resources and life rated components. This product will show the either the hours used and the number of cycles executed or the amount of a resource expended, such as kilograms of fuel or the reduction in pressure of a refrigerant. Rates of consumption will be provided as appropriate for each component.

3.3.2.1 Data Reduction

The FOT will implement data reduction methods to reduce the Analysis "load" on the subsystem engineers. Various reduction techniques will include:

- Sampling every nth occurrence of a telemetry point: for thinning constant high rate telemetry, providing a higher level picture of the behavior of the specific point.
- Averaging the telemetry over a user specified period: 1) thinning irregular or dynamic high data rate telemetry, providing a higher level picture of the specific point; 2) combining several telemetry points from a subsystem component to gain a high level view into the behavior of that component.
- Statistical Reduction: Minimum, Maximum, Mean(Arithmetic and Root), Standard Deviation, and Variance functions that could be used to abstract important information from telemetry.

- Predicted vs. Actual Delta - Algorithms: Algorithms would be incorporated into the Analysis system to compute(from FDF data mostly) predicted component performance or behavior. The predicted telemetry would differenced with the actual telemetry to produce a delta value which would be graphed or tabulated. The intent is to reduce complicated graphs of component behavior, such as proper pointing of the High Gain Antenna(HGA) to a simple, easy to interpret graph of points about or near zero. Figure 3.3-2 shows an example of the use of Delta-Algorithms.

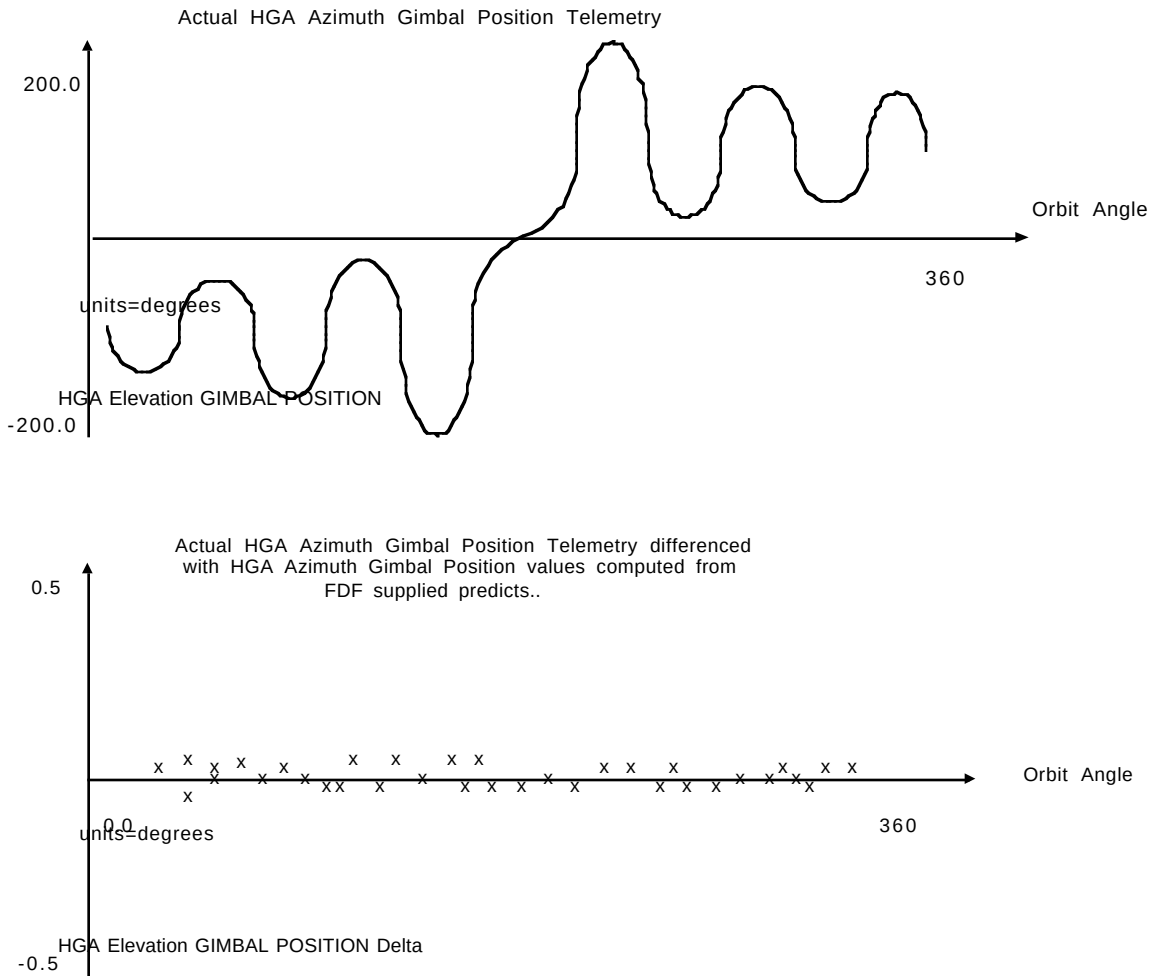

Figure 3.3-2. Delta-Algorithm Example.

- Derived Parameter Algorithms(Metrics) Algorithms designed to provide additional information about the spacecraft and its environment, not specifically provided by the spacecraft. These algorithms would compute values or metrics that could be analyzed and subsequently trended or tracked. Examples include: The angles between each star tracker boresight and the Sun and Moon, the angles between the Earth Sensor Assembly boresight

and the Sun and Moon, major cycle average of the Earth Sensor Assembly pitch and roll error signals corrected for theoretical altitude and earth oblateness effects, the Beginning of Day S/A potentiometer position in degrees, the accumulated thruster msecs for each translation thruster. Figure 3.3-3 shows the graph of the computed angle between the Sun and the ESA1 boresight.

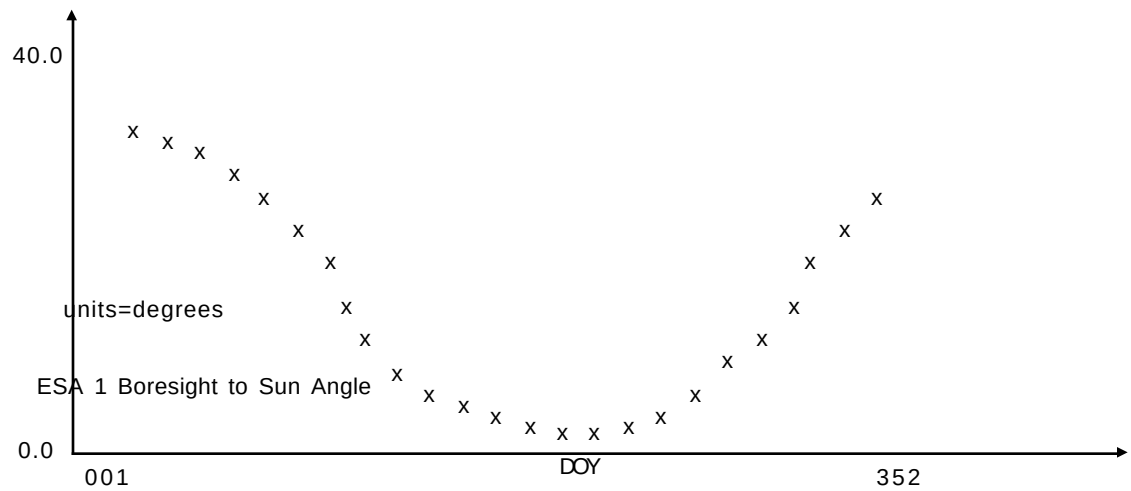

Figure 3.3-3. Derived Parameter Example

3.3.2.2 Signature Analysis

The FOT desires the implementation of Signature Analysis. Signature Analysis would be used to perform Telemetry Analysis in a way similar to that performed by the subsystem engineers. Signature Analysis would be based on statistical models of the S/C telemetry points, derived from the actual telemetry. Telemetry from the Spacecraft would be processed against these models. Deviations from the model behavior by a delta greater than a user specified value of the standard deviation would trigger an alarm and the automatic generation of graphs and tables of the model telemetry and the deviant telemetry. Figure 3.3-4 shows an example of signature analysis where the x's represent the statistical model and the solid line represents the telemetry being compared to the statistical model. In this example the spacecraft telemetry falls within the statistical model bounds. Figure 3.3-5 shows an example of when the telemetry falls outside of the statistical model bounds.

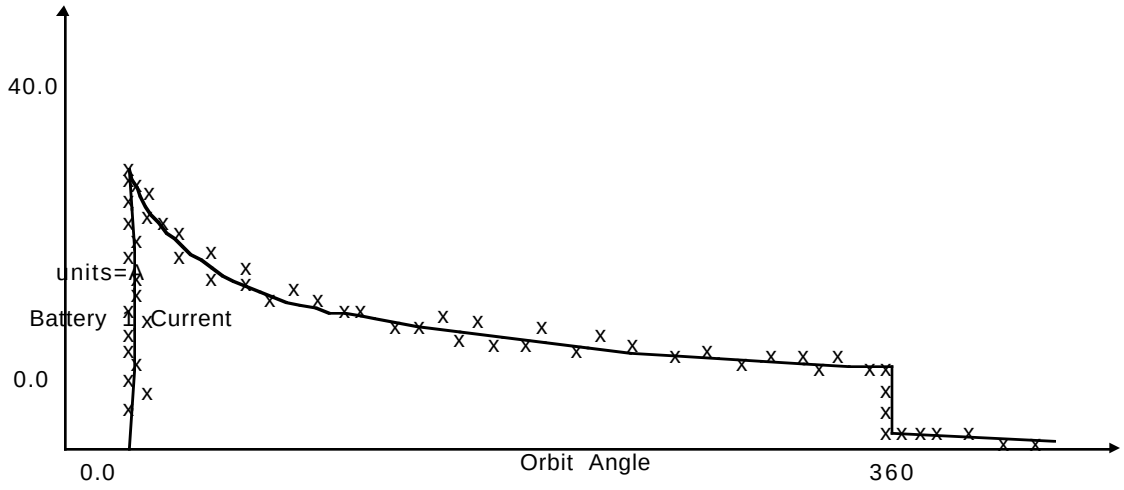

Figure 3.3-4. Signature Analysis Example. Telemetry within Statistical Model bounds.

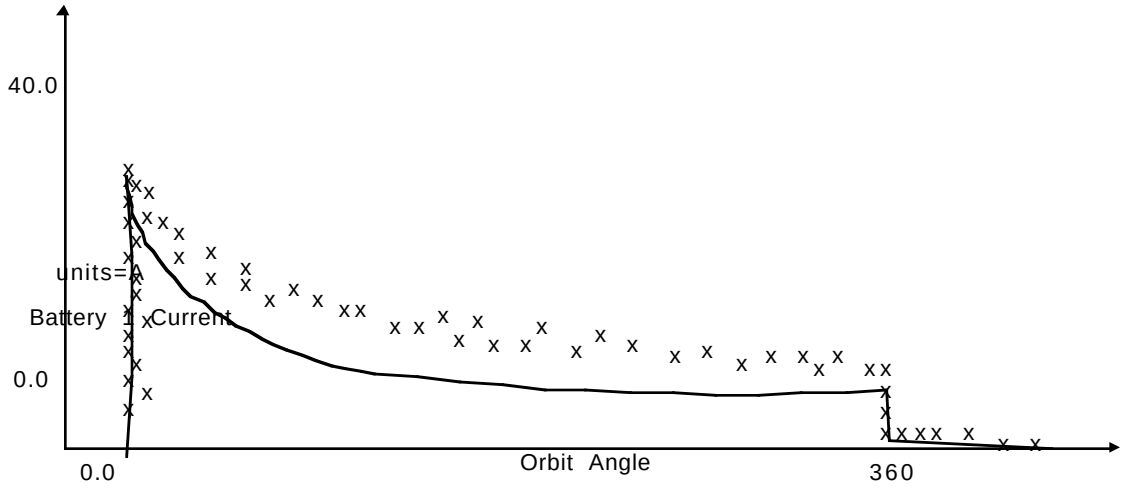

Figure 3.3-5. Signature Analysis Example. Telemetry outside of Statistical Model bounds.

3.3 Scenario Detailed Description

This section provides a step-by-step description of the EOC Off-line Analysis Scenario.

Figure 3.3.1-1 is an Analysis Processing Data Flow Diagram that identifies the Flight Operations Team role in the use of the FOS Analysis Software. Also shown are external EOSDIS elements and the major data flows between the FOS and these elements.

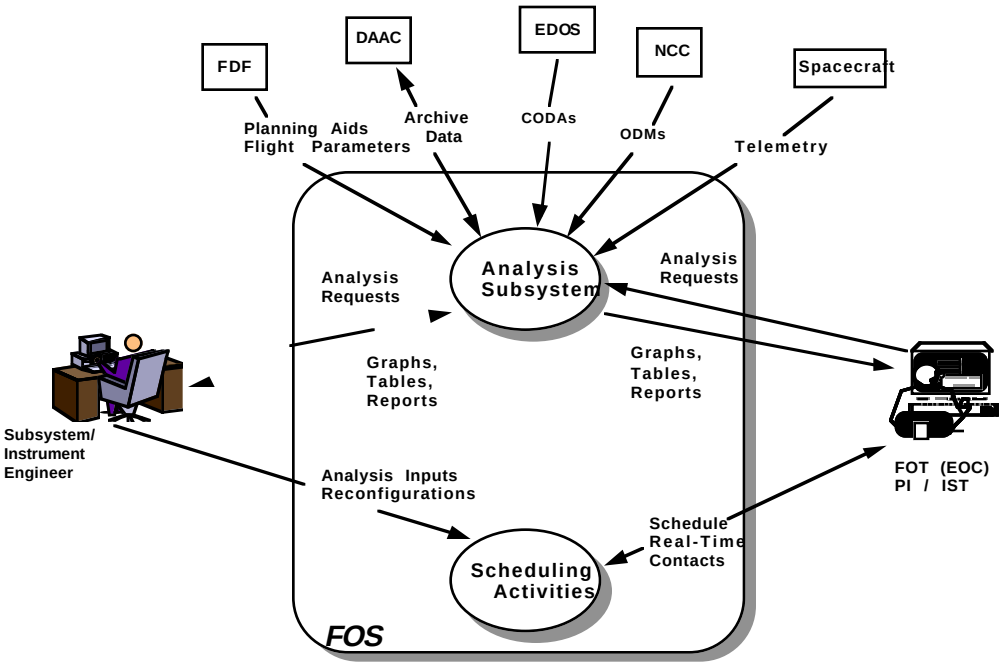

Figure 3.3.1-1. FOS Analysis Processing Flow

Figure 3.3.1-2 is an Off-line Analysis Operational Flow Chart. It shows the desired(automated) execution of the Analysis software in support of Spacecraft and Instrument maintenance activity.

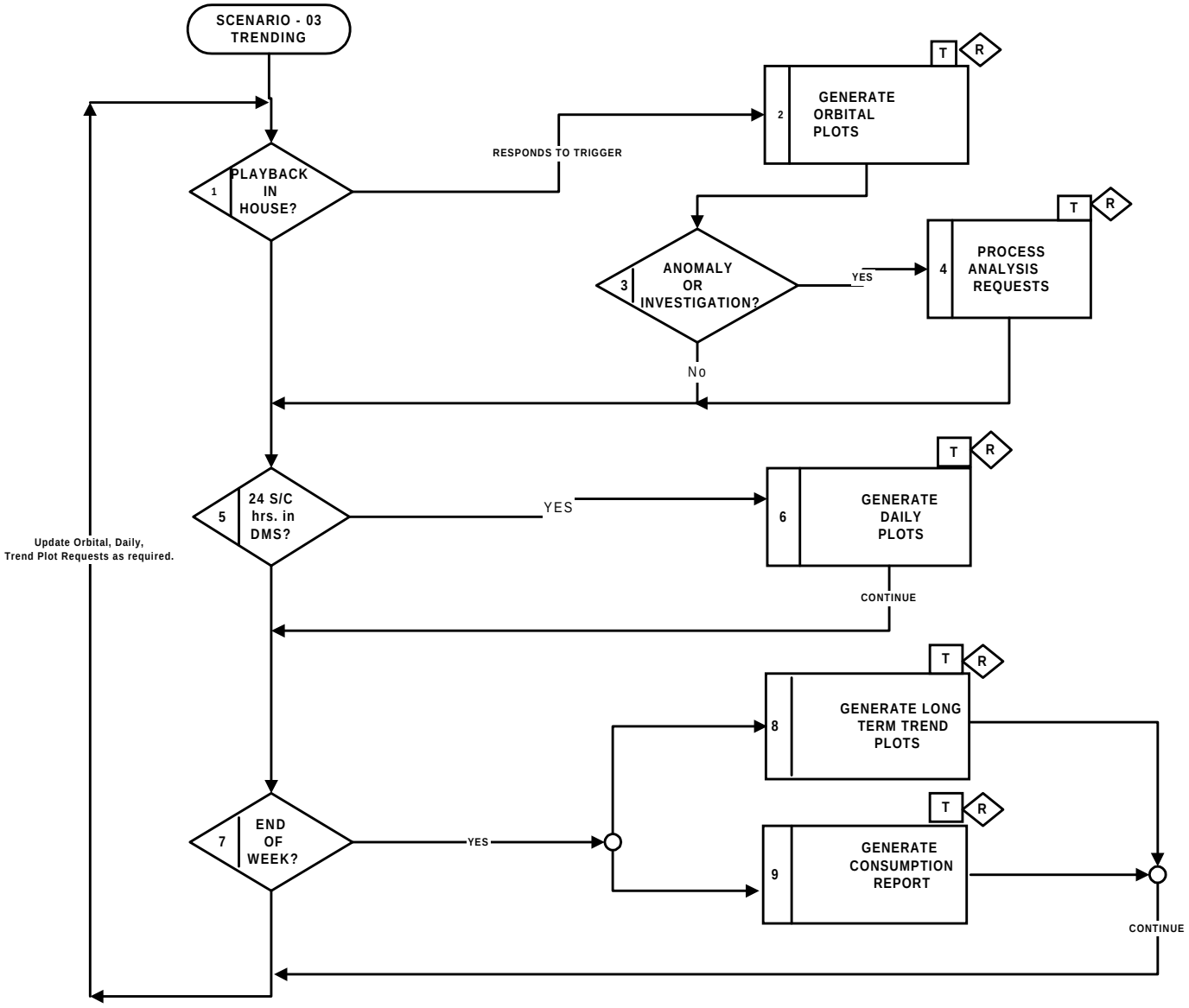

Figure 3.3.1-2. Analysis Flow Chart

Step 1: SSR Playback Processing

EOC software detects the completed reception of an SSR playback into the DMS.

Tools:

Trigger Mechanism

- Specify Pre-canned Analysis Request to event message relationship.

Step 2: Submit Orbital Graphs

Upon detection of the completion of an SSR playback, an Analysis Request for an Orbital Graph, containing the appropriate start and stop times and a pre-defined list of S/C and Instrument telemetry, derived telemetry(algorithms), FDF data, ODMS and CODAs, would be automatically submitted for processing.

Tools:

Analysis Request Window

- Specify mnemonics for processing
- Specify desired filtering
- Specify time span.
- Specify output.

Reports:

Analysis Request Processing Log.

Step 3: Additional Processing for Anomaly Investigation

The On-line Evaluators will review the Orbital Graphs to identify anomalous behavior. Based upon the contents of the Orbital Graphs and instructions provided by the subsystems engineers, the Evaluators will determine if additional telemetry processing is required to support an apparent anomaly. The Evaluators will prepare the additional Analysis Requests using the FUI provided Analysis Request Window. The data set(spacecraft and ground system telemetry) that was used for the generation of the orbital graph may be reused for additional graphing. Where the Orbital graph's time span would be the during of the period between consecutive SSR playbacks, additional requests would span the deviant telemetry, and the mnemonics may be rearranged to aid in correlation. If the mnemonics under investigation were filtered during the Analysis Request processing, the additional request would decommutate the mnemonics at their full resolution.

Tools:

Analysis Request Window

- Specify mnemonics for graphing.
- Specify dataset for reuse.
- Specify desired filtering.

- Specify time span.
- Specify output.

Reports:

Analysis Request Processing Log.

Step 5: Test for 24 Hours of S/C Telemetry.

FOS software will test for the reception of 24 hours of S/C telemetry into the DMS.

Tools:

Standing Orders (or Trigger)

- Specify Pre-canned Analysis request
- Specify time for execution
- Specify frequency for Report
- Specify relative time for Report

Step 6: Daily Graph Submission

Upon detection of the completion of the reception of 24 S/C hours, an Analysis Request for a Daily Graph, containing the appropriate start and stop times and a pre-defined list of S/C and Instrument telemetry, derived telemetry(algorithms), FDF data, ODMS and CODAs, would be automatically submitted for processing. Daily Graphs are typically graphed versus Orbit Angle or time and may include polar graphs, log graphs and 3-D surface graphs.

Tools:

Analysis Request Window

- Specify mnemonics for processing
- Specify desired filtering
- Specify time span.
- Specify output.

Reports:

Analysis Request Processing Log.

Step 7: Test for End of Calendar Week

The Analysis software will determine the end of week period as specified in a standing order and submit pre-canned analysis requests.

Tools:

Standing Orders

- Specify Pre-canned Analysis request

- Specify time for execution
- Specify frequency for Graph or Report
- Specify relative time for Graph or Report

Step 8: Long Term Trend Graph Submission

Long term trend graphs will be used by the FOT to assess the overall aging of the S/C and Instrument subsystems and the decay of the S/C orbit.

Tools:

Analysis Request Window

- Specify mnemonics for processing
- Specify desired filtering
- Specify time span.
- Specify output.

Reports:

Analysis Request Processing Log.

Step 9: Consumption Report Generation

This report will be generated once per week by a standing order and on demand by the FOT.

Reports

Select Consumption Report

Analysis Request Processing Log.

3.4 Activity Definition Configuration Management Scenario

3.4.1 Description

This scenario depicts the use of the FOS software by the FOT for the configuration management of Activity definitions used in the scheduling of S/C and ground script commands. The specific tools used and reports generated are called out in each step of the scenario.

Figure 3.4.1-1 is an Activity Definition Configuration Management Data Flow Diagram that identifies the Flight Operations Team role in the use of the FOS Software. Also shown are the major data flows between the FOS elements.

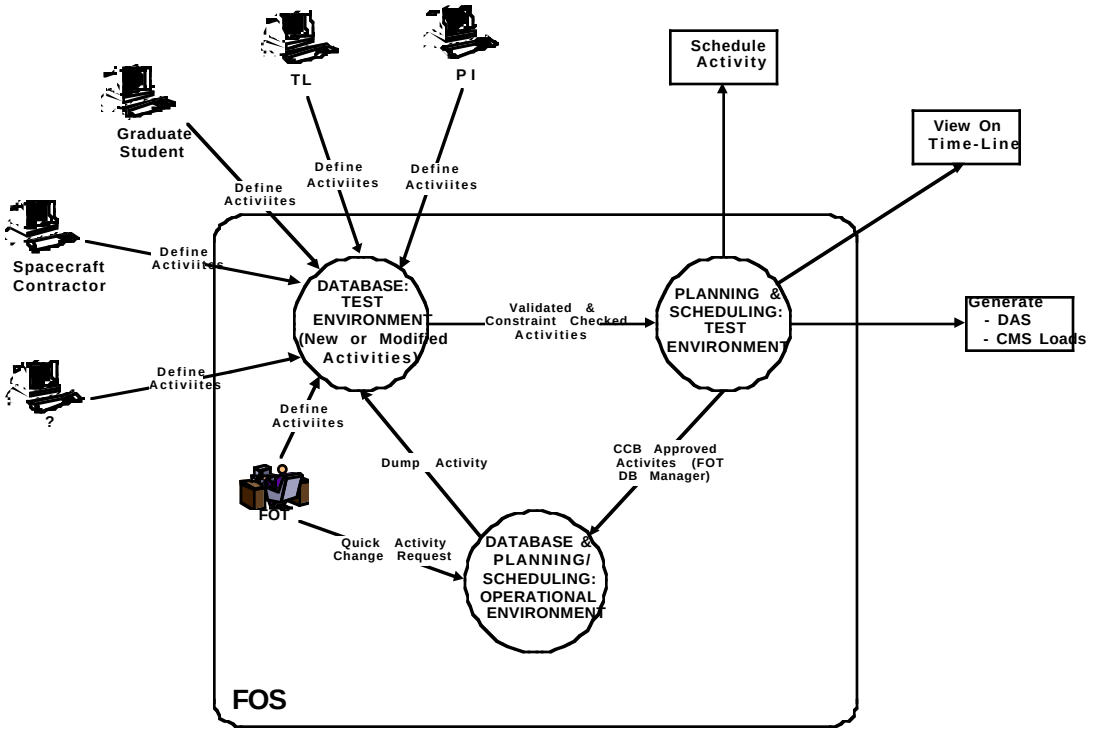

Figure 3.4.1-1. Configuration Management - Activity Definitions

Figure 3.4.1-2 is an Activity Definition Flow chart that shows the operation operations flow within the FOS software.

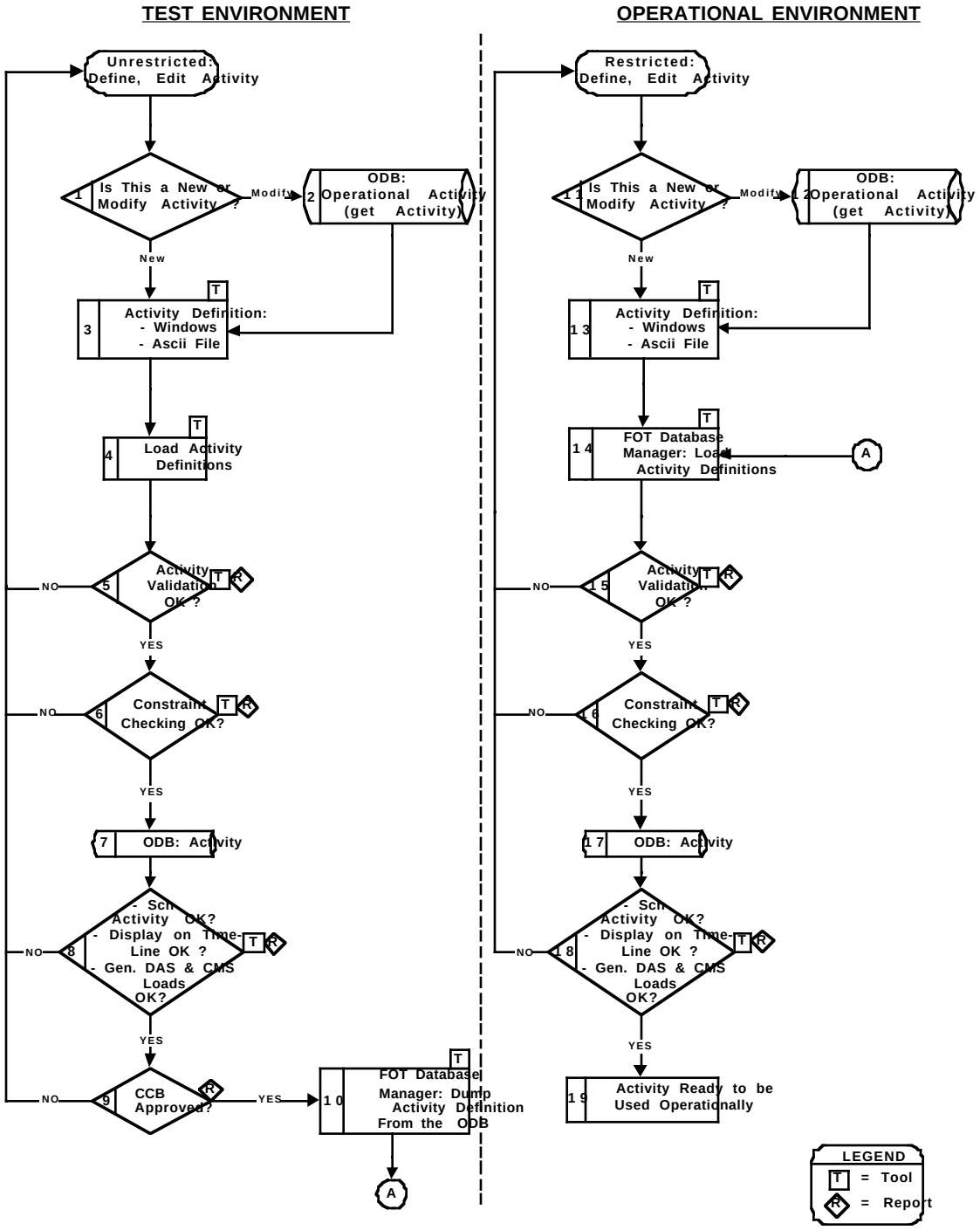

Figure 3.4.1-2. Database Activity Flow

3.4.2 Use/How Often

This scenario forms the guidelines for the FOT in the processes of creation, constraint checking , and configuring all activity definitions. Activity definitions will be created as needed throughout the life of the AM-1 mission. The bulk of the activity definitions will be created pre-launch and during the post-launch In-Orbit Checkout(IOC) period. The AM-1 subsystem engineers will be responsible for the creation of all Activity Definitions.

3.4.3 Assumptions/Pre-requisites

- Instrument Activities will be written by the Instrument Contractors.
- Spacecraft Activities will be written by the Spacecraft Contractor.
- Ground Activities will be written by the FOT.

3.4.4 Detailed Description

This section provides a step-by-step description of the Activity Flow Chart (Fig. 5-2). The flow chart is broken into two parts. The Test Environment has unrestricted access and is used to define new Activities, modify existing Activities, validate and constraint check Activities and finally test the Activities (Ground Script & ATC Load) against the spacecraft simulator (if appropriate) before submitting them to the CCB. Once a Activity has been approved by the CCB it is loaded by the FOT into the Operational Environment (access restricted to the FOT). At this point the Activity is re-validated and re-constraint checked. Finally, after passing all checks the Activity can be used operationally by the FOT.

<u>TEST ENVIRONMENT (unrestricted access)</u>

Step 1: Is This a New or Modified Activity?

If this is a new activity , then go to step 3 and create a new Activity. Else, retrieve existing Activity from the Operational Data Base (ODB).

Step 2: ODB: Operational Activity

Get Activity from the Operational Data Base.

Step 3: Activity Definitions

The Activity Scheduler Tool (windows) can be used to create new Activities or modify existing Activities that exist in the test directory. The advantage of using windows is that it has pull down menus for directives and command and telemetry mnemonics (interactive). A person can also create a Activity using any ASCII editor. Next, the Activity is copied into the their own local directory. At this point the Activity can be imported into the Activity Scheduler Tool.

Tool:

Activity Scheduler

- Resource

- Command List
- Parameters
- Etc.

Step 4: Load Activity Definitions

Load activity into the Project Data Base (PDB).

Tool:

Activity Scheduler

- Select Apply

Step 5: Validation OK?

Once the "Apply" button is selected in step 4 this step occurs automatically. The Activity is validated by:

- Verify command mnemonics exist in the database (PDB)
- Verify telemetry mnemonics exist in the database (PDB)
- Verify ground telemetry mnemonics exist.
- Check syntax.
- Check ranges.
- Check valid values.
- Etc.

Tool:

Activity Scheduler

- Press the "Apply" button

Report:

Syntax Error Report

- Type of error
- Number of errors

Validation Error Report

- Type of error
- Number of errors

Step 6: Constraint Checking OK?

Once the "Apply" button is selected in step 4 this step occurs automatically. CMS constraint checks the Activity by:

- Verify command order
- Verify command spacing (time between commands)
- Etc.

Tool:

Activity Scheduler

- Press the "Apply" button

Report:

Constraint Error Report

- Type of error (soft, hard)
- Number of errors

Step 7: ODB: Activity

Once the Activity has passed Validation, and Constraint Checking the user will generate the Operational Data Base (ODB).

Step 8: Schedule Activity OK?

Before submitting the Activity to the CCB the originator or FOT must try to schedule the activity in the test environment. Verification that the activity was scheduled correctly includes:

- The activity was displayed on the Time-Line correctly.
- The generation of the Detailed Activity Schedule (DAS) and CMS Loads were done correctly.

Tool:

EOC Master Time-Line

- Verify Activity scheduled correctly
- Etc.

Report:

Activity Listing

- New Activity
- Old Activity with redlines (if applicable)
- CCR, Submit to CCB

DAS Report

- Detailed listing with New Activity incorporated
- Etc.

CMS Load Reports

Detail listings

- Etc.

Step 9: Configuration Control Board (CCB) Approved?

Once the Activity has past the above steps (checks) the originator fills out a CCR and submits it to the CCB. If the CCB approves the Activity, then the FOT Database Manager will dump the activity from the test environment and then load it in to the operational environment. If the Activity is not accepted a redline copy will be given back to the originator. The CCB members will include: Spacecraft Manager, Ground System Manager, Flight Ops Manager, NASA Representative.

3.5 Configuration Management of Command Procedures Scenario

3.5.1 Description

This scenario describes Configuration Management of EOC Command Procedures. Command Procedures typically contain a set of EOS Command Language (ECL) Directives that perform a single function (e.g., safe the spacecraft, safe an instrument, switch to a redundant component, pre-pass configuration of the ground system, post-pass configuration of the ground system, etc). Command Procedures are only executed from the ground (not on the spacecraft) by the Flight Operations Team (FOT). They are the **primary** ground mechanism used by the FOT for configuring/re-configuring both the ground and space segments. Command Procedure will be classified as either Normal or Contingency.

Figure 3.5.1-1 is a Configuration Management Command Procedure Data Flow Diagram that identifies the Flight Operations Team role within the EOS Operations Center (EOC). Also shown are external elements and the major data flows between the EOC and these elements. The EOC will receive Command Procedures from the spacecraft contractor, the PIs , the FOT, and etc.

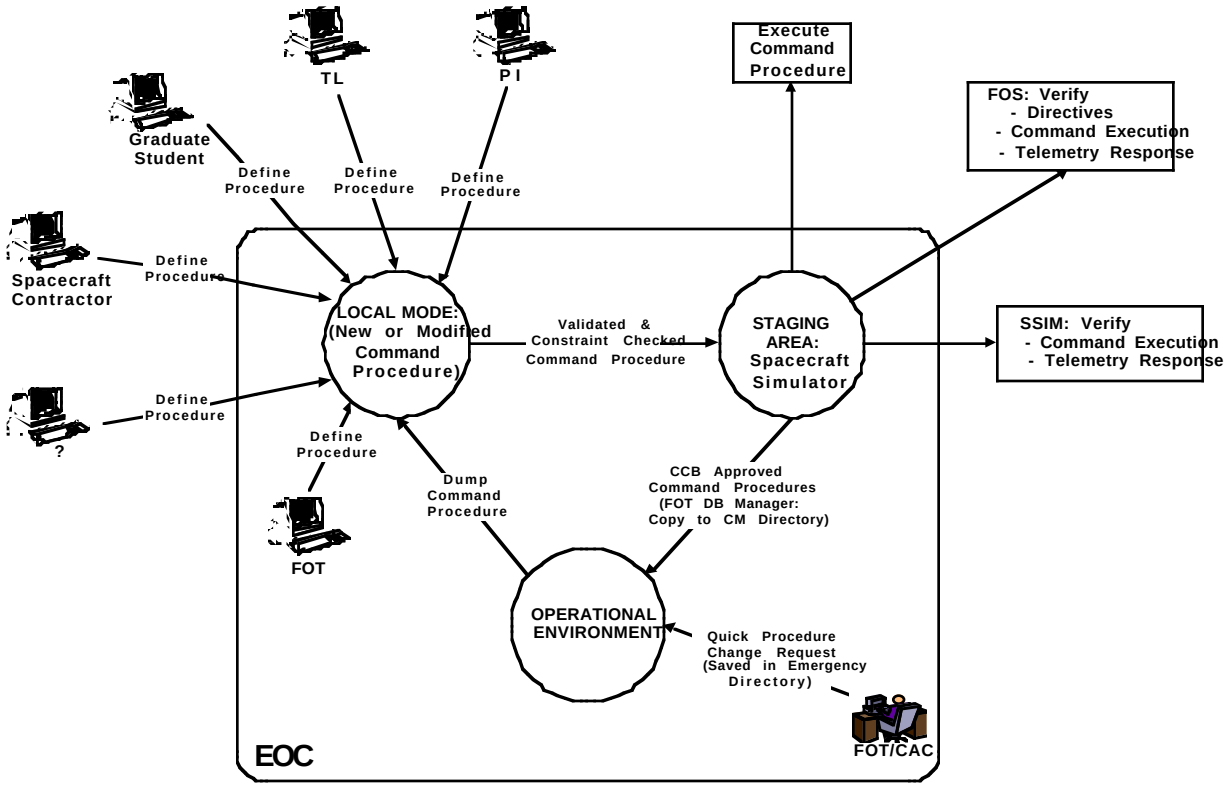

Figure 3.5.1-1. Configuration Management - Command Procedure

Figure 3.5.1-2 is a Command Procedure Flow Chart. It shows that people will create, validate and test new Command Procedures in the Test Environment. Once a Command Procedure has bee approved by the CCB it will be copied to the Operations Environment by the FOT.

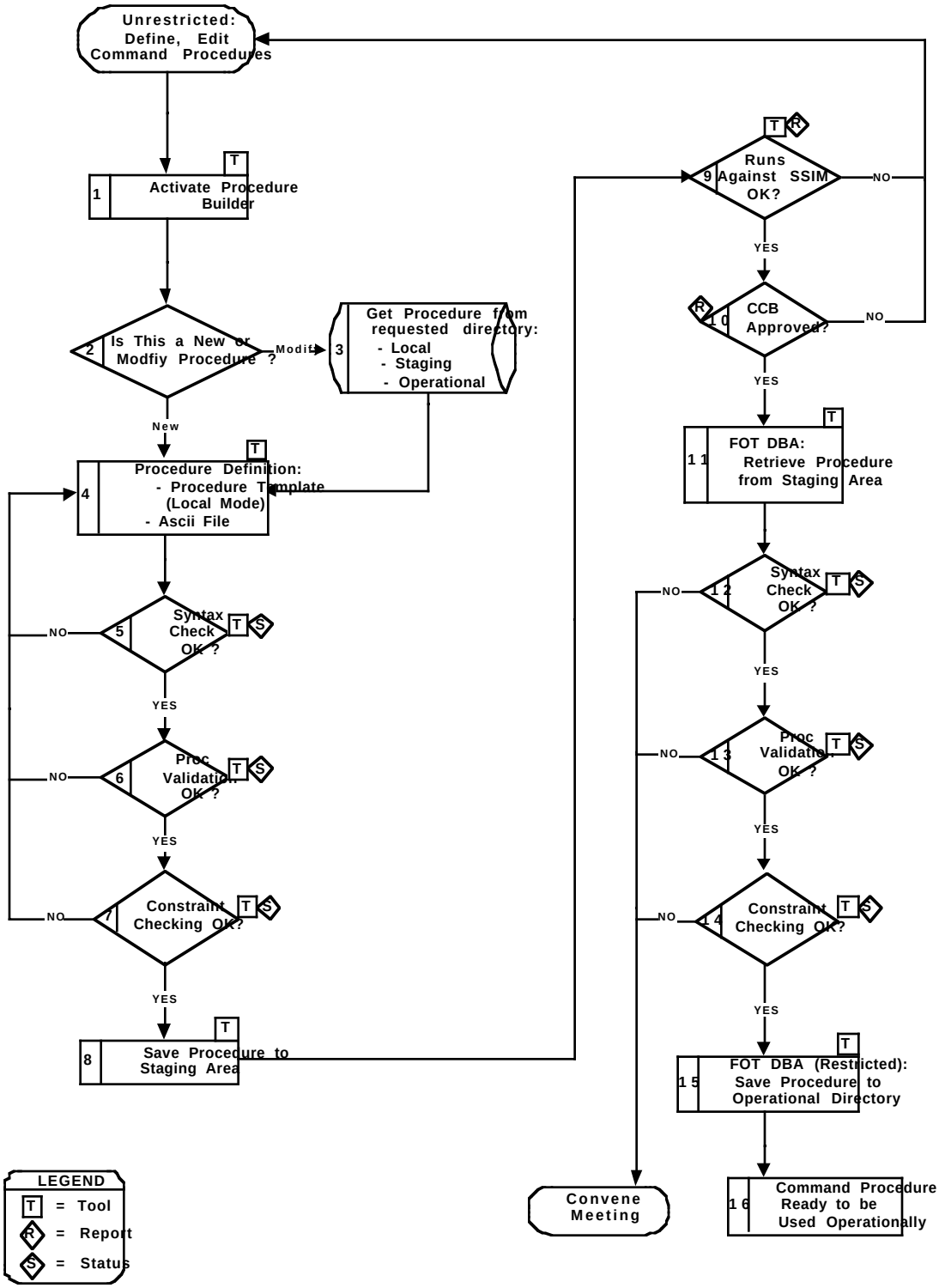

Figure 3.5.1-2. Command Procedure Flow Chart

3.5.2 Use/How Often

The FOT will conveine a Configuration Management board to support the maintenance of the EOC Command Procedures. The Flight Segment Engineer shall act as the chairman of this board. This board will exist as needed to approve or disaprove new procedures, modifications to existing procedures and remove of obsolete procedures. Disposition on all procedures brought before this board are forwarded to the NASA customer.

3.5.3 Assumptions / Pre-requisites

- Instrument Command Procedure will be written by the Instrument Contractors.
- Spacecraft Command Procedures will be written by the Spacecraft Contractor.
- Ground Command Procedures will be written by the FOT.

3.5.4 Detailed Description

This section provides a step-by-step description of the Command Procedure Configuration Management Flow Chart (Fig. 5-2). The flow chart is broken into two parts. The Test Environment has unrestricted access and is used to define new Command Procedure, modify existing Command Procedures, validate and constraint check Command Procedures and finally test the Command Procedures against the spacecraft simulator before submitting them to the CCB. Once a Command Procedure has been approved by the CCB it is copied by the FOT into the Operational Environment (access restricted to the FOT). At this point the Command Procedure is re-validated and re-constraint checked. Finally, after passing all checks the Command Procedure can be used operationally by the FOT.

Step 1: Activate Procedure Builder

The first step is to bring up the Procedure Builder.

Tool:

Control Window

- Select Utilities
- Select Procedure Builder

Step 2: Is This a New or Modified Command Procedure?

If this is a new procedure , then go to step 3 and create a new command procedure. Else, retrieve existing Command Procedure from request directory.

Step 3: Command Procedure from requested directory

Get Command Procedure from one of the following directories: Local, Staging, or Operational.

Step 4: Command Procedure Definitions

The Procedure Builder Tool (windows) can be used to create new Command Procedures or modify existing command procedures that exist in the test directory. The advantage of using windows is that it has pull down menus for directives and command and telemetry mnemonics (interactive). A person can also create a Command Procedure using any ASCII editor. Next, the Command Procedure is copied into the their own local directory. At this point the Command Procedure can be imported into the Procedure Builder Tool.

Tool:

Procedure Builder

- Enter Directives
- Enter Command Mnemonics
- Enter Telemetry Mnemonics
- etc.

Step 5: Syntax Check OK?

Once a Command Procedure is in the Procedure Builder Tool the syntax indicator box is selected. The FUI syntax checker parses each line of the procedure. If a syntax error is found, the message line indicates the line number where the error was detected, and the syntax indicator box turns red and displays the word FAIL. If the syntax check passes, the indicator box turns green and displays the word PASS.

Tool:

Procedure Builder

- Press the Syntax indicator box

Report:

Syntax Error Report

- Line number where error is found
- Type of error
- Number of errors

Step 6: Validation OK?

If the validation indicator box is selected the Command Procedure is syntax checked and then sent to CMS for validation. Next, CMS validates the Command Procedure by:

- Verify command mnemonics exist in the database (PDB)
- Verify telemetry mnemonics exist in the database (PDB)
- etc.

Tool:

Procedure Builder

- Press the Validation indicator box
- FUI Syntax check Command Procedure
- Send procedure to CMS for validation

Command Procedure Validation

- Press Validate box
- Validate each command against the PDB
- Validate each telemetry against the PDB
- etc.

Report:

Syntax Error Report

- Type of error
- Number of errors

Validation Error Report

- Type of error
- Number of errors

Step 7: Constraint Checking OK?

CMS constraint checks the Command Procedure by:

- Verify command order
- Verify command spacing (time between commands)
- etc.

Tool:

Command Procedure Validation

- Press Command-Level constraint checking box
- Check soft constraints (can be allowed to remain in procedure)
- Check hard constraints (can not be violated)
- etc.

Report:

Constraint Error Report

- Type of error (soft, hard)
- Number of errors

Step 8: Save Procedure to Staging Area

Once the Command Procedure has passed Syntax Checking, Procedure Validation, and Constraint Checking the user will save the Procedure to the Staging area.

Step 9: Runs Against Spacecraft Simulator (SSIM) OK?

Before submitting the Command Procedure to the CCB the originator or FOT must run the procedure against the spacecraft simulator. This is the most important step in the process because it demonstrates the operational functionality of the Command Procedure with respect to both the EOC ground system and spacecraft. The tester will verify that the Command Procedure executes as expected in the operation environment. The tester will verify that the FOS software likes the Command Procedure by: accepting all directives within the procedure, commands execute properly, and telemetry on pages update correctly. The tester will verify that the spacecraft simulator accepts commands sent by the Command Procedure and executes them correctly.

Tool:

Spacecraft Simulator Menu

- Boot
- Initiate Software
- Select Scenario (Launch, Early Orbit, Normal Ops, Day, Night)
- Connect to FOS String
- etc.

Report:

Command Procedure Listing

- New Command Procedure
- Old Command Procedure with redlines (if applicable)
- CCR, Submit to CCB

Step 10: Configuration Control Board (CCB) Approved?

Once the Command Procedure has past the above steps (checks) the originator fills out a CCR and submits it to the CCB. If the CCB approves the Command Procedure, then the FOT Database Manager will copy it to the operational directory. If the Command Procedure is not accepted a redline copy will be given back to the originator. The CCB members will include: Spacecraft Manager, Ground System Manager, Flight Ops Manager, NASA Representative.

Report:

CCB Approved Command Procedure Sign-off Sheet

- New Command Procedure
- Old Command Procedure with redlines (if applicable)
- CCR, Submitted to CCB

Step 11: FOT DBA Retrieve Procedure from Staging Area

The FOT Database Manager will retrieve the CCB approved Command Procedures from the Staging Area. Once retrieved the FOT DB Manager will re-syntax check, re-validate and re-constraint check the Command Procedure.

Note - all the checks should pass since all the checks were performed in the test environment prior to submitting the Command Procedure to the CCB.

Tool:

Database Manager's Tool

- Search for Command Procedure Filename in the Staging Area.

Step 12: Syntax Check OK?

FOT DB Manager performs. Same as Step 5.

Step 13: Validation OK?

FOT DB Manager performs. Same as Step 6.

Step 14: Constraint Checking OK?

FOT DB Manager performs. Same as Step 7.

Step 15: Save Command Procedure to Operations Directory

Once the Command Procedure has passed Syntax Checking, Procedure Validation, and Constraint Checking the FOT Database Manager will save the Procedure to the operations directory.

Tool:

Database Manager's Tool

- Copy Command Procedure Filename From Test Directory to Ops Directory.

Step 16: Command Procedure Ready to be Used Operationally

FOT DB Manager certifies the Command Procedure for operational use.

3.5.5 Activity Phase Tools & Reports Summary

The following list is a summary of the FOS provided tools and reports identified in this scenario:

a. Scheduling
   1. Tools
      (a) FUI - Procedure Builder
      (b) CMS - Command Procedure Validation
   2. Reports
      (a) FUI - Syntax Error Report

(b) CMS - Validation Error Report

(c) CMS - Constraint Error Report

(d) Command Procedure Listing

b. Real-Time

1. Tools

(a) Control Window

2. Reports

n/a

c. Analysis

1. Tools

(a) Database Manager's Tool

2. Reports

n/a

d. Miscellaneous

(1) Tools

(a) Spacecraft Simulator Menu

(2) Reports

(a) CCB Approved Command Procedure Sign-off Sheet

3.6 FDF Command Load Uplink Scenario

3.6.1 Description

This scenario describes the generation and uplink of AM-1 Command data derived from FDF provided data products. The FOT will use the Analysis, Planning and Scheduling(PAS), Command Management System(CMS), Real-Time System(RTS), and the FDF provided system, for the generation of the command loads for the AM-1 Spacecraft.

Figure 3.6.1-1 is a Data Flow Diagram(DFD) that identifies the Flight Operations Team role in this scenario.

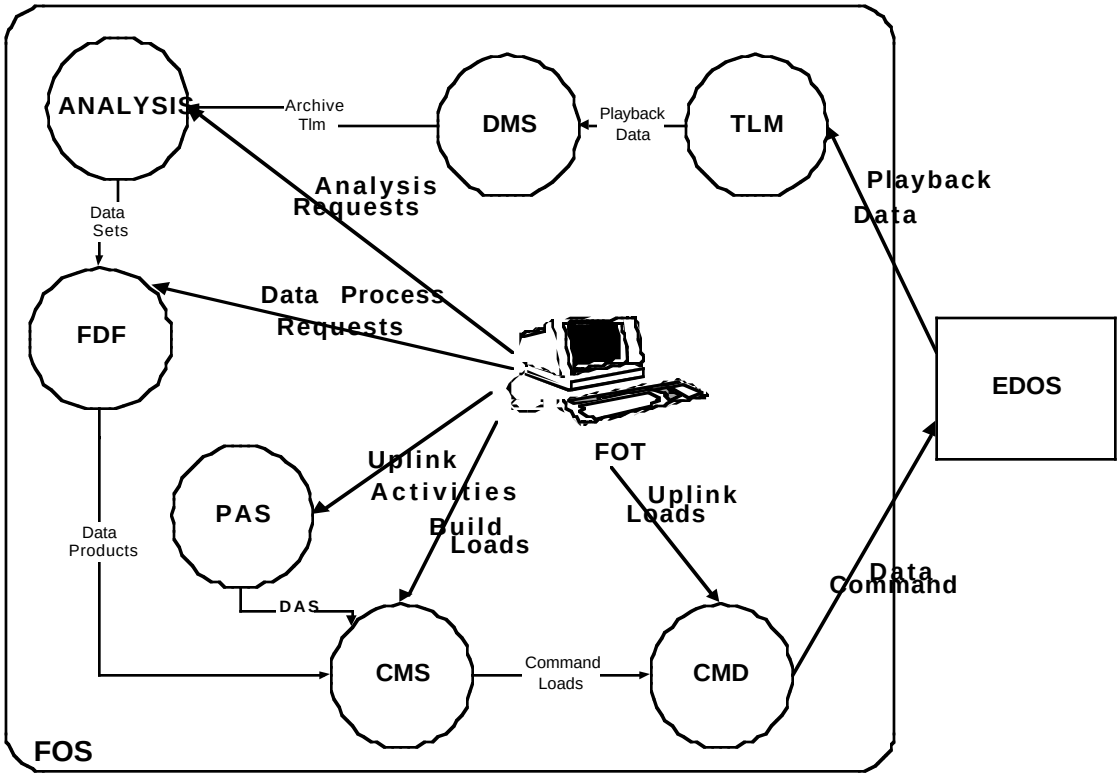

Figure 3.6.1-1. FDF Command Load Data Flow Diagram

Figure 3.6.1-2 is an FDF Command Load Flow Chart. It shows the FOT's logical usage of the FOS and FDF software in support of their FDF Command Load requirements.

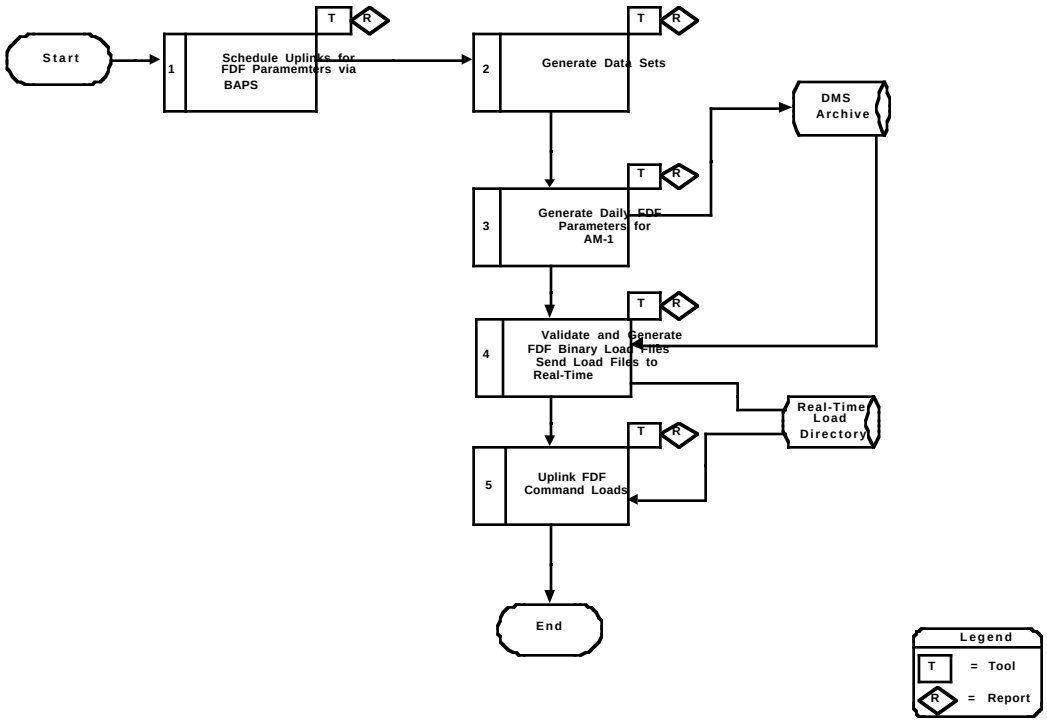

Figure 3.6.1-2. FDF Command Load Generation Flow Chart

3.6.2 Use/How Often

FDF command data such as ephemeris information, will be produced on a daily basis for uplink. Navigation and calibration information will be produced as required.

3.6.3 Assumptions / Pre-requisites

The FDF staff will train the FOT staff to operate the FDF system. The FDF provided system will be jointly operated by the FOT and FDF staff during the Pre-Launch, Launch, and IOC periods. The FOT will generated the routine products. The FDF staff will support anomaly investigations, Orbit Adjust maneuvers, Inclination Adjust maneuvers, calibration exercises to produce the as needed data.

3.6.4 Detailed Description

This section provides a step-by-step description of the FDF Command Load Generation Flow Chart(Figure 3.6.1-2).

Step 1: Uplink Scheduling

The FOT will schedule the uplink of the FDF command loads via the Planning and Scheduling Software. Baseline activity profiles will be created and implemented to assign the uplink activities to specific real-time contacts in the PAS timeline.

Tool:

BAP Definer

- Enter BAP Name
- Enter Resource Name
- List Activities
- Press OK

Report:

Activity Schedule Report

- Event
- Activity Name

Step 2: Data Set Generation

The FOT will prepare Standing orders for the Analysis Software to generate the required telemetry datasets for the FDF system. The Analysis software will then automatically create the telemetry datasets for the FDF system

Tools:

Standing Orders

- Specify Pre-canned Analysis Request
- Specify time for execution
- Specify frequency for Request
- Specify relative time for Request

Reports:

Analysis Request Processing Log.

Step 3: Generate FDF Data Products

Execute FDF provided software to generate desired data products.

Step 4: Generate and Validate Load Files

The CMS software will detect the existence of the FDF data products and automatically generate the associated uplink loads, performing all required continuity and validity checks on the loads created. As a minimum, the checks performed will be the same performed onboard the spacecraft.

Step 5: Uplink FDF Command Loads

Expansion of the Detailed Activity Schedule(DAS) will place the FDF command load activities into the ground script. The FOT will execute the ground script contents during the scheduled real-time contacts to load the FDF command data to the AM-1 spacecraft.

3.7 Configuration Management Pages/Rooms Scenario

3.7.1 Description

This scenario describes Configuration Management of Pages and Rooms. Pages can be defined by anyone (Display Builder) and consist of at least one of the following: Alphanumeric Displays, Graphs, Tables, and Schematics.

- Alphanumeric displays will display telemetry parameters in real-time. From an alphanumeric display , a user will be able to view discrete and analog telemetry parameters, their data quality and any limit violations.
- Graphs will be either a real-time or a historical graph displaying up to six telemetry parameters. Graphs will consist of either telemetry values vs. time, or telemetry values vs. a telemetry value.
- Tables will display up to 50 columns of real-time and history telemetry values and their associated times.
- Two dimensional schematic displays will present telemetry values for both spacecraft and instrument data. A schematic is a representation of data by combining visual items such as rectangles, lines, circles, points, etc. These items can change color according to the telemetry parameter limits.

Rooms include one or more Pages. A user defines the format of a Room/Page and then saves the format for later use.

Figure 3.7.1-1 is a Configuration Management Page/Room Data Flow Diagram that identifies the Flight Operations Team role within the EOS Operations Center (EOC). Also shown are external elements and the major data flows between the EOC and these elements. The EOC will receive Pages/Rooms from the spacecraft contractor, the PIs , the FOT, and etc.

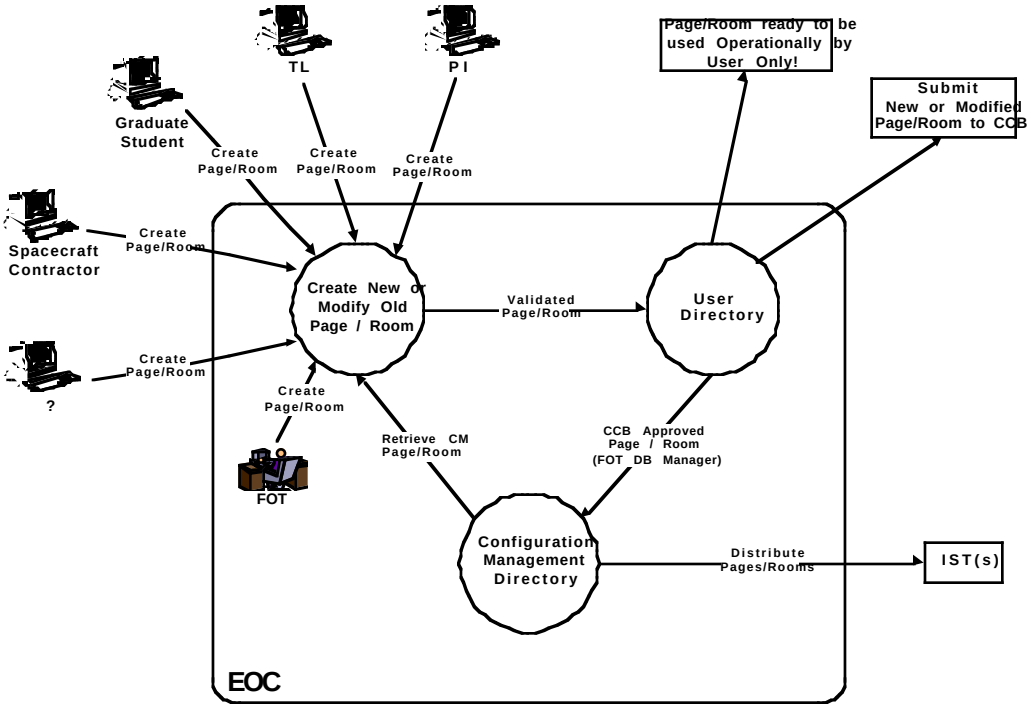

Figure 3.7.1-1. Configuration Management - Page/Room

Figure 3.7.1-2 is a Page/Room Flow Chart. It shows that people will create, validate and test new Pages/Rooms in their own user directory. Once a Page or Room has been approved by the CCB it will be copied to the CM controlled directory by the FOT.

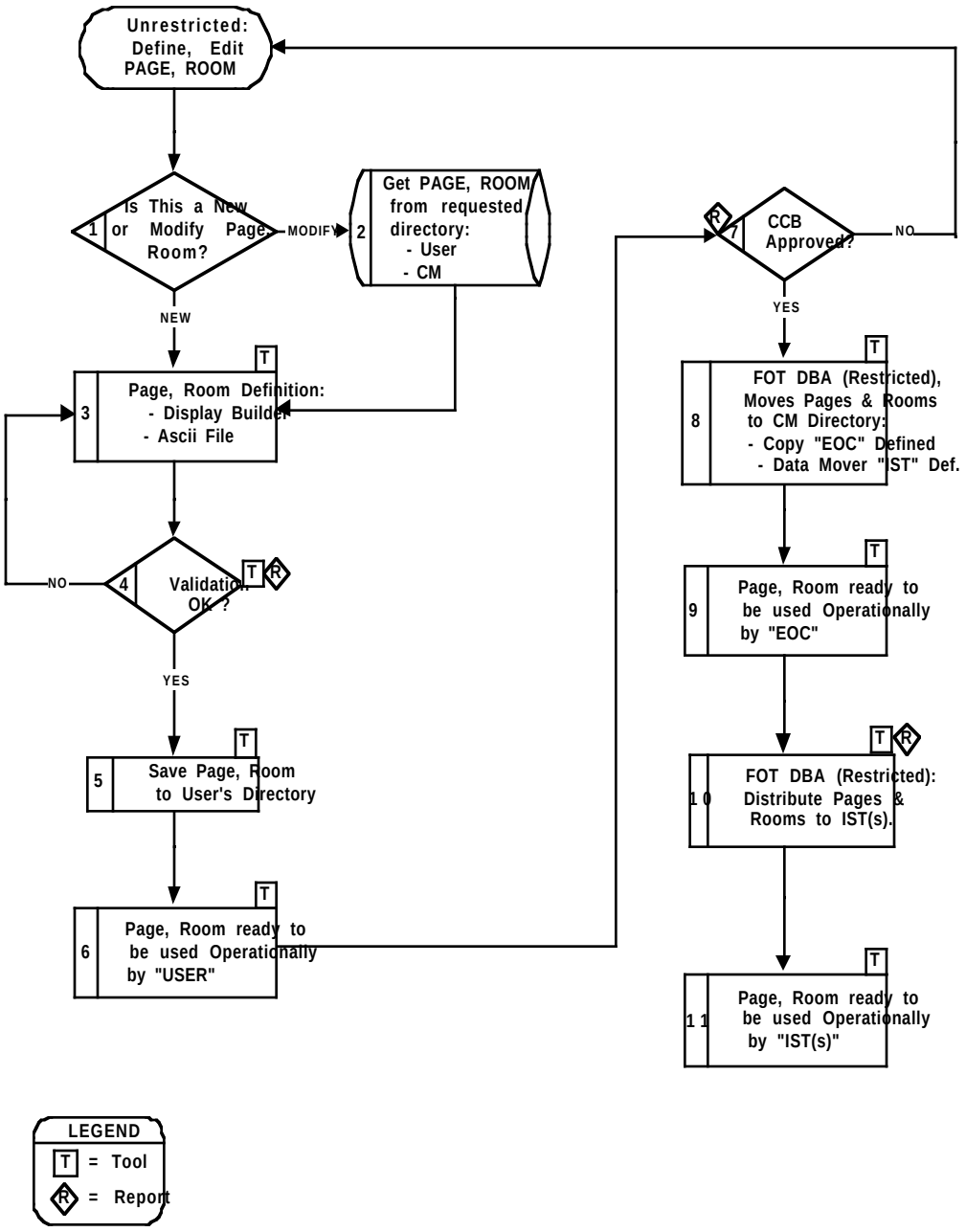

Figure 3.7.1-2. Page/Room Flow Chart

3.7.2 Use/How Often

The FOT will use Pages and Rooms daily to monitor the ground and spacecraft segments.

3.7.3 Assumptions / Pre-requisites

- Instrument Pages/Rooms will be written by the Instrument Contractors and FOT.
- Spacecraft Pages/Rooms will be written by the Spacecraft Contractor and FOT.
- Ground Pages/Rooms will be written by the FOT.

3.7.4 Detailed Description

This section provides a step-by-step description of the Page/Room Flow Chart (Fig. 7-2). The flow chart is broken into two parts. The User Environment/Directory is used to define new Pages/Rooms, modify existing Pages/Rooms and validate the Pages/Rooms. At this point the Page/Room is ready to be used operationally by the "User". If the user feels the Page/Room they developed would be beneficial to other users, it should be submitted to the CCB. Once a Page/Room has been approved by the CCB it is copied by the FOT into the Operational CM Directory (access restricted to the FOT). At this point the Page/Room can be used operationally by the FOT.

Step 1: Is This a New or Modified Page/Room?

If this is a new Page/Room , then go to step 3 and create a new Page/Room. Else, retrieve existing Page/Room from the User or CM directory.

Step 2: Get Page/Room

The "User" directory contains all the Pages/Rooms that are being tested for operational use. The "CM" directory contains all CCB approved Pages/Rooms.

Step 3: Page/Room Definitions

The Display Builder Tool (windows) can be used to create new Pages/Rooms or modify existing Pages/Rooms that exist in the "User" or "CM" directory. The advantage of using windows is that it has pull down menus for telemetry mnemonics (interactive). A person can also create a Page/Room using any ASCII editor. Next, the Page/Room is copied into the "User" directory. At this point the Page/Room can be imported into the Display Builder Tool.

Tool:

Display Builder

- Enter Telemetry Mnemonics
- etc.

Step 4: Validation OK?

If the validation indicator box is selected the Page/Room is syntax checked and telemetry mnemonics are verified.

Tool:

Display Builder

- Press the Validation indicator box
- Syntax check Page/Room
- Validate each telemetry against the PDB

Report:

Validation Error Report

- Type of error
- Number of errors

Page/Room Listing

- New Page/Room
- Old Page/Room with redlines (if applicable)
- CCR, Submit to CCB

Step 5: Save Page/Room

Save Page/Room to "User" Directory. The "User" Directory will contain any Page/Room definitions that the user has created or modified using the Display Builder.

Tool:

Display Builder

- Press the Save indicator box

Step 6: Page/Room Ready to be Used

Pages and Rooms are ready to be used Operationally by the User who defined the Page/Room.

Tool:

Control Window

- Select Room Buttons
- Select Room from the Rooms Selection Dialog
- Select Page from Windows Selection dialog
- Enter a directive to activate a Room/Page

Step 7: Configuration Control Board (CCB) Approved?

Once the Page/Room has past the above steps (checks) the originator fills out a CCR and submits it to the CCB. If the CCB approves the Page/Room, then the FOT Database Manager will copy it to the operational directory (CM controlled directory). If the Page/Room is not accepted a redline copy will be given back to the originator. The CCB members will include: Spacecraft Manager, Ground System Manager, Flight Ops Manager, NASA Representative.

Report:

CCB Approved Page/Room Sign-off Sheet

- New Page/Room
- Old Page/Room with redlines (if applicable)
- CCR, Submitted to CCB

Step 8: Move Page/Room to Operations Directory ("CM")

The FOT Database Manager copies CCB approved Page/Rooms to the operations directory.

Tool:

Database Manager's Tool

- Copy "EOC" defined Page/Room to "CM" Directory.
- Data Mover "IST" defined Page/Room to "CM" Directory.

Step 9: Page/Room Ready to be Used Operationally by the EOC

FOT DB Manager certifies the Page/Room for operational use. At this point the Pages/Rooms are ready to be used only by the "EOC" personnel (workstations).

Tool:

Control Window

- Select Room Buttons
- Select Room from the Rooms Selection Dialog
- Select Page from Windows Selection dialog
- Enter a directive to activate a Room/Page

Step 10: FOT DBA Distribute Pages/Rooms to IST(s)

FOT DB Manager distributes the Pages and Rooms to all the IST(s).

Tool:

Database Manager's Tool

- Copy "EOC" defined Page/Room to "IST(s)" Directory.

Report:

New Pages/Rooms

- List of New Pages
- List of New Rooms

Step 11: Page/Room Ready to be Used Operationally by the IST(s)

At this point the Pages/Rooms are ready to be used by everyone, including the "IST(s)".

Tool:

Control Window

- Select Room Buttons
- Select Room from the Rooms Selection Dialog
- Select Page from Windows Selection dialog
- Enter a directive to activate a Room/Page

3.7.5 Activity Phase Tools & Reports Summary

The following list is a summary of the FOS provided tools and reports identified in this scenario:

a. Scheduling
   1. Tools

      n/a
   2. Reports

      n/a

b. Real-Time
   1. Tools
      (a) Display Builder
      (b) Control Window
   2. Reports
      (a) Validation Error Report
      (b) Page/Room Listing
      (c) New Page/Room Report

c. Analysis
   1. Tools
      (a) Database Manager's Tool
   2. Reports

      n/a

d. Miscellaneous

1. Tools

   n/a

2. Reports

   (a) CCB Approved Page/Room Sign-off Sheet

3.8 SSR Playback Management Scenario

3.8.1 Description

This scenario describes Solid State Recorder (SSR) Playback Management. The SSR is the science data storage device. The Flight Operations Team goal is 100% data capture. The SSR stores 140 Gbits of science data and greater than 384 Mbits (4 orbits) of House-Keeping telemetry for playback. The average playback time is 6 minutes (Full SSR requires 17 minutes to dump). The SSR is capable of simultaneously recording and playing back. There are currently five SSR Buffers defined on the AM-1 spacecraft. The five buffers are designated as: LRS (Low Rate Science) [CERES, MOPITT, HK (House Keeping), Ancillary], MISR, MODIS, ASTER and TRASH.

Figure 3.8.1-1 is a SSR Playback Management Data Flow Diagram that identifies the Flight Operations Team role within the EOS Operations Center (EOC). Also shown are external elements and the major data flows between the EOC and these elements.

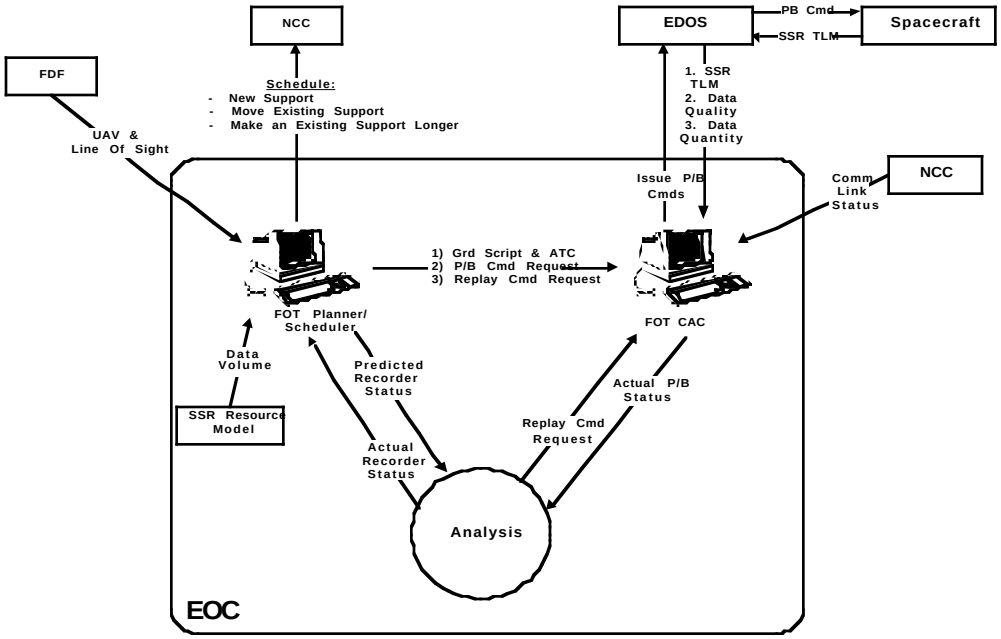

Figure 3.8.1-1. SSR Playback Management

Figure 3.8.1-2 is a SSR Flow Chart. It shows the FOT will Playback the SSR every support. If an anomaly occurs during the support the role of the FOS Analysis Subsystem is explain. If the anomaly can not be resolved during the contact. Analysis determines what to needs to be done to resolve SSR problems. Planning and Scheduling determines if a buffer overflow will occur due to SSR problems, and notifies Analysis.

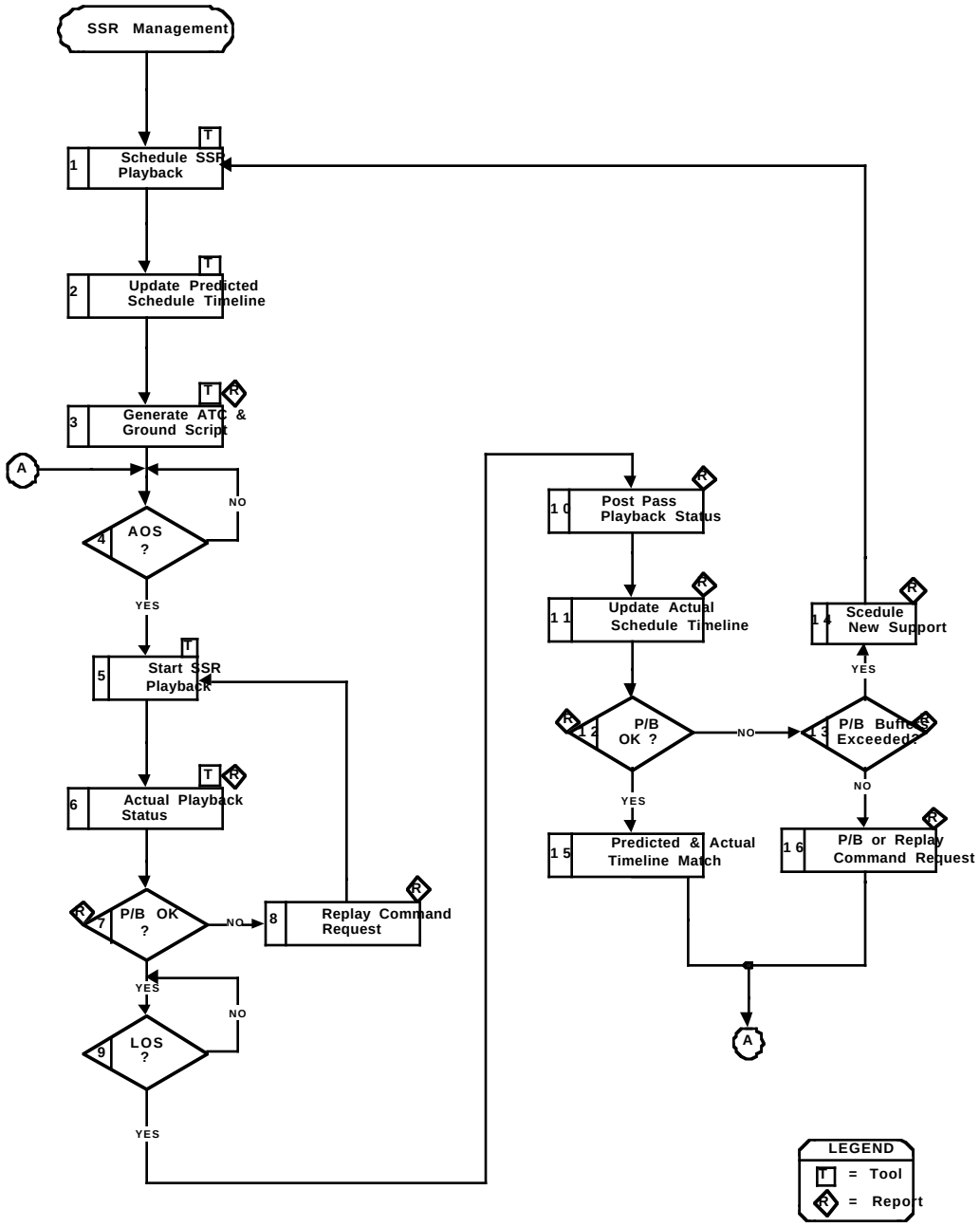

Figure 3.8.1-2. SSR Flow Chart

3.8.2 Use/How Often

The FOT will Playback the SSR during every communication contact (14/day).

3.8.3 Assumptions / Pre-requisites

- FDF will provide valid User Antenna Views (UAV) and Line Of Sight files.
- FOS Analysis: If possible will resolve playback anomaly during the support.

3.8.4 Detailed Description

This section provides a step-by-step description of the Solid State Recorder (SSR) Flow Chart (Fig. 3.8.1-2). The flow chart shows the management of the SSR. It shows the activities that occur before Acquisition Of Signal (AOS) during a Support (S/C Contact) and after Loss Of Signal (LOS). It shows the normal flow as well as two anomaly branches. Analysis is responsible for the resolution of SSR anomalies.

Step 1: Schedule SSR Playback

The Scheduler determines the contacts based on the In-view periods sent by FDF, the SSR data volumes (Resource Model), and the timing requirements for scheduling contacts.

Tool:

Communication Contact Scheduler

- Enter Start Time
- Enter Stop Time
- Press "SCHEDULE"

Step 2: Update Predicted Scheduling Timeline

Contacts and SSR Buffers for each Instrument are viewed on the "EOC Master Timeline". Once everything as been validated FOS Scheduling sends the following information to Analysis: AOS times, time when playback of each buffer ended, the data volume at the playback ending time for each buffer, and SSR Pointers prediction at start of contact.

Tool:

EOC Master Timeline

- Use scroll bar to maneuver
- Observe TDRS Supports
- Observe SSR Buffer Plot

Step 3: Generate ATC & Ground Script

The FOT Scheduler will enter the desired Detailed Activity Schedule (DAS) Start Time and DAS Stop Time. This will initiate the generation of the DAS, Ground Script and Absolute Time

Command(ATC) load. The FOT will verify that the DAS and Ground Script contain the SSR Commands, Start Of Playback, Duration of Playback, and Predicted SSR Counters at beginning of contact.

Tool:

CMS PS Interface

- Enter DAS Start Time and Stop Time
- Press Release
- Generate DAS
- Generate ATC Load
- Generate Ground Script

Report:

Detailed Activity Schedule Report

- SSR Commands
- Communication Commands

Ground Script Report

- SSR Playback Commands (start of playback)
- SSR Playback Length (time to dump)
- SSR Counters Predict at start of Contact

ATC Report

- Communication Commands

Step 4: Acquisition Of Signal (AOS)

Start of the Communication Contact.

Step 5: Start SSR Playback

The FOT Command Activity Controller (CAC) will manipulate the Ground Script using the Command Control Display window. The Command Control Display window will remain up for the entire support (CAC User Station). The Active Ground Script will contain the SSR Playback Commands.

Tool:

Command Control Display

- Executes the Ground Script

Step 6: Actual Playback Status

The FOT (Spacecraft Evaluator & Command Activity Controller) will monitor the SSR Playback and Communication Link Status. This will include: Difference between:

- the Predicted SSR Counter (Playback and Record) and the Actual SSR values.
- the Predicted Playback Start Time versus the Actual Playback Start Time.
- the Predicted Playback Duration versus the Actual Playback Duration.

The FOT will also monitor the Playback Clock Present (No data lost if clock not present) telemetry. Final the FOT will monitor the EDOS Data Quality , Data Quantity and the NCC Communication Link Status ground telemetry. This will be accomplished by evaluating the pre-defined SSR display, graph, table and the Event History Display. Necessary print-outs will be generated and filed.

Tool:

Page Display

- Call up SSR Display
- Send Hard copy to Printer if anomaly

Graph Display

- Call up SSR Graph
- End of Support, Send Hard copy to Printer if anomaly

Table Display

- Call up SSR Table (Spreadsheet)
- End of Support, Send Hard copy to Printer if anomaly

Event History Display

- Observe Command Failures
- Observe Forward Link Status
- Observe Return Link Status

Report:

Hard copy of SSR display page as required.

Step 7: Playback OK?

If yes continue with support until Loss Of Signal (LOS). If no and there is enough time left in the support, send the Analysis generated SSR Replay Command for partial/full replay.

Report:

SSR Command Request

- SSR Replay Command Procedure
- Parameters from Analysis, Replay Counters (Start and Stop)

- Replay Duration

Step 8: Replay Command Request

During the support Analysis will be monitoring the SSR Playback and Communication Link Status. Analysis will use the following information to determine if there is a SSR Playback Anomaly:

- Predicted Recorder Information from Scheduling
- SSR Real-Time Telemetry (REC & PB Counter, PB Clock Present)
- EDOS Data Quality , Data Quantity
- the NCC Communication Link Status ground telemetry .

If an anomaly occurs, then Analysis will do a SSR Buffer Location versus Time of Dump Correlation. Based on the results, Analysis will determine the Replay Buffer Location. Next, Analysis will generate a Command Request which will contain the appropriate Replay Commands. Finally, Analysis will submit the Command Request to the FOT CAC for execution.

Report:

SSR Command Request

- SSR Replay Command Procedure
- Parameters from Analysis, Replay Counters (Start and Stop)
- Replay Duration

Step 9: Loss of Signal

End of the Communication Contact.

Step 10: Post Pass Playback Status

After every communication contact Analysis will provide to Scheduling the actual (as-flown) information pertaining to the amount of data that exists on the SSR, the time that it was played back, and the communication contact times for the playbacks.

Report:

Post Pass SSR Playback Status

- Actual SSR buffer data
- Actual Time of Playback
- Actual communication contact times for the playbacks

Step 11: Update Actual Scheduling Timeline

The "EOC Master Timeline" SSR Plot will be updated once Scheduling receives the Post Pass SSR Playback Status Report from Analysis.

Tool:

EOC Master Timeline

- Use scroll bar to maneuver
- Observe TDRS Supports
- Observe SSR Buffer Plot

Step 12: Playback OK?

If yes Predicted and Actual (as-flown) Timelines should match. Analysis will determine: a new support, move existing support closer, or request making an existing support longer. Recommendation is sent to FUI, for display the operators.

Report:

SSR Playback Error Report

- Type of Error

Step 13: Playback Buffers Exceeded?

If yes, a Buffer Overflow Warning should be issued and a new support scheduled. If yes, the appropriate parameters should be calculated for either a Replay or Playback for the next Real-Time Support(s).

Note: It make take more than one Real-Time Support to recover from the SSR anomaly.

Report:

SSR Playback Buffer Overflow Report

- How much
- Which buffers

Step 14: Schedule New Support

One or more of the SSR Buffers will Overflow if the FOT continues with the current Ground Script. A SSR Command Procedure to Replay/Playback the SSR will not work because the upcoming contact (nominal 10 minutes) is not long enough. Therefore, the FOT Scheduler needs to schedule one of the following, based one the recommendation of Analysis:

- New Support
- Move Existing Support Closer
- Make an Existing Support Longer

Note: If none of the three above can be accomplished, then the Instrument Team(s) in which the Buffer(s) will be overwritten must be notified. They will inform the FOT to either turn the Overwrite Flag ON or OFF.

Step 15: Predicted & Actual (as-flown) Timeline Match

The Predicted and Actual SSR Buffer plots match, therefore continue with next support as planned.

Step 16: Playback or Replay Command Request

Based on comparing the Predicted and Actual SSR information Scheduling will determine the Replay/Playback Buffer Location. Next, Analysis submits a Command Request which contains the appropriate REPLAY / PLAYBACK commands.

Note: It make take more than one Real-Time Support to recover from the SSR anomaly.

Report:

SSR Command Request

- SSR Replay/Playback Command Procedure
- Parameters from Scheduling, Replay/Playback Counters (Start and Stop)
- Replay/Playback Duration

3.8.5 Activity Phase Tools & Reports Summary

The following list is a summary of the FOS provided tools and reports identified in this scenario:

a. Scheduling
   1. Tools
      (a) EOC Master Timeline
      (b) CMS PS Interface
   2. Reports
      (a) Detailed Activity Schedule Report
      (b) Ground Script Report
      (c) ATC Report
      (d) SSR Command Request
      (e) SSR Playback Error Report
      (f) SSR Playback Buffer Overflow Report

b. Real-Time
   1. Tools
      (a) Command Control Display
      (b) Page Display
      (c) Graph Display
      (d) Table Display

(e) Event History Display

2. Reports

(a) Hard copy of SSR display page

c. Analysis

1. Tools

n/a

2. Reports

(a) Post Pass SSR Playback Status

3.9 Spacecraft Activity Log Management Scenario

3.9.1 Description

This scenario describes Activity Log Management. The Spacecraft Control Computer (SCC) maintains an activity log used by all SCC resident software for detailed logging of events, status, and error conditions. The contents of the activity log are trickled down in the H/K telemetry stream and can also be downlinked in its entirety on the diagnostic channel upon ground command.

Figure 3.9.1-1 is an Activity Log Management Data Flow Diagram that identifies the Flight Operations Team role within the EOS Operations Center (EOC). Also shown are external elements and the major data flows between the EOC and these elements.

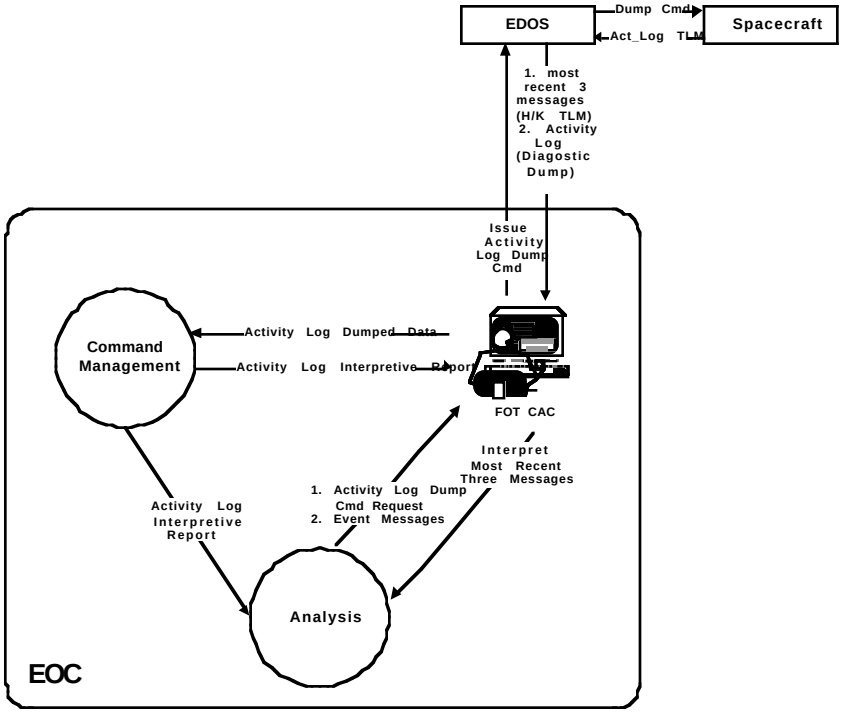

Figure 3.9.1-1. S/C Activity Log Management

Figure 3.9.1-2 is a Activity Log Flow Chart. It shows the FOT will dump the activity log any time there are missing messages. If a suspicious message occurs during the support the role of the FOS Analysis Subsystem is explain.

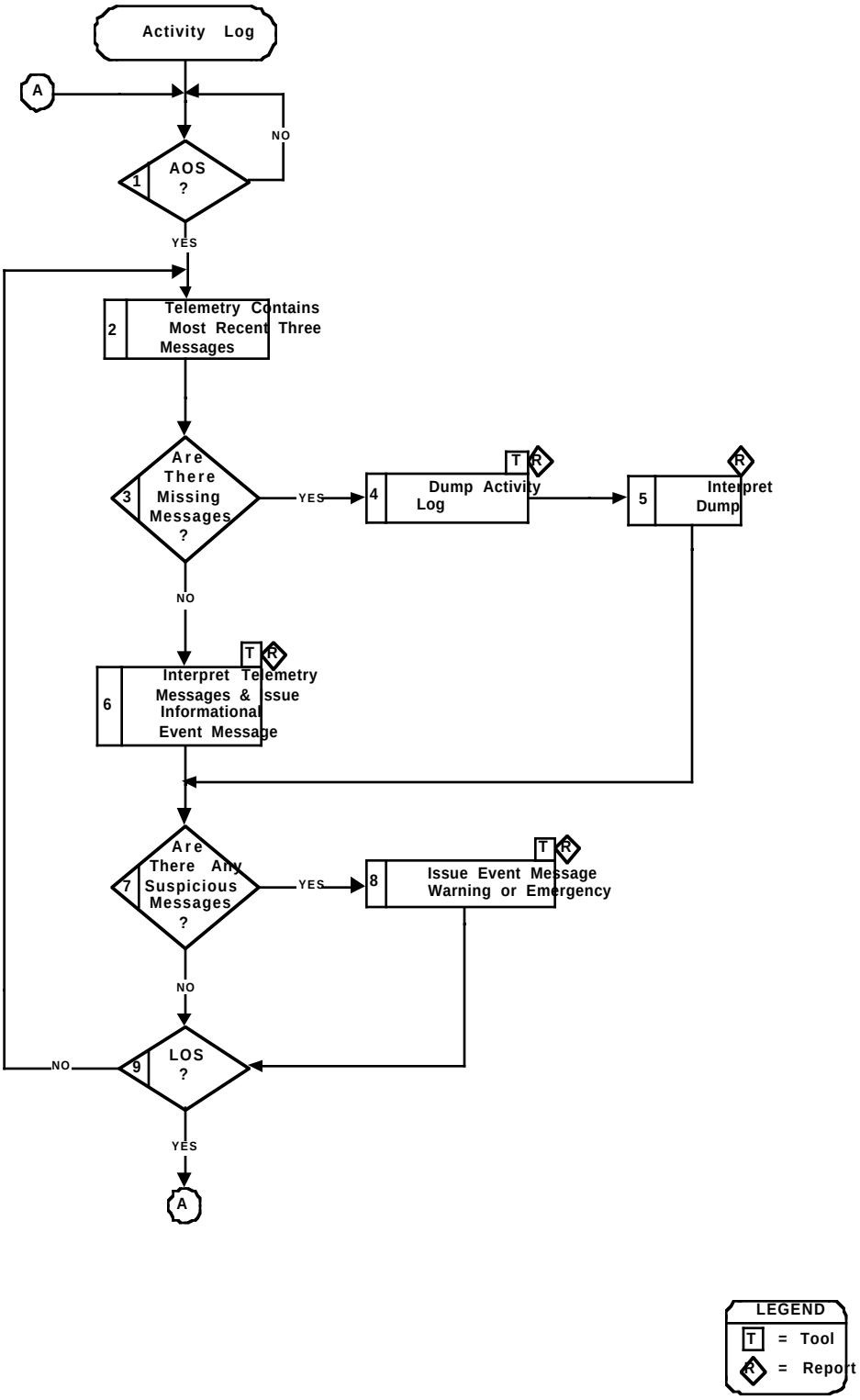

Figure 3.9.1-2. Activity Log Flow Chart

3.9.2 Use/How Often

The FOT will analyze the Activity Log Messages every communication contact (28/day).

3.9.3 Assumptions/Pre-requisites

- Activity Log FOS software is available during every real-time contact.

3.9.4 Detailed Description

This section provides a step-by-step description of the Spacecraft Activity Log Flow Chart (Fig. 3.9.1-2). The flow chart shows the management of the Activity Log. It shows the activities that occur before Acquisition Of Signal (AOS) during a Support (S/C Contact) and after Loss Of Signal (LOS). It shows the normal flow as well as two decision branches. One type of decision branch will be handled by the FOS Analysis Subsystem the other by the Command Management Subsystem.

Step 1: Acquisition Of Signal (AOS)

Start of the Communication Contact.

Step 2: Telemetry Contains Most Recent Three Messages

The three most recent activity log messages are trickled down in the housekeeping telemetry stream.

Step 3: Are There Missing Messages?

The EOC will monitor the housekeeping telemetry and provide notification if parts of the spacecraft activity log are inaccessible to the FOT via the housekeeping telemetry stream.

Step 4: Dump Activity Log

The EOC will, in the event parts of the spacecraft activity log are inaccessible, generate a command request for downlink of the spacecraft activity log.

Tool:

Command Control Display

- Executes the Activity Log Dump Command Request.

Command Request

- Submits the Activity Log Dump Command Procedure.

Report:

Activity Log Dump Command Request

- Activity Log Dump Command Procedure

Step 5: Interpret Dump

The EOC will use an activity log decoder to decode the diagnostic data dumped and display the contents of the SCC's activity log.

Reports:

Activity Log Interpretive Report (300 Messages)

- Pointer
- Days / Milliseconds of Day
- Message ID
- Message Data
- Message Description

Activity Log Cumulative Report (All Messages since Launch)

- Pointer
- Days / Milliseconds of Day
- Message ID
- Message Data
- Message Description

Activity Log New Messages Report (New Messages since last Dump)

- Pointer
- Days / Milliseconds of Day
- Message ID
- Message Data
- Message Description

Step 6: Interpret Telemetry Messages & Issue "Informational" Event Message

The EOC will use an activity log decoder to decode the most recent three messages and display the contents of the messages by issuing an "Informational" Event Message.

Tool:

Event History Display

- Observe "Informational" Event Message

Report:

EOC Event Message

- "Informational"
- Pointer

- Days / Milliseconds of Day
- Message ID
- Message Data
- Message Description

Step 7: Are There Any Suspicious Messages?

The EOC will examine the telemetry steam and diagnostic data interpretive report, and notice any suspicious messages.

Step 8: Issue Event Message "Warning " or "Emergency"

The EOC will issue an event message (Warning or Emergency) warning the FOT of any suspicious message.

Tool:

Event History Display

- Observe "Warning" or "Emergency" Event Message

Report:

EOC Event Message

- "Warning" or "Emergency"
- Pointer
- Days / Milliseconds of Day
- Message ID
- Message Data
- Message Description

Step 9: Loss of Signal

End of the Communication Contact.

3.9.5 Activity Phase Tools & Reports Summary

The following list is a summary of the FOS provided tools and reports identified in this scenario:

a. Scheduling

1. Tools

   n/a

2. Reports

   (a) Activity Log Interpretive Report

b. Real-Time

1. Tools
   (a) Command Control Display
   (b) Command Request
   (c) Event History Display
2. Reports
   n/a

c. Analysis
1. Tools
   n/a
2. Reports
   (a) EOC Event Message

3.10 Configuration Management Relative Time Command Sequence (RTCS) Scenario

3.10.1 Description

This scenario describes Configuration Management of RTCS(s). RTCS(s) can be defined by anyone (RTS Load Builder). There are 128 RTCS buffers located in the SCC on AM-1 the spacecraft. Each RTCS buffer can contain up to 16 commands. RTCS(s) are used to perform the same spacecraft activity on a routine basis. The advantage of defining RTCS(s), is that a single command may be used to initiate the distribution of the commands contained in the RTCS. RTCS(s) are initiated by one of the following: absolute time command, real-time command, or a telemetry monitor. Execution of commands within an RTCS(s) is based on the relative time between each command.

Figure 3.10.1-1 is a Configuration Management RTCS Data Flow Diagram that identifies the Flight Operations Team role within the EOS Operations Center (EOC). Also shown are external elements and the major data flows between the EOC and these elements. The EOC will receive RTCS(s) from the spacecraft contractor, the PIs , the FOT, and etc.

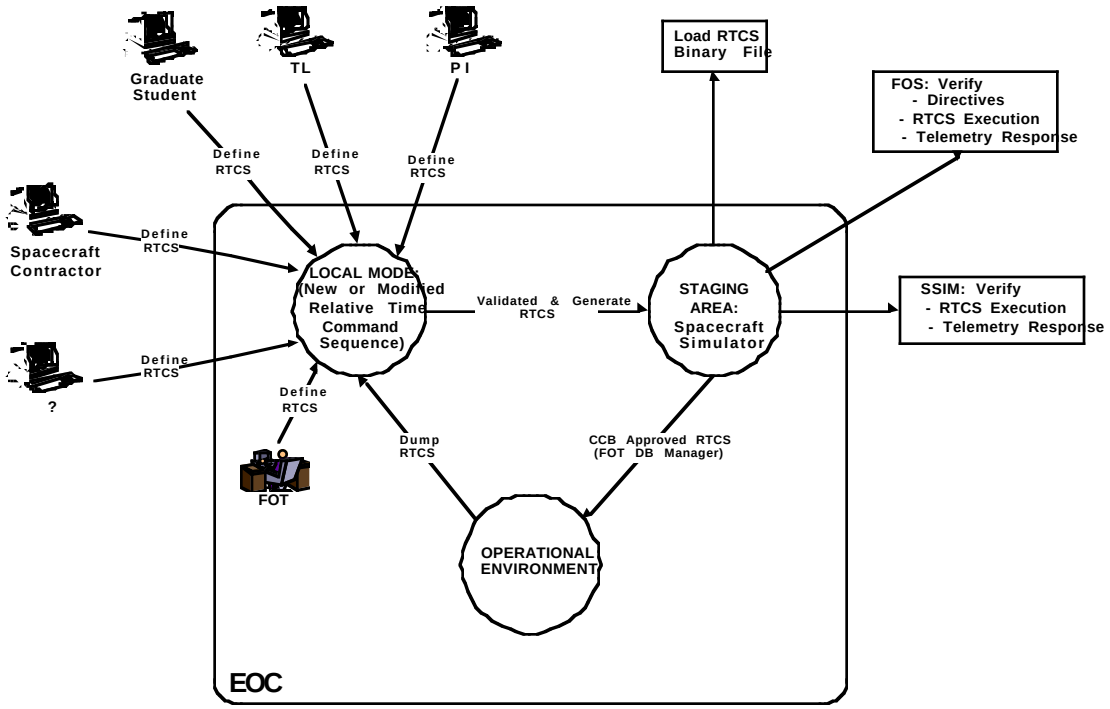

Figure 3.10.1-1. Configuration Management - RTCS

Figure 3.10.1-2 is a RTCS Flow Chart. It shows that people will create, validate and test new RTCS(s) in their own "Local" directory. Once a RTCS has been approved by the CCB it will be copied to the "Operational" directory by the FOT.

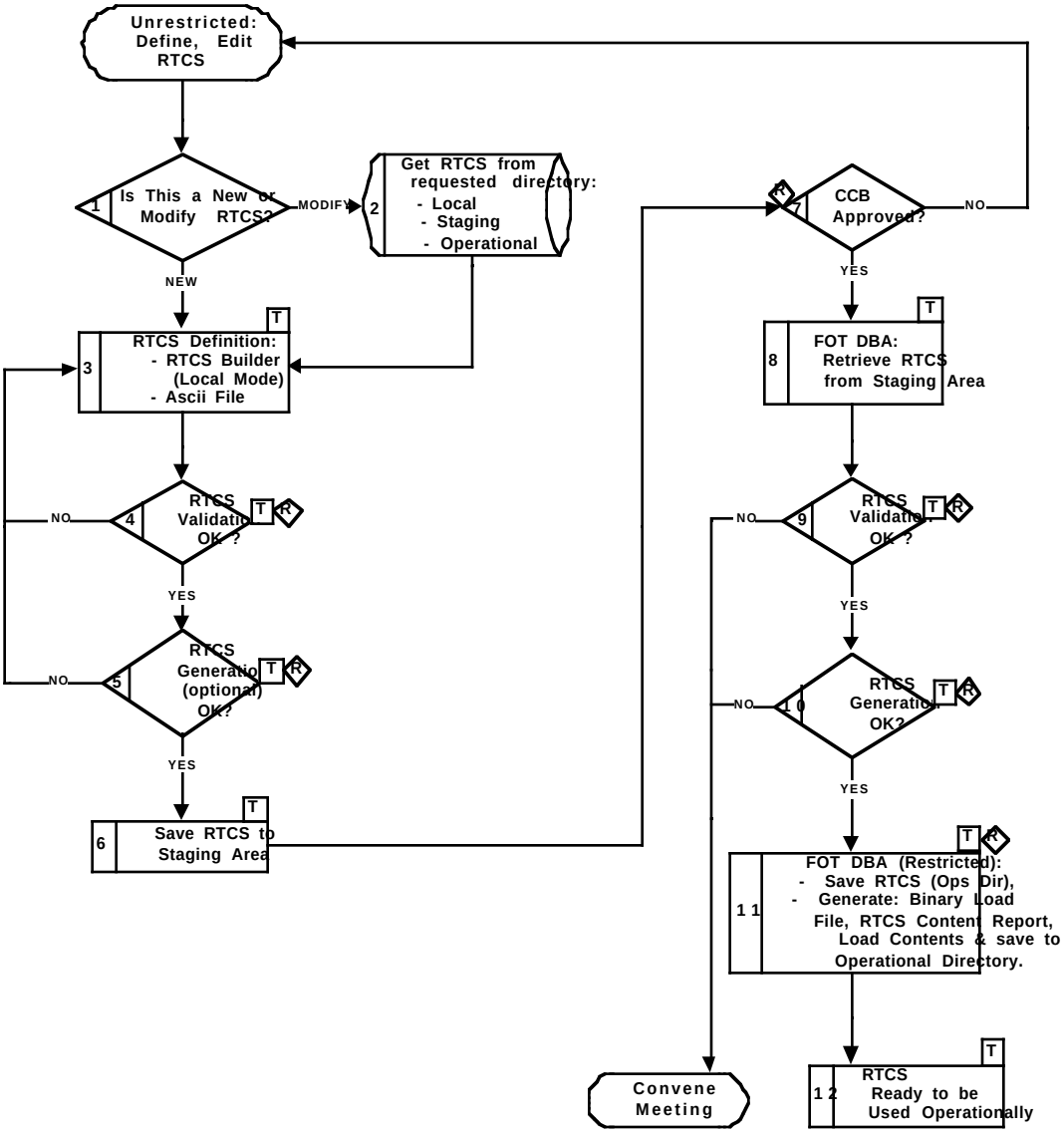

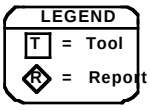

Figure 3.10.1-2. RTCS Flow Chart

3.10.2 Use/How Often

The FOT will use RTCS(s) daily to perform the same spacecraft activity on a routine basis.

3.10.3 Assumptions / Pre-requisites

- Instrument RTCS(s) will be written by the Instrument Contractors and FOT.
- Spacecraft RTCS(s) will be written by the Spacecraft Contractor and FOT.

3.10.4 Detailed Description

This section provides a step-by-step description of the RTCS Flow Chart (Fig. 10-2). The flow chart is broken into two parts. The Test Environment has unrestricted access and is used to define new RTCS, modify existing RTCSs, validate and constraint check RTCSs and finally (if appropriate) test the RTCSs against the spacecraft simulator before submitting them to the CCB. Once a RTCS has been approved by the CCB it is copied by the FOT into the Operational Environment (access restricted to the FOT). At this point the RTCS is re-validated and re-constraint checked. Finally, after passing all checks the RTCS can be loaded to the spacecraft and used operationally by the FOT.

Step 1: Is This a New or Modified RTCS?

If this is a new RTCS , then go to step 3 and create a new RTCS. Else, retrieve existing RTCS from requested directory.

Step 2: RTCS from requested directory

Get RTCS from one of the following directories: Local, Staging, or Operational.

Step 3: RTCS Definitions

The RTS Load Builder Tool (windows) can be used to create new RTCSs or modify existing RTCSs that exist in the test directory. The advantage of using windows is that it has pull down menus for command mnemonics (interactive). A person can also create a RTCS using any ASCII editor. Next, the RTCS is copied into the their own local directory. At this point the RTCS can be imported into the RTS Load Builder Tool.

Tool:

RTS Load Builder

- Enter Command Mnemonics
- Enter Relative Times
- etc.

Step 4: Validation OK?

If the validation indicator box is selected the RTCS is syntax checked, which verifies that the command mnemonics exist in the PDB. Next the RTCS is command constraint checked.

Tool:

RTS Load Builder

- Press the Validation indicator box
- FUI Syntax check RTCS
  - Validate each command against the PDB
- Send procedure to CMS for validation, Constraint check each command
  - Verify command order
  - Verify command spacing (time between commands)
  - Check soft constraints (can be allowed to remain in procedure)
  - Check hard constraints (can not be violated)
  - etc.

Report:

Syntax Error Report

- Type of error
- Number of errors

Validation Error Report

- Type of error
- Number of errors

Step 5: RTCS Generation (optional) OK?

If the generate indicator box is selected, everything in step 4 plus a Binary Load File and RTS Content Report is created. This step is optional because it should only be done if the FOT plans on running the RTCS against the Spacecraft Simulator.

Tool:

RTS Load Builder

- Press Generate indicator box
- etc.

Report:

Generate Error Report

- Type of error (soft, hard)
- Number of errors

Step 6: Save RTCS to Staging Area

Once the RTCS has passed Validation, and Constraint Checking the user will save the RTCS to the Staging Area.

Tool:

Spacecraft Simulator Menu (only use if do step 5)

- Boot
- Initiate Software
- Select Scenario (Launch, Early Orbit, Normal Ops, Day, Night)
- Connect to FOS String
- etc.

Report:

RTCS Listing

- New RTCS
- Old RTCS with redlines (if applicable)
- CCR, Submit to CCB

Step 7: Configuration Control Board (CCB) Approved?

Once the RTCS has past the above steps (checks) the originator fills out a CCR and submits it to the CCB. If the CCB approves the RTCS, then the FOT Database Manager will copy it to the operational directory. If the RTCS is not accepted a redline copy will be given back to the originator. The CCB members will include: Spacecraft Manager, Ground System Manager, Flight Ops Manager, NASA Representative.

Report:

CCB Approved RTCS Sign-off Sheet

- New RTCS
- Old RTCS with redlines (if applicable)
- CCR, Submitted to CCB

Step 8: FOT DBA Retrieve RTCS from Staging Area

The FOT Database Manager will retrieve the CCB approved RTCSs from the Staging Area. Once retrieved the FOT DB Manager will re-validate and re-constraint check the RTCS.

Note - all the checks should pass since all the checks were performed in the test environment prior to submitting the RTCS to the CCB.

Tool:

Database Manager's Tool

- Search for RTCS Filename in the Staging Area.

Step 9: Validation OK?

FOT DB Manager performs. Same as Step 4.

Step 10: RTCS Generation OK?

FOT DB Manager performs. Same as Step 5.

Step 11: Save RTCS to Operations Directory

Once the RTCS has passed Validation, and Generation the FOT Database Manager will save the Procedure to the operations directory.

Tool:

Database Manager's Tool

- Copy RTCS Filename From Staging Directory to Ops Directory.

Step 12: RTCS Ready to be Used Operationally

FOT DB Manager certifies the RTCS for operational use.

Tool:

RTS Buffer Display Window

- Display map of the RTCS buffers.

RTS Command Window

- Enabled by double clicking a buffer in the RTS Buffer Display window

3.10.5 Activity Phase Tools & Reports Summary

The following list is a summary of the FOS provided tools and reports identified in this scenario:

a. Scheduling
   1. Tools
      (a) FUI - RTS Load Builder
   2. Reports
      (a) FUI - Syntax Error Report
      (b) CMS - Validation Error Report
      (c) CMS - Generate Error Report
      (d) RTCS Listing
b. Real-Time
   1. Tools
      (a) RTS Buffer Display Window

(b) RTS Command Window

2. Reports

n/a

c. Analysis

1. Tools

(a) Database Manager's Tool

2. Reports

n/a

d. Miscellaneous

1. Tools

(a) Spacecraft Simulator Menu

2. Reports

(a) CCB Approved RTCS Sign-off Sheet

3.11 Real-Time Operations

3.11.1 Description

This section describes a nominal real-time operation scenario. Inputs to this scenario include ground scripts and spacecraft and instrument loads that are produced by the Command Management. Loads for each spacecraft and its instruments are available at the EOC for uplink approximately 24 hours in advance. The EOC ground scripts include steps to: uplink the loads; to dump the spacecraft recorders; and ground directives.

Figure 3.11.1-1 is a Real-Time Data Flow Diagram that identifies the Flight Operations Team role within the EOS Operations Center (EOC). Also shown are external elements and the major data flows between the EOC and these elements. The Operations Controller leads the shift operations for all spacecraft. Responsibilities include: briefings and debriefings; monitoring activity timeline; coordinating institutional interfaces (i.e. NCC, FDF, EDOS); coordinating real-time scheduling changes; approving real-time commanding; and anomaly resolution.

Concurrent operations of multiple spacecraft are handled by multiple Command Activity Controller/Spacecraft Evaluator and Instrument Evaluator teams. A given team need not be dedicated to a single spacecraft, but can instead support any given spacecraft for a period of time (e.g. a contact or a shift).

The EOC ingests both real-time and spacecraft recorded data. Real- time data refers to data that is acquired and transmitted immediately to the ground. Delays in real-time data are limited to the actual time of transmission. Spacecraft recorded data refers to data that has been stored on-board the spacecraft for delayed transmission to the ground.

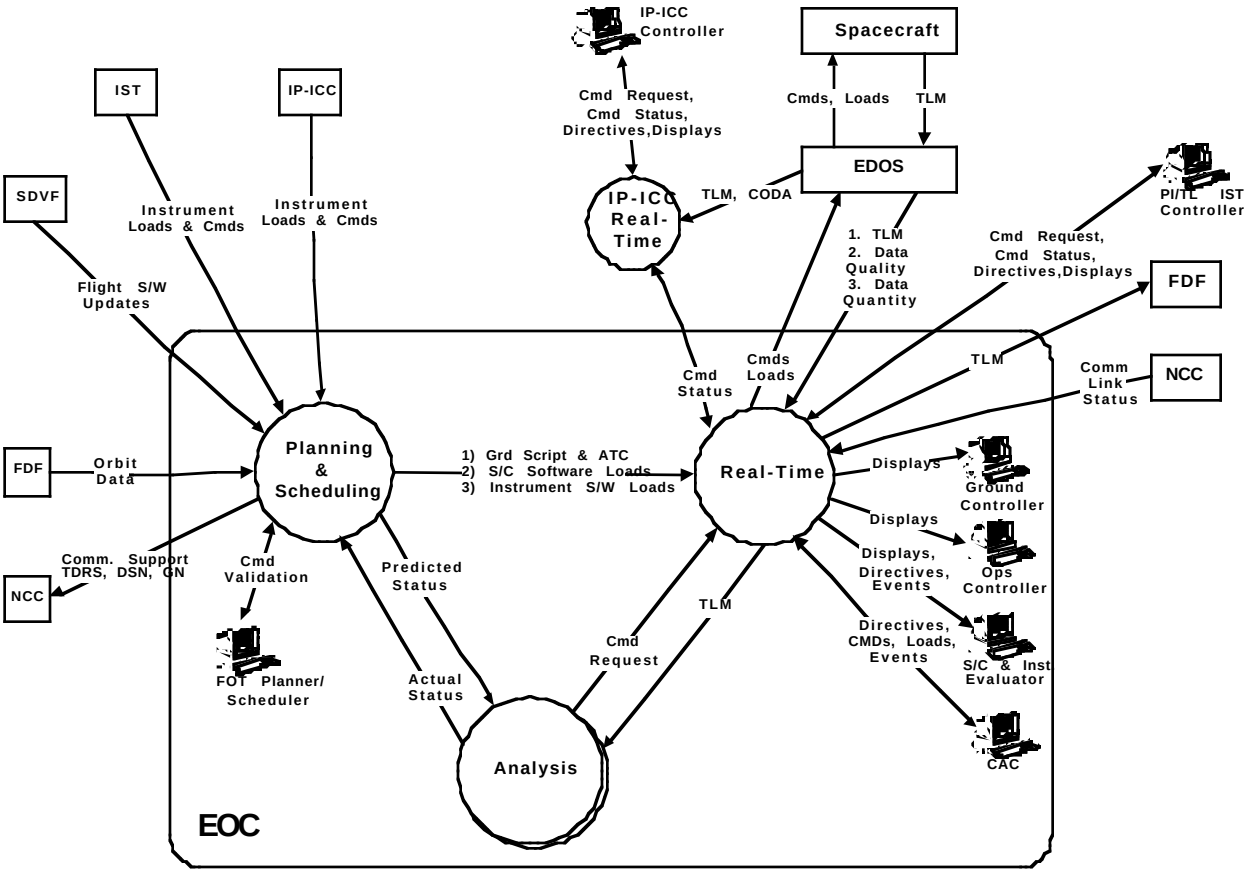

Figure 3.11.1-1. Real-Time Operations

Figure 3.11.1-2 is a Real-Time Flow Chart. It shows tasks the FOT will perform during pre-contact, contact and post-contact.

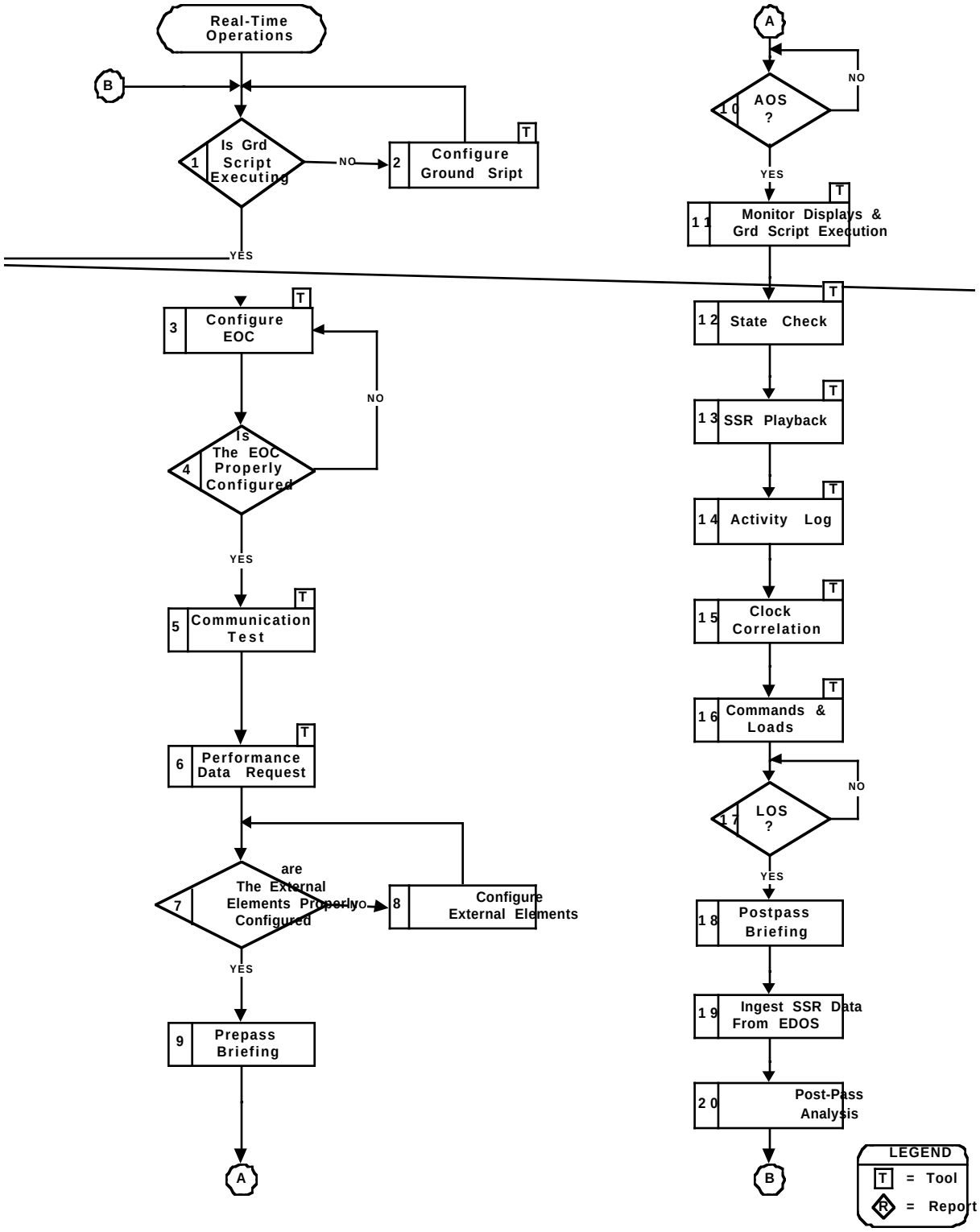

Figure 3.11.1-2. Real-Time Flow

3.11.2 Use/How Often

For AM-1 the FOT will perform 28 nominal real-time contacts per day.

3.11.3 Assumptions/Pre-requisites

- Ground Script has been generated for the current day.
- SCC and Instrument micro-processor loads have been generated for uplink.
- FDF load files have been generated for uplink.

3.11.4 Detailed Description

This section provides a step-by-step description of the Real-Time Operations Flow Chart (Fig. 3.11.1-2). It shows the activities that occur before Acquisition Of Signal (AOS) during a Support (S/C Contact) and after Loss Of Signal (LOS).

PRE-CONTACT

Step 1: Is The Ground Script Executing

The FOT Command Activity Controller (for a given spacecraft and its instruments) makes sure the current day EOC ground script is executing correctly. The EOC ground script consists of time stamped directives for the EOC to process the current day's contact periods. The ground script for a given spacecraft may only be initiated by the Command Activity Controller with command authority for that spacecraft (i.e. there is a single-point of command per spacecraft). The EOC ground script execution, for a given spacecraft, and its instruments is controlled by the Command Activity Controller and monitored by the Instrument Evaluator. The EOC executes ground scripts for multiple spacecraft concurrently and independently.

Step 2: Configure Ground Script

The Command Activity Controller (for a given spacecraft and its instruments) issues a directive that initiates the EOC ground script for that spacecraft and the current day.

Tool:

Command Control Display

- Directives to start the ground system.
  - Enter Start Time
  - Enter Stop Time

Step 3: Configure EOC

Prior to the scheduled contact for a designated spacecraft, the EOC ground script for that spacecraft performs the necessary setup for commanding, to ingest and process the real-time spacecraft and instrument housekeeping telemetry . This setup may include changes to limit sets, and EOC

ground equipment checkout. The FOT Command Activity Controller is responsible for verifying the pre-contact EOC configuration.

Tool:

Command Control Display

- Ground Script: Directives to configure EOC for upcoming support.

Step 4: Is The EOC Properly Configured

The Command Activity Controller issues directives that configure the EOC.

Step 5: Communication Test

Prior to the scheduled contact for a designated spacecraft, the EOC ground script issues a directive for sending a communication test message to EDOS and NCC.

Tool:

Command Control Display

- Ground Script: Directives for Comm. Test sent to EDOS & NCC.

Step 6: Performance Data Request

Prior to the scheduled contact for a designated spacecraft, the EOC ground script issues a performance data request directive to the NCC to turn on the ODM's.

Tool:

Command Control Display

- Ground Script: Directive sent to NCC to turn on ODMs.

Step 7: Are the External Elements Properly Configured

The FOT Operations Controller is responsible for verifying the pre-contact external elements ground configuration. The ground includes: FDF, ISTs Voice, Ebnet, WSGT (only if problem) and Ground Stations (Emergency support).

Step 8: Configure External Elements

The Operations Controller ask the external elements to configure for the upcoming support.

Step 9: Prepass Briefing

About five minutes prior to the pass, a prepass briefing (i.e., orbit number, transmission configuration, AOS and LOS times, activities) is broadcast by the FOT Operations Controller to entities on the SCAMA network. This includes the ISTs, and all other elements involved in the pass.

<u>CONTACT</u>

Step 10: Acquisition Of Signal (AOS)

Start of the Communication Contact.

Step 11: Monitor Displays & Ground Script Execution:

The Spacecraft Evaluator for a given spacecraft monitors telemetry displays providing information on the health and safety of that spacecraft and its subsystems. The Spacecraft Evaluator is notified of critical events such as missing data, bad quality, and limits violations.

The Instrument Evaluator at the EOC and the PI/TL at the IST monitors telemetry displays providing information on the health and safety of the instruments. The Instrument Evaluator is notified of critical events such as missing data, bad quality, and limits violations.

Tool:

Page Display

- Spacecraft
- Instrument

Graph Display

- Spacecraft
- Instrument

Table Display

- Spacecraft
- Instrument

Event History Display

- Observe Command Failures
- Observe Forward Link Status
- Observe Return Link Status

Step 12: State Check

Once the EOC is receiving good data quality housekeeping telemetry the State Check directive will be initiated by the ground script. The State Check is used by the FOT to assist in back-orbit command verification, the EOC will compare the spacecraft against its expected state. Mismatches will be evaluated by the FOT Spacecraft Evaluator during the support and appropriate action taken (send commands, call off-line personnel, etc.).

Tool:

Event History Display

- Observe Mismatches, determine criticality

Step 13: Solid State Recorder Playback

The SSR is the science data storage device. The Flight Operations Team goal is 100% data capture. The SSR will be played back during every real-time contact.

The FOT (Spacecraft Evaluator & Command Activity Controller) will monitor the SSR Playback and Communication Link Status. This will include: Difference between:

- the Predicted SSR Counter (Playback and Record) and the Actual SSR values.
- the Predicted Playback Start Time versus the Actual Playback Start Time.
- the Predicted Playback Duration versus the Actual Playback Duration.

The FOT will also monitor the Playback Clock Present (No data lost if clock not present) telemetry. Final the FOT will monitor the EDOS Data Quality , Data Quantity and the NCC Communication Link Status ground telemetry. This will be accomplished by evaluating the pre-defined SSR display, graph, table and the Event History Display. Necessary print-outs will be generated and filed.

Tool:

Page Display

- Call up SSR Display
- Send Hard copy to Printer if anomaly

Graph Display

- Call up SSR Graph
- End of Support, Send Hard copy to Printer if anomaly

Table Display

- Call up SSR Table (Spreadsheet)
- End of Support, Send Hard copy to Printer if anomaly

Event History Display

- Observe Command Failures
- Observe Forward Link Status
- Observe Return Link Status

Report:

Hard copy of SSR display page as required.

Step 14: Activity Log

The Spacecraft Control Computer (SCC) maintains an activity log used by all SCC resident software for detailed logging of events, status, and error conditions. The contents of the activity log are trickled down in the H/K telemetry stream and can also be downlinked in its entirety on the diagnostic channel upon ground command.

The Spacecraft Evaluator will evaluate the activity log messages during the contact.

The EOC software will monitor the housekeeping telemetry and provide notification if parts of the spacecraft activity log are inaccessible to the FOT.

In the event that part of the spacecraft activity log are inaccessible the EOC will generate a command request for downlink of the spacecraft activity log. Upon receipt of the dump the Spacecraft Evaluator will evaluate the missing messages for any critical errors.

Tool:

Command Control Display

- Executes the Activity Log Dump Command Request.

Report:

Activity Log Dump Command Request

Step 15: Clock Correlation

The Flight Operations Team (FOT) is responsible for: managing the spacecraft clock; keeping track of how much the spacecraft clock has drifted. The spacecraft clock is an oscillator which drifts in frequency over time. The clock will be maintained within $\pm$100 ms. Spacecraft clock values are used for spacecraft position and attitude calculations, antenna and instrument pointing references, and stored command execution.

The Clock will be updated either automatically by the ground script or manually by a command Request.

Tool:

Command Control Display

- Start Clock Update Command Procedure
  - Contains Master Oscillator Adjust Frequency.

Command Request

- Submits the Clock Update Command Procedure.

Step 16: Commands & Loads

During the contact for a given spacecraft, loads may be uplinked to that spacecraft either via the automated ground script or via a real-time directive entered by the Command Activity Controller.

The Spacecraft Evaluator and Command Activity Controller for a given spacecraft are notified of the uplink status and verify the execution of spacecraft commands.

The Instrument Evaluator at the EOC and the PI/TL at the IST are notified of the uplink status and the verification status of instrument commands. For AM-1, the loads are verified by examining a Cyclic Redundancy Check (CRC) status, which is included in the housekeeping telemetry. Real-

time commands are verified by examining the command verification status in the housekeeping telemetry.

Real-time commanding may be initiated by the Command Activity Controller via a directive or the ground script. The Command service performs the authorization check, validates the command, and uplinks the command via EDOS. The EOC uplinks real-time commands to multiple spacecraft concurrently and independently.

The Instrument Evaluator at the EOC and the PI/TL at the ISTs may request that a real-time command be uplinked during the contact. The Command Activity Controller may grant or deny this real-time command request. (Note: All command input from an IST, exclusive of instrument micro-processor loads, are in mnemonic form. Depending on the criticality of the command, concurrence from the EOC Command Activity Controller may be required prior to uplink.)

Tool:

Command Control Display

- Executes the Ground Script.

Command Request

- Used for non-planned events (commands, procedures, etc).

Step 17: Los Of Signal

End of the Communication Contact.

POST CONTACT

Step 18: Postpass Briefing

The postpass briefing (i.e., equipment malfunctions, spacecraft/instrument problems, communications problems) is broadcast by the FOT Operations Controller to entities on the SCAMA network. This includes the ISTs, and all other elements involved in the pass.

Step 19: Ingest SSR Data From EDOS

Following the contact for a given spacecraft, the ground script executes directives to enable the Telemetry service to ingest and process spacecraft recorded spacecraft and instrument housekeeping telemetry from EDOS. The spacecraft recorded telemetry is temporarily archived for local use by the Spacecraft Analysis service and permanently archived at the GSFC DAAC. The Spacecraft Evaluator verifies the successful completion of this operation.

Step 20: Postpass Analysis

An EOC trigger will be used to issue Spacecraft and Instrument trending Analysis requests for the playback data.

3.11.5 Activity Phase Tools & Reports Summary

The following list is a summary of the FOS provided tools and reports identified in this scenario:

a. Scheduling
   1. Tools

      n/a
   2. Reports

      n/a

b. Real-Time
   1. Tools
      (a) Command Control Display
      (b) Command Request
      (c) Event History Display
      (d) Page Display
      (e) Graph Display
      (f) Table Display
   2. Reports
      (a) Hard copy of displays as required.

c. Analysis
   1. Tools

      n/a
   2. Reports
      (a) EOC Event Message

3.12 Planning and Scheduling Scenario

3.12.1 Description

This scenario describes the planning and scheduling activities performed by the FOT in support of the AM-1 spacecraft. The FOT will use the Planning and Scheduling(PAS) and Command Management System(CMS) software tools for the generation of the Absolute Time Command(ATC) loads for the AM-1 Spacecraft.

Figure 3.12.1-1 is a Data Flow Diagram(DFD) that identifies the Flight Operations Team role in this scenario.

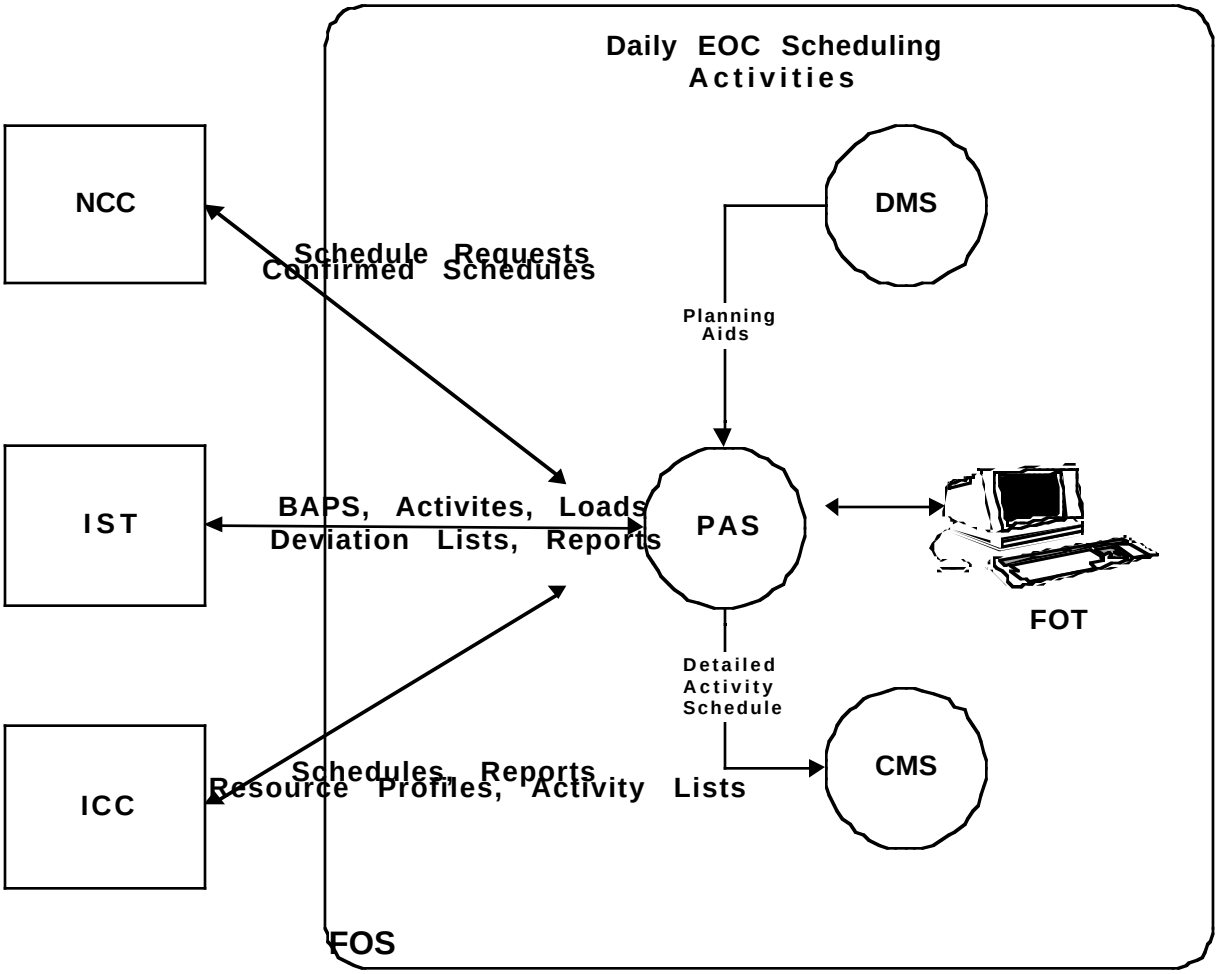

Figure 3.12.1-1. Daily EOC Scheduling Activities

Figure 3.12.1-2 is a Planning and Scheduling Flow Chart. It shows the FOT's functional usage of the FOS Planning and Scheduling software.

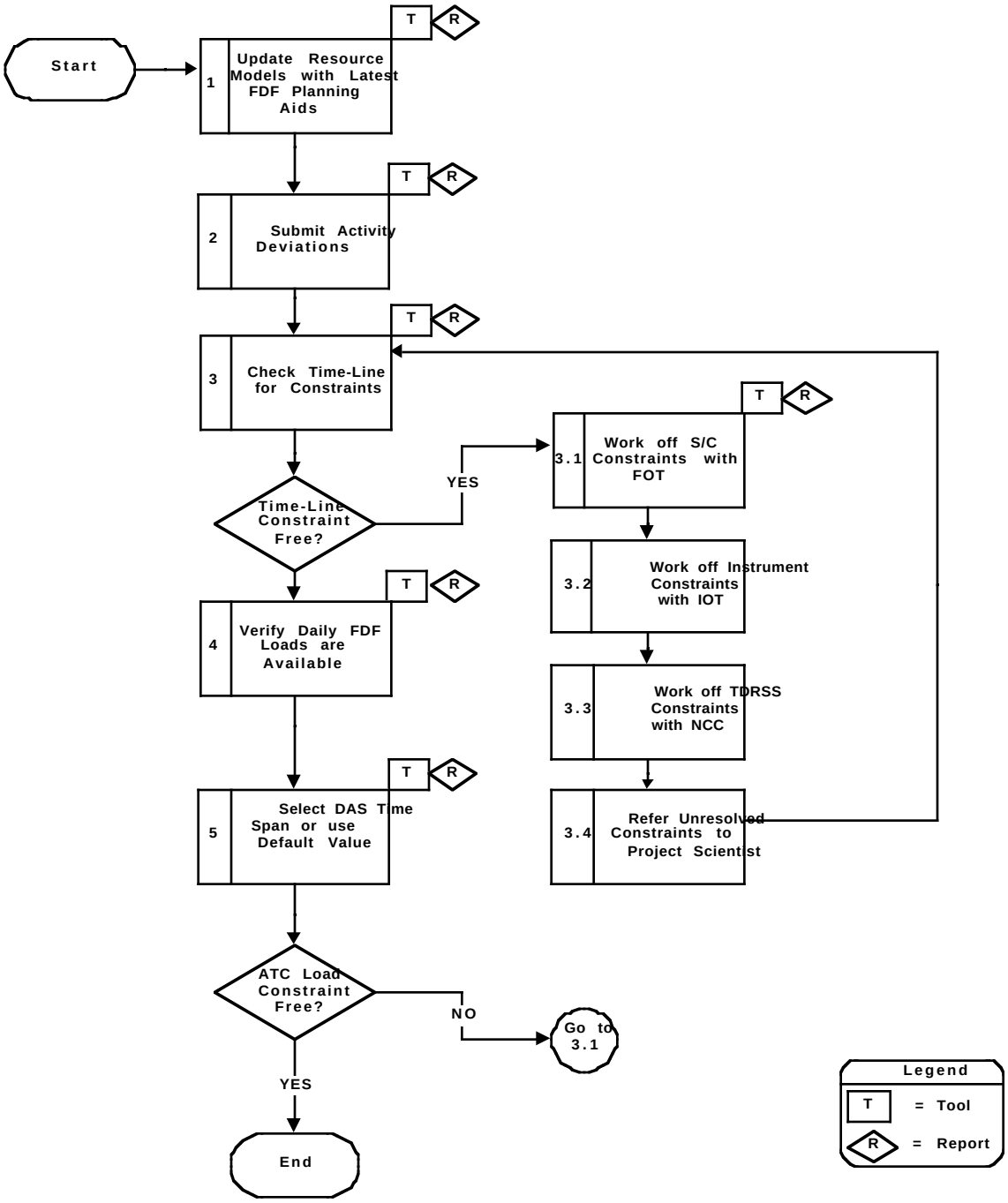

Figure 3.12.1-2. Daily Scheduling Flow Chart

3.12.2 Use/How Often

The tasks delineated in Figure 3.12.1-2 will be executed on a daily basis. Additional tasks such as the formulation of the NCC Forecast Schedule and the reception of the NCC Confirmed Schedule will be performed on a weekly basis.

3.12.3 Assumptions/Pre-requisites

ASTER will be using an IST, therefore, all IOTs will interface with the FOT via the IST.

3.12.4 Detailed Description

This section provides a step-by-step description of the Daily Scheduling Flow Chart (Figure 3.12.1-2).

Step 1: Uplink Scheduling

The FOT will initiate the Planning and Scheduling(PAS) Event Scheduler tool. This tool will execute as a batch process. The Data Management System(DMS) will receive all of the FDF products and initiate PAS processes to validate the FDF products. After successful validation, the Event Scheduler will ingest the required FDF products into the Resource Model and update all events and event based activities.

Tool:

Event Scheduler

- Batch Execution
- Resource Model Updated
- Orbital Events Updated
- Event based Activities Updated

Report:

Ephemeris Report

- Shows time span of FDF products ingested by Event Scheduler.

Step 2: Deviation Scheduling

The FOT will use the Activity Scheduler, Load Scheduler, and the Schedule Filter plus the timeline visualization tool to support late changes and modifications to the schedule.

Tools:

Activity Scheduler

- Add, delete, change time of command activities.

Load Scheduler

- Add, delete, change time of table load activities.

Schedule Filter - ASTER

- Add, delete, change time of ASTER activities.

TimeLine

- View timeline representation of scheduled activities.

Reports:

TimeLine Report

- ASCII report of TimeLine contents in time order.

Step 3: Check for Constraints

FOT will review the timeline for activity constraint violations.

Tools:

TimeLine

- View TimeLine representation of activities for constraints.

Reports:

TimeLine Report

- ASCII report of TimeLine contents in time order.

Step 3.1: Spacecraft Constraint Workoff

The FOT will modify the spacecraft actuates as required to remove any constraints detected by the system. Any spacecraft activities that either cause instrument constraints or are constrained by instrument activities will be resolved jointly by the FOT and the respective IOTs.

Tools:

TimeLine

- View TimeLine representation of activities for constraints.

Reports:

TimeLine Report

- ASCII report of TimeLine contents in time order.

Step 3.2: Instrument Constraint Workoff

The IOTs will jointly modify their actuates as required to remove any instrument constraints detected by the system. Any instrument activities that either cause spacecraft constraints or are constrained by spacecraft activities will be resolved jointly by the FOT and the respective IOTs.

Tools:

TimeLine

- View TimeLine representation of activities for constraints.

Reports:

TimeLine Report

- ASCII report of TimeLine contents in time order.

Step 3.2: TDRSS Constraint Workoff

The FOT will modify the TDRSS contact schedule as required to remove any constraints or possible data losses detected by the system with the PAS supplied Communications Contact scheduling tool. Resolving communications contact constraints or filling in for potential data losses may require an extensive amount of verbal coordination with the Network Control Center(NCC).

Tools:

TimeLine

- View TimeLine representation of activities for constraints.

Communications Contact Scheduler

- Add, delete, move, or extend TDRSS contact activities.

Reports:

TimeLine Report

- ASCII report of TimeLine contents in time order.

Step 3.4: Constraint Resolution

The FOT will notify the Project scientist of any inter-instrument or spacecraft - instrument constraints that they are unable to resolve for final resolution.

Tools:

TimeLine

- View TimeLine representation of activities for constraints..

Reports:

TimeLine Report

- ASCII report of TimeLine contents in time order.

Step 4: Verify FDF Loads Availability

The routine FDF loads for the spacecraft will be nominally scheduled for uplink via a BAP. The timeline will show all of the FDF loads scheduled but not yet created as a soft constraint, to remind the FOT that those loads will require generation as the data becomes available. The reporting of nonexistent yet scheduled loads is only for those loads scheduled by a BAP.

Tools:

TimeLine

- View TimeLine representation of activities for constraints..

Reports:

TimeLine Report

- ASCII report of TimeLine contents in time order.

Step 5: Select DAS Time Span

The FOT will use the PAS provided ATC Load Generation tool to select the end time of the DAS or choose the provided default time. This tool will the perform a "sanity" constraint check, where soft constraints will result in an alarm to the FOT and a DAS, a no DAS would be created if a hard constraint is detected. The DAS is sent to the Command Management System(CMS) Schedule Controller process for command level expansion and command level constraint check. Command level constraint violations will be reported to the FOT for resolution. If no command level constraints are detected, the ground scheduled will be updated.

Tools:

ATC Load Generation

- Enter DAS stop time or select default.

Reports:

DAS Report

- ASCII report of TimeLine contents in time order and detected constraints.

ATC Load Report

- Load name
- Load type
- Valid uplink period
- Uplink date and time
- Load size and bytes
- Starting and ending ATC buffer locations
- Execution times of the first and last commands
- Number of commands
- Number of critical commands
- List of control commands

Integrated Report

- Absolute Time commands to be executed
- Relative Time Commands to be executed

- Scheduled spacecraft contacts
- Real-time commands to be uplinked
- Loads to be uplinked
- Expected orbital events.

This page intentionally left blank

Abbreviations and Acronyms

AGS	ASTER Ground System
AM	Morning (ante meridiem) -- see EOS AM
ASTER	Advanced Spaceborne Thermal Emission and Reflection Radiometer (formerly ITIR)
ATC	Absolute Time Command
BAP	Baseline Activity Profile
CAC	Command Activity Controller
CCSDS	Consultative Committee for Space Data Systems
C&DH	Command and Data Handling
CERES	Clouds and Earth's Radiant Energy System
CI	Configuration item
CLCW	Command Link Control Words
CMS	Command Management System
COM	Communication
COTS	Commercial Off-The-Shelf
CSCI	Computer software configuration item
CSMS	Communications and System Management Segment
CSS	Communications Subsystem (CSMS)
CTIU	Command and Telemetry Interface Unit
DAR	Data Acquisition Request
DAS	Detailed Activity Schedule
DAS	Direct Access System
DB	Database
DBMS	Database Management System
DFCD	Data Format Control Document
DID	Data item description; data ingest/distribution
DSN	Deep Space Network
DSS	Decision Support System
ECL	ECS Command Language

ECOM	EOS Communications
ECS	EOSDIS Core System
EDOS	EOS Data and Operations System
EOC	EOS Operations Center
EOS	Earth Observing System
EOSDIS	EOS Data and Information System
FDF	Flight Dynamics Facility
FIFO	First In - First Out
FOS	Flight Operations Segment (ECS)
FOT	Flight Operations Team
FSE	Flight Segment Engineer
FSW	Flight Software
GN&C	Guidance Navigation and Control
HGA	High Gain Antenna
I&T	Integration and Test
ICC	Instrument Control Center
IP	International Partners
IRD	Interface requirements document
IST	Instrument Support Toolkit
JPL	Jet Propulsion Laboratory
LAN	Local Area Network
LaRC	Langley Research Center
LMC	Lockheed Martin Corporation
LSM	Local System Manager
LTIP	Long Term Instrument Plan
LTSP	Long Term Science Plan
MISR	Multi-Angle Imaging SpectroRadiometer
M&O	Maintenance & Operations
MO	Master Oscillator
MO&DSD	Mission Operations and Data Systems Directorate (GSFC Code 500)
MODIS	Moderate Resolution Imaging Spectrometer

MOPITT	Measurements of Pollution in the Troposphere
MSS	Managememt and Subsystem (part of CSMS)
MTPE	Mission to Planet Earth
Nascom	NASA Communications Network
NASDA	National Space Development Agency (Japan)
NCC	Network Control Center
NOAA	National Oceanic and Atmospheric Administration
OASIS	Operations and Science Instrument Support
OMT	Object Model Technique
OOD	Object Oriented Design
PAS	Planning and Scheduling
PDB	Project Data Base
PI	Principal Investigator
PI/TL	Principal Investigator/Team Leader
PROP	Propulsion Subsystem
PWR	Power
RMA	Reliability, Maintainability, Availability
RTCS	Relative Time Command Sequence
RTS	Relative Time Sequence
RWA	Reaction Wheel Assembly
SCC	Spacecraft Controls Computer
SFE	Science Formatting Equipment
SMC	Service Management Center
SN	Space Network
SSIM	Spacecraft Simulator
SSR	Solid State Recorder
SSST	Solid State Star Tracker
STOL	System Test and Operations Language
TD	Target Day
TDRS	Tracking and Data Relay Satellite
TDRSS	Tracking and Data Relay Satellite System

TL	Team Leader
TOO	Target of Opportunity
TW	Target Week
UTC	Universal Time Coordinated
UI	User Interface
WAN	Wide Area Network
WOTS	Wallops Orbital Tracking Station
WSGT	White Sands Ground Terminal