Solid State Recorder (SSR) Scenario

Ronald A. Jones

18 October 1995

Solid State Recorder Description

- AM-1 SSR is the science data storage device.
- FOT goal is 100% data capture.
- Average playback time is 6 minutes (Full requires 17 minutes).
- There are currently five SSR buffers defined on the AM-1 spacecraft:
  - LRS (Low Rate Science):

    CERES, MOPITT, HK (Housekeeping) , Ancillary
  - MISR
  - MODIS
  - ASTER
  - Trash

Solid State Recorder Use / How Often

- **FOT will playback SSR during every communication contact (28/day)**
- **If possible, FOT resolves playback anomaly during the contact**
- **If On-Line FOT can't resolve playback anomaly during the upcoming supports (instrument data will be lost), then the FOT Scheduler is responsible for resolution.**

SSR Flow Chart

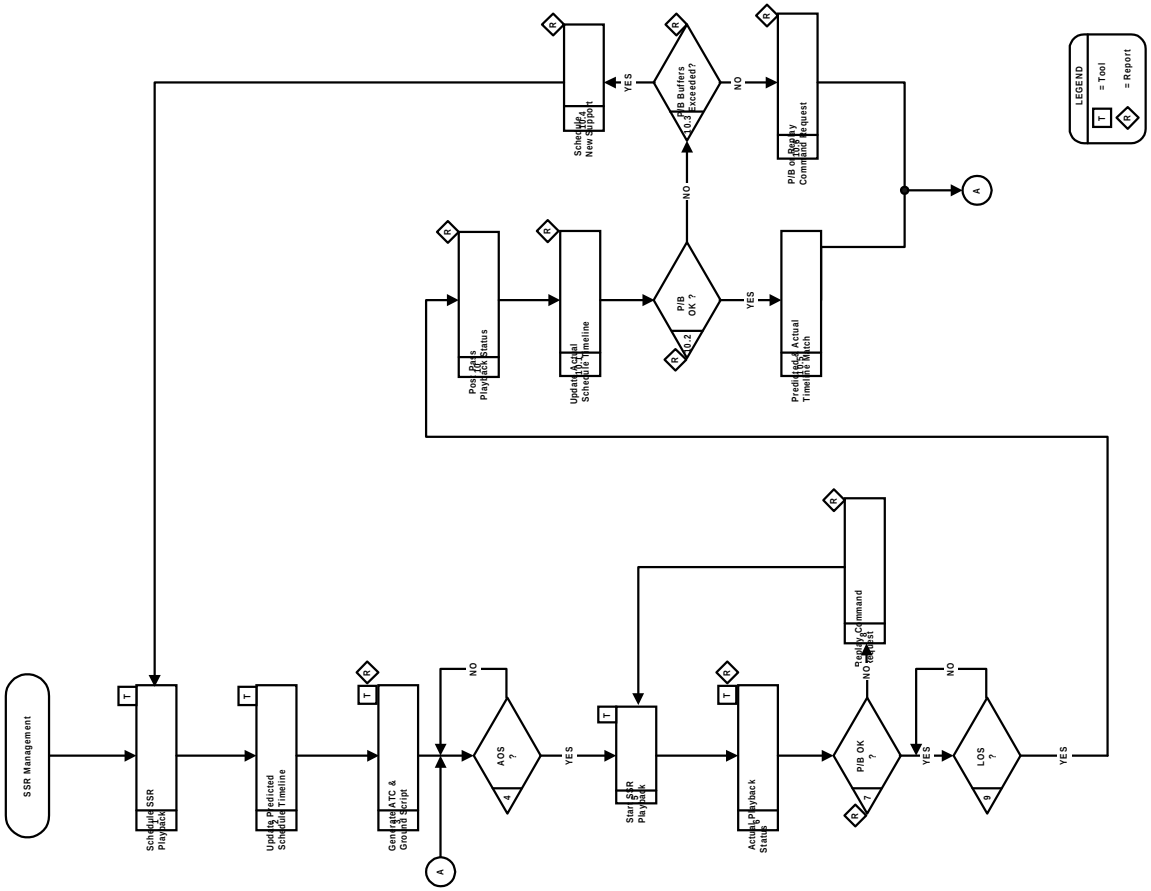

Schedule SSR Playback

<u>PRE-OPERATIONS DAY</u>

Step 1

- **FOT Scheduler uses *Communication Contact Scheduler* in Batch Mode to :**
  - **Establish NCC forecast contact schedule:**
  - **Select time span to schedule**

    Enter Start Time

    Enter Stop Time

    Press SCHEDULE

Communication Contact Scheduler

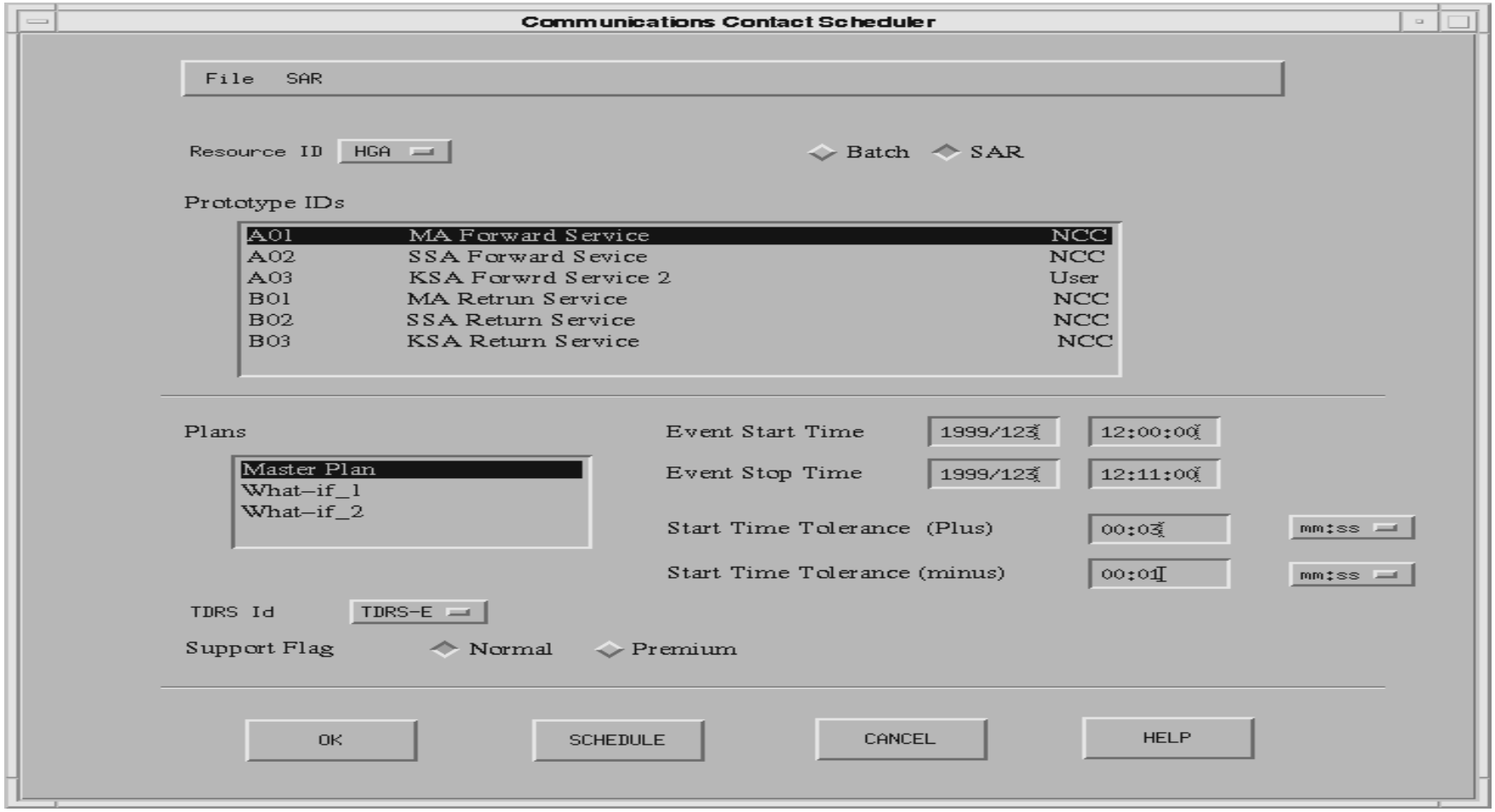

Update Predicted Scheduling Timeline

Step 2

- **FOT Scheduler views Contacts and SSR Buffers for Each Instrument on *EOC Master Timeline* tool**
  - **Use scroll bar to maneuver**
  - **Observe TDRS Supports**
  - **Observe SSR Buffer Plot**

    Graphic notification of SSR data volume overflow

EOC Master Timeline

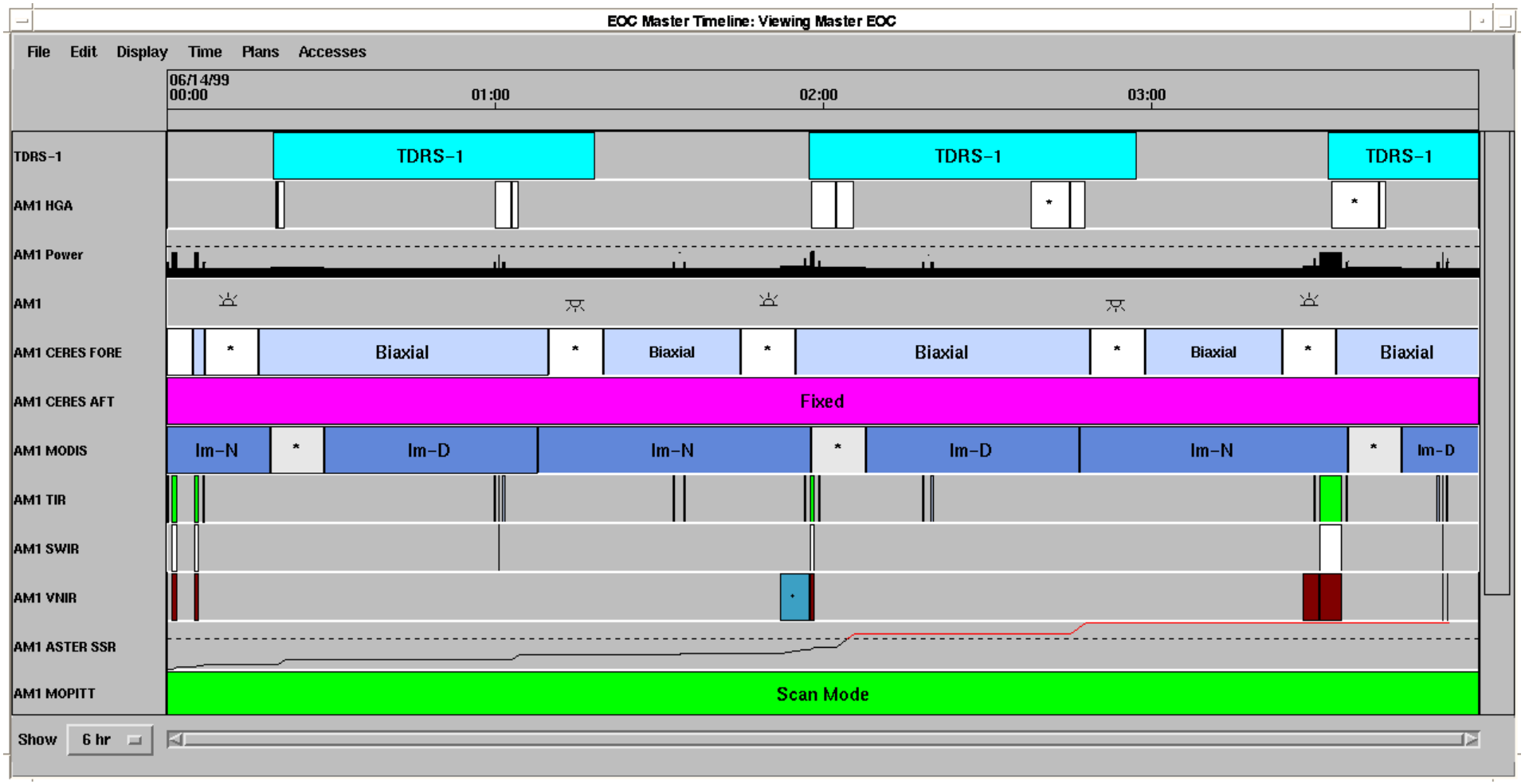

Generate ATC & Ground Script

Step 3

- **FOT Scheduler uses *ATC Load Generator* tool to:**
  - **Enter DAS Stop Time (defaults to 24 hour period)**
    - **start time is read only, based on previous DAS**
  - **Press FILE, GENERATE**
    - **Generates DAS**
    - **Generates ATC Load**
    - **Generates Ground Script**
- **FOT Spacecraft Evaluator will examine *Integrated Report*:**
  - **Ground Script portion**
    - **SSR Playback Commands (predicted start of playback)**
    - **SSR Playback Length (predicted time of dump)**
    - **SSR Counters, predict at start of contact**
  - **ATC portion shows S/C communication commands**

ATC Load Generator

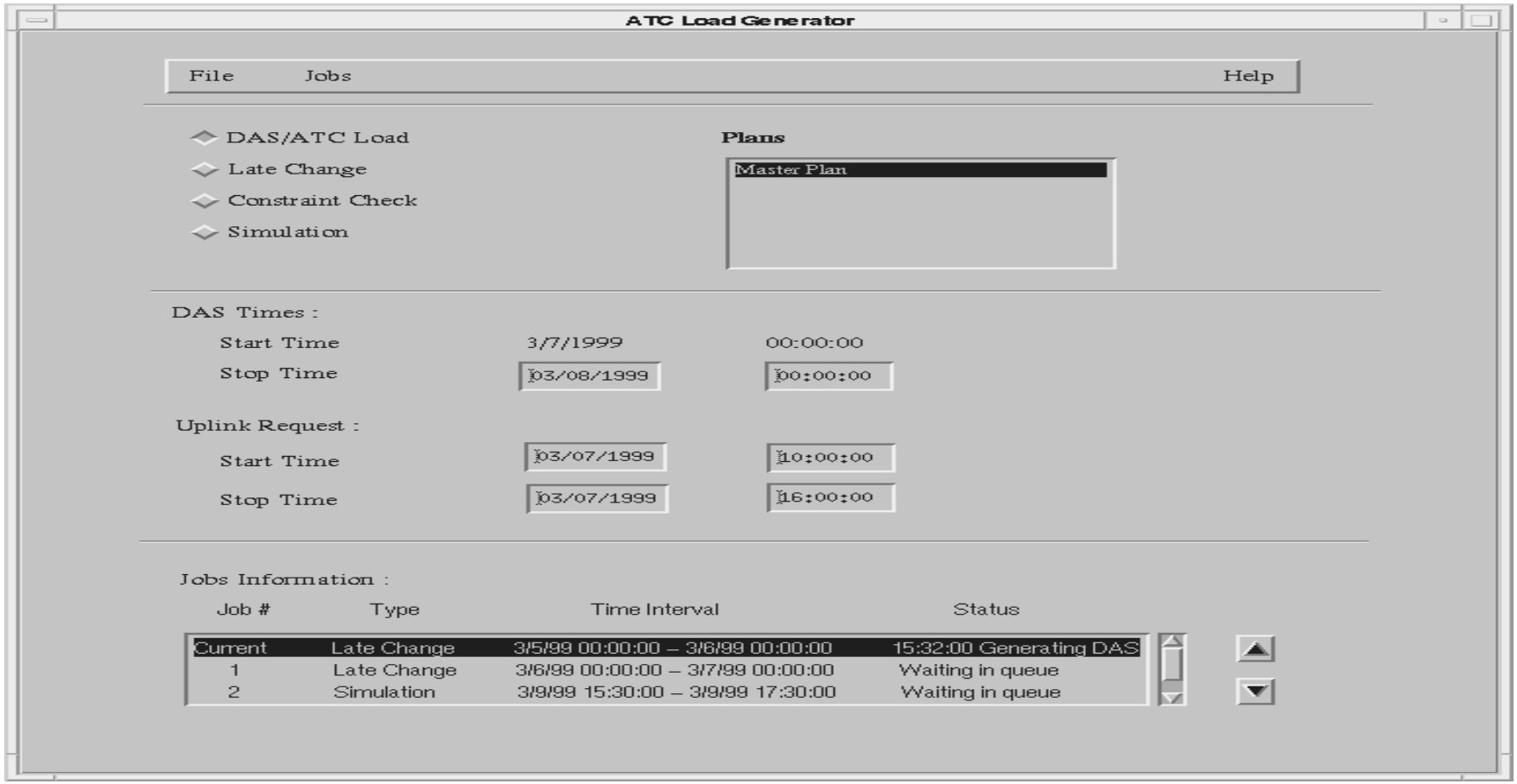

Acquisition Of Signal (AOS), Start of SSR Playback

<u>CONTACT</u>

Step 4

- **Wait for AOS**
  - **AOS count down clock on *Status Window* display**

Step 5

- **Ground Script issues spacecraft command to initiate SSR playback.**
  - **Command Activity Controller uses *Command Control Window* to monitor Ground Script .**

Command Control Window

Command Control

File Edit Config Utility Help

G/S Start Time: 166/22:53:44
G/S Stop Time: 167/13:22:14
S/C ID: AM-1
Mode: Auto
G/S Status: Active
PSC: On CV: On TV: On
Bias: 00:00:00

Time	Command/Directive	Status
167/00:02:00	#	* Comment
167/00:02:00	# Open MISR Cover	* Comment
167/00:02:00	/MICOVER OPEN	* CV, TV Pass
167/00:02:00	# Turn on the Camera	* Comment
167/00:02:15	/MICAMERA ON	* CV, TV Pass
167/00:02:15	# Enable each PS	* Comment
167/00:02:15	/MiCPSAa ENABLE	* CV, TV Pass
167/00:02:15	/MiCPSAf ENABLE	* CV, TV Pass
167/00:02:15	/MiCPSAn ENABLE	* Disable
167/00:02:15	/MiCPSBa ENABLE	* CV, TV Pass
167/00:02:15	/MiCPSBf ENABLE	* Skip
167/00:02:15	/MiCPSCa ENABLE	* Skip
167/00:02:15	#	* Skip
167/00:02:15	#	* Skip
167/00:02:15	# Wait	* Skip
167/00:02:15	#	* Comment
167/00:02:30	WAIT	* Waiting
167/00:02:30	#	
167/00:02:30	#	
167/00:03:15	/MiCPSLa ENABLE	00:00:23
167/00:03:15	/MiCPSMa ENABLE	00:00:23
167/00:03:15	/MiCPSTa ENABLE	00:00:23

Command: Allow, Override, Send, Cancel

Directive: Enable, Yes, Set Jump, Go, Disable, No, Clear Jump

Schedule: Suspend, Kill, Resume

CMD:

Actual Playback Status

Step 6

- **Spacecraft Evaluator uses *SSR Analysis Window* (note: special window built for analysis subsystem) to monitors SSR playback**
  - **Use top and middle sections to observe:**
    - **Predicted versus Actual SSR Counters**
    - **Predicted Start versus Actual Playback Start Time**
    - **Predicted versus Actual Playback Duration**
    - **Clock Present Flag**
  - **Use Problems/Solutions section to observe errors**
    - **Missing SSR data & cause event message**
    - **Recommended action event message**

SSR Analysis Window

SSR Analysis

SSR Health and Safety

PB Clock Present:	On	Memory Config Ind:	On	Replay:	On
Memory Power Status:	On	Temperature:	10 C	Playback:	Off
Built in Test Ind:	On	Overwrite Status:	Off	Instant Replay:	Off
Low Power Ind:	On	Watch Dog Timer:	Off	Record:	Off
				Standby:	Off

SSR Buffer Counters

	Playback Counter	Record Counter
LRS	000	820
MISR	000	560
MODIS	630	000
ASTER	000	620
TRASH	000	700

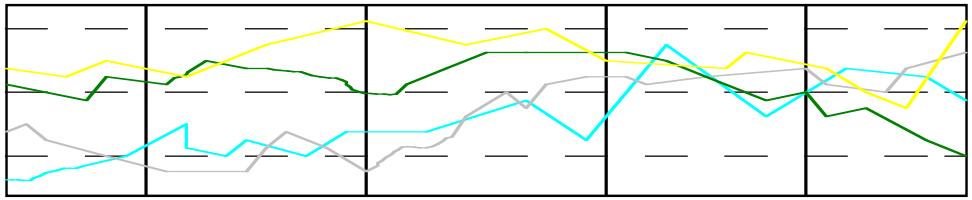

Problems/Solutions

95/193/18:14:00.857	LCP	Forward link has failed: xxxxxxxxxx
95/193/18:14:01.030	LCS	Send a GCMR: xxxxxxxxxx
95/193/18:17:20.920	DRP	Bad data quality
95/193/18:17:22.532	DRS	Replay SSR

Actual Playback Status (cont.)
Playback OK?

- **Command Activity Controller (CAC) monitors ground**
  - ***Ground Page Display* and *Event Display Window* for:**

    CODAs: EDOS Data Quality, Data Quantity

    ODMs: NCC Communication Link Status

Step 7

- **Spacecraft Evaluator uses *SSR Analysis Window Problems/Solutions* section to monitor SSR Anomalies:**
  - **SSR event message, SSR status**
  - **CODA event message, data quality/quantity status**
  - **ODM event message, communication link status**
  - **Recommend Replay SSR, duration = 'X' minutes**

Event Display Window

Replay Command Request, Loss Of Signal

Step 8

- **If anomaly and enough time left in support the Spacecraft Evaluator tells Operations Controller to send:**
  - **SSR Replay Command Request (small portion missed)**
  - **Request sent after scheduled playback finished**
- **Operations Controller uses *Command Request Evaluation Window* to accept SSR Replay Command Request**
- **Command Activity Controller use:**
  - ***Command Request Time Selector Window* to merge Command Request into ground script.**
  - ***Command Control Window* to monitor execution of Command Request**

Step 9

- **Operations Controller announces end of event 1 minute before LOS to On-Line FOT.**
  - **LOS count down clock on *Status Window* display**

Command Request Evaluation

Command Request Evaluation

Subject: Fix MISR anomoly

Request Status: Pending

Originator: R. Moore

Subsystem ID: MISR

Spacecraft ID: AM1

Instruction:

Please execute procedures at specified time. If there is a problem, please contact R. Moore at 123-4567.

Selected Procedures	S	V	Time	Directive
proc 5	P	P	167/00:00:03	start proc5()
proc 7	P	P		start proc7(12)
⋮				

View

Accept | Reject | Merge | Cancel | Help

Command Request Time Selector

Command Reqest Time Selector

◇ Insert Command Request at 167/00:00:01 [Select Time]

◇ Insert Command Request at cursor position of the Command Control window

[OK] [Cancel] [Help]

Post-Contact Playback Status

Step 10

- **Spacecraft Evaluator uses:**
  - ***EOC Master Timeline*** **to evaluate as-flown SSR Status.**

    Predicted and Actual Timeline should match
  - ***SSR Analysis Window Problems/Solutions section*** **to:**

    Determine if SSR Anomaly

    Recommended recovery scheme
- **Possible Recovery Scheme**
  - **Command Request: replay portion missed on next support(s)**
  - **Buffer Over Flow: use** ***Communication Contact Scheduler*** **in manual mode to schedule:**

    New Support

    Move Existing Support Closer

    Make Existing Support Longer