EOC Hardware Design

Jeff Glenn

16 October 1995

FOS CDR Roadmap

[redacted]

FOS CDR Overview
- FOS CDR goals
- Driving requirements

Engineering Activities
- Activities since PDR
- FOS team approach

System Architecture
- Overview
- Features

[redacted]

IST
- Capabilities
- Plans

[redacted]

Network Design
- EOC LAN
- IST Connectivity

FOS Intrastructure
- Mgt Services
- Comm Services

Segment Scenarios
- End-to-End Flow
- Subsystem Interfaces
- Building block linkage

[redacted]

Subsystem Design
- Detailed design
- FOS functions/tools
- Subsystem design features

RMA
- RMA allocation
- FMEA/CIL

[redacted]

Operations Overview
- EOC facilities
- FOT positions

Operational Scenarios
- End-to-end flow
- Operations perspective
- FOT tool usage

[redacted]

Development
- Release Plan
- Development approach

Testing
- Test approach
- Test organization

FOS Hardware Overview

- Design Objectives
- Physical Layout
- Servers
  - Real-Time Server
  - Data Server
- Time Gateway
- Data Storage
- User Stations
- GFE

Design Objectives

Fault Tolerant

- **No single point of failure**
- **Redundant servers**
- **Redundant components (RAID)**
  - **Fans**
  - **Controllers**
  - **Drives**
  - **Power**

Scalable

- **Current architecture can support multiple missions**
- **Distribute processing to EOC User Stations**

Design Objectives (cont.)

Supports Software Architectural Flexibility

- **Industry standards based**
  - **POSIX**
  - **DCE**
  - **NFS**
  - **SCSI**
  - **FDDI**
- **Vendor independent**
  - **Not using proprietary hardware technology**
- **Platform independent**
  - **Use latest platforms**

EOC Physical Layout

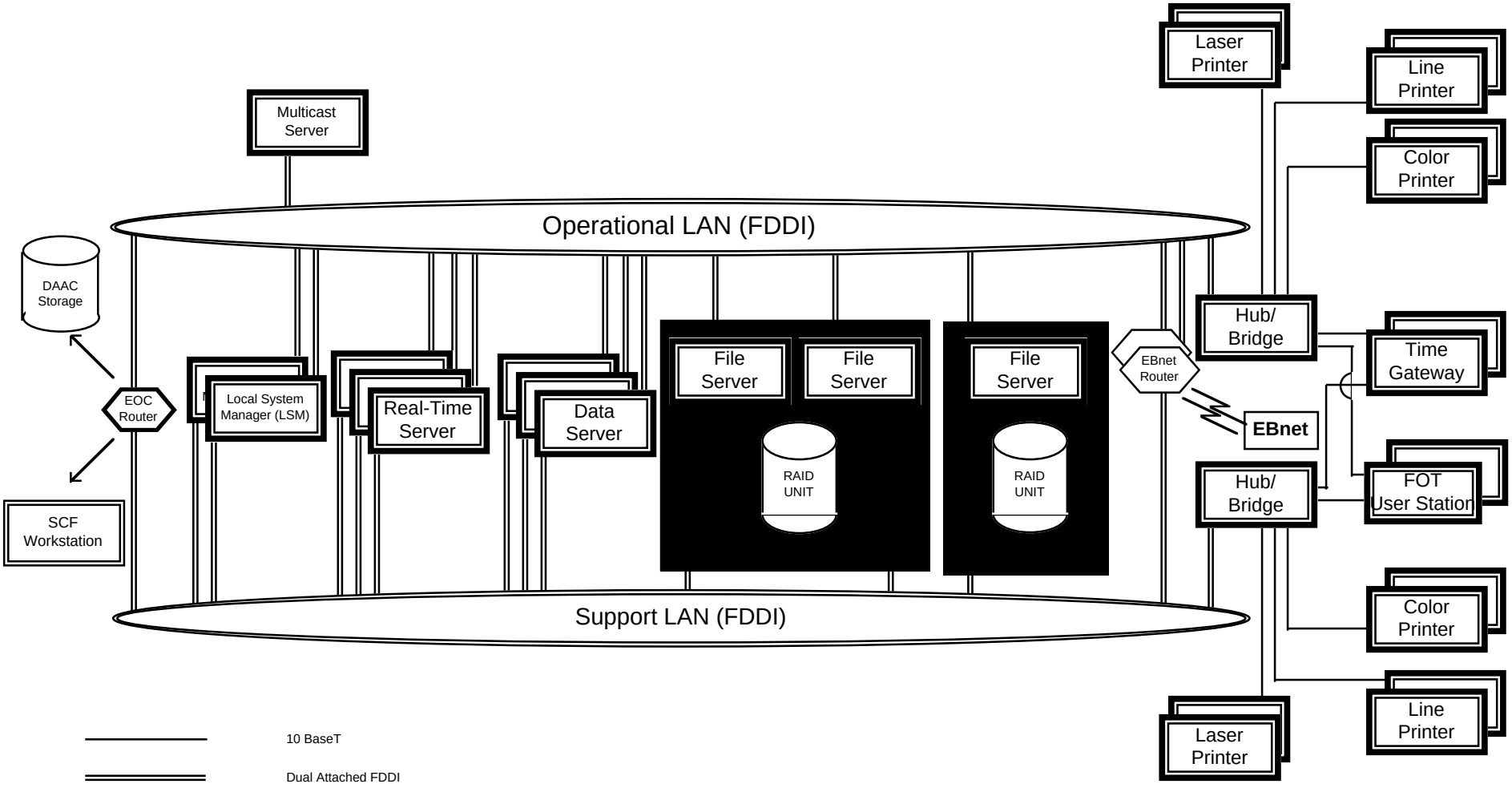

EOC Servers

Real-Time Server DEC Alpha 1000 4/233	**Data Server** DEC Alpha 1000 4/233	**Multicast Server** SUN Sparc20	**Local System Mgr.** HP J210
3 Redundant Servers SPECint92: 165.3 256MB Memory 6GB Local Drive (internal) 2 Dual Attached FDDI Cards POSIX IEEE 1003.1 POSIX IEEE 1003.4 CD-ROM (internal) 4MM DAT Drive (internal) Rack Mounted - 10.5” vertical rack space	3 Redundant Servers SPECint92: 165.3 256MB Memory 6GB Local Drive (internal) 2 Dual Attached FDDI Cards POSIX IEEE 1003.1 POSIX IEEE 1003.4 CD-ROM (internal) 4MM DAT Drive (internal) Rack Mounted - 10.5” vertical rack space	1 Server 64MB Memory 2GB Local Drive FDDI Attached POSIX IEEE 1003.1	2 Redundant Servers 256 MB Memory 22 GB Local Drive (RAID) FDDI Attached POSIX IEEE 1003.1 CD-ROM

Server Features

State of the art architecture

- **64-bit architecture**
- **Multicast capable kernel**
- **Mature Real-Time extensions**

Performance efficiency

Real-Time, Data Server - All one type: interchangeable

Timing

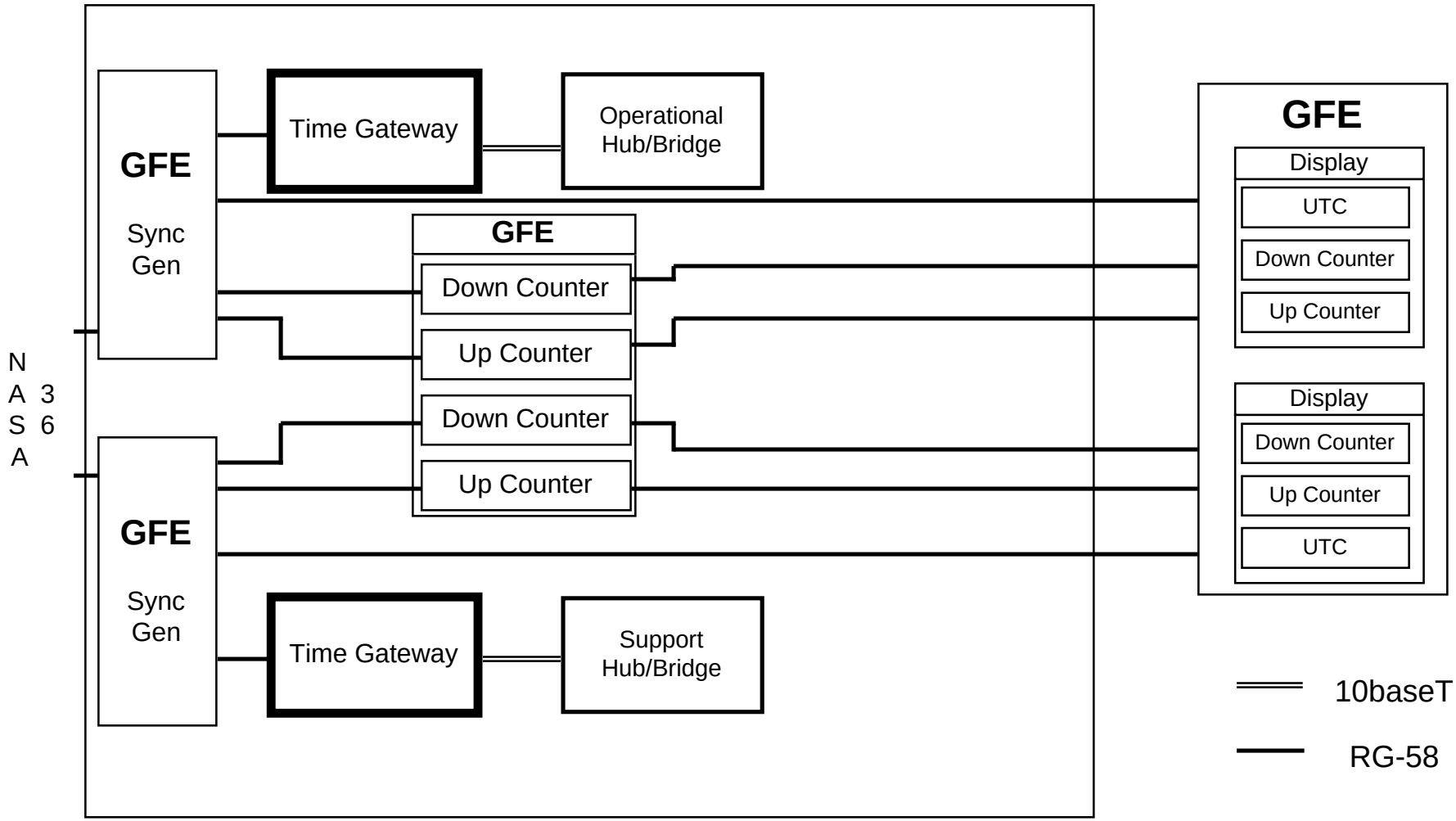
GFE
Sync Gen
Time Gateway
Operational Hub/Bridge
GFE
Down Counter
Up Counter
Down Counter
Up Counter
GFE
Sync Gen
Time Gateway
Support Hub/Bridge
GFE
Display
UTC
Down Counter
Up Counter
Display
Down Counter
Up Counter
UTC
NASA 36
10baseT
RG-58

Time Signal Flow

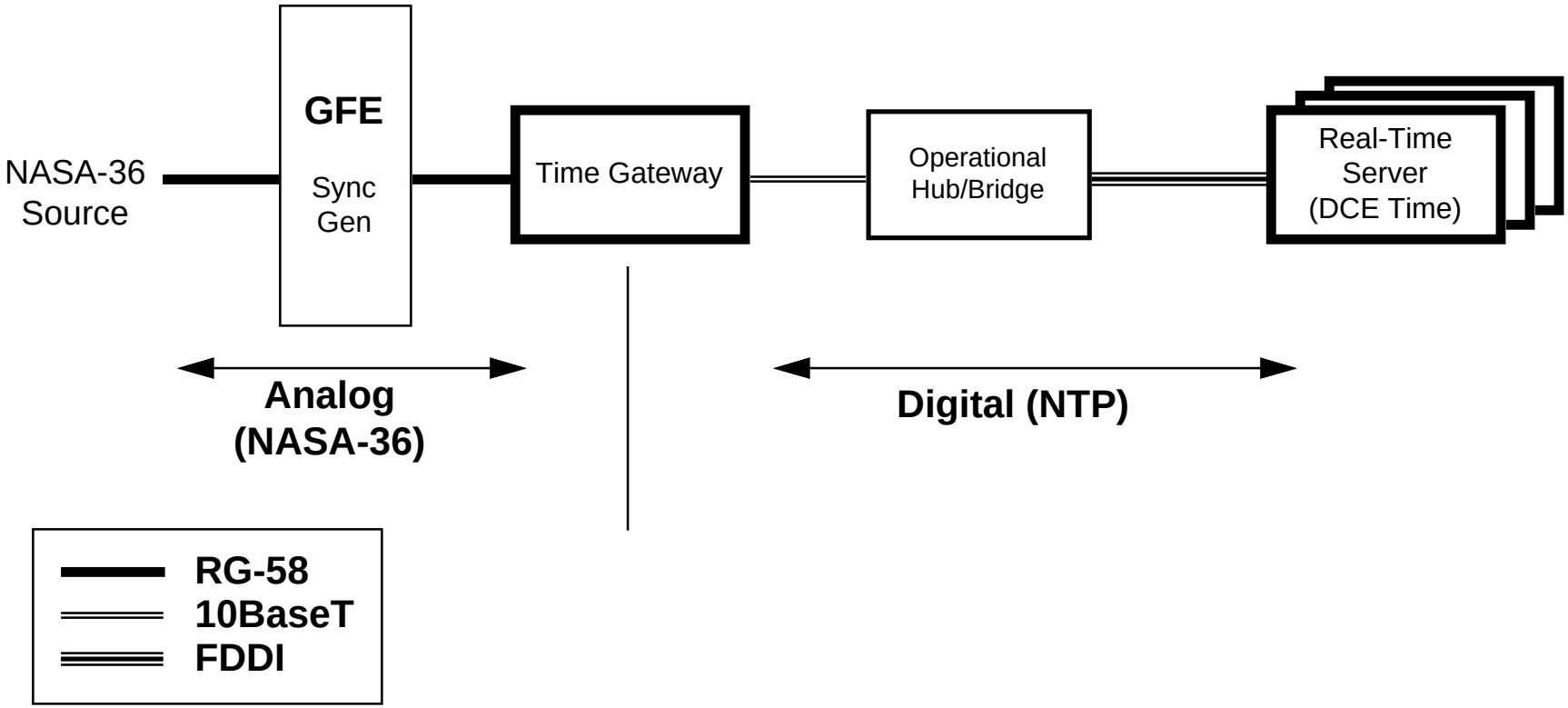

Data Storage

Redundant Disks

- **RAID level 3 & 5**
- **84GB raw disk**
- **65GB usable disk area**
- **Hot swappable disks**
- **Hot spare disk**

Redundant components

- **RAID controllers**
- **Front-end processors**
- **2 - Dual attached FDDI cards per server**

Data Storage

Operational Data Storage

File Server
DEC Alpha 1000 4/233

2Redundant Servers
SPECint92: 165.3
128MB Memory
2 Dual Attached FDDI Card
POSIX IEEE 1003.1
CD-ROM
4MM DAT Drive
Rack Mounted

RAID UNIT
Storage Works

RAID 3 & 5
60 GB Physical Disk Space
45 GB User Data Area
Expandable
Hot Swappable Disks
Hot Swappable Components
Dual Hosted to File Servers
Rack Mounted

Support Data Storage

File Server
DEC Alpha 1000 4/233

Single Servers
SPECint92: 165.3
128MB Memory
2 Dual Attached FDDI Card
POSIX IEEE 1003.1
CD-ROM
4MM DAT Drive
Rack Mounted

RAID UNIT
Storage Works

RAID 3 & 5
24 GB Physical Disk Space
20 GB User Data Area
Expandable
Hot Swappable Disks
Rack Mounted

RAID Storage

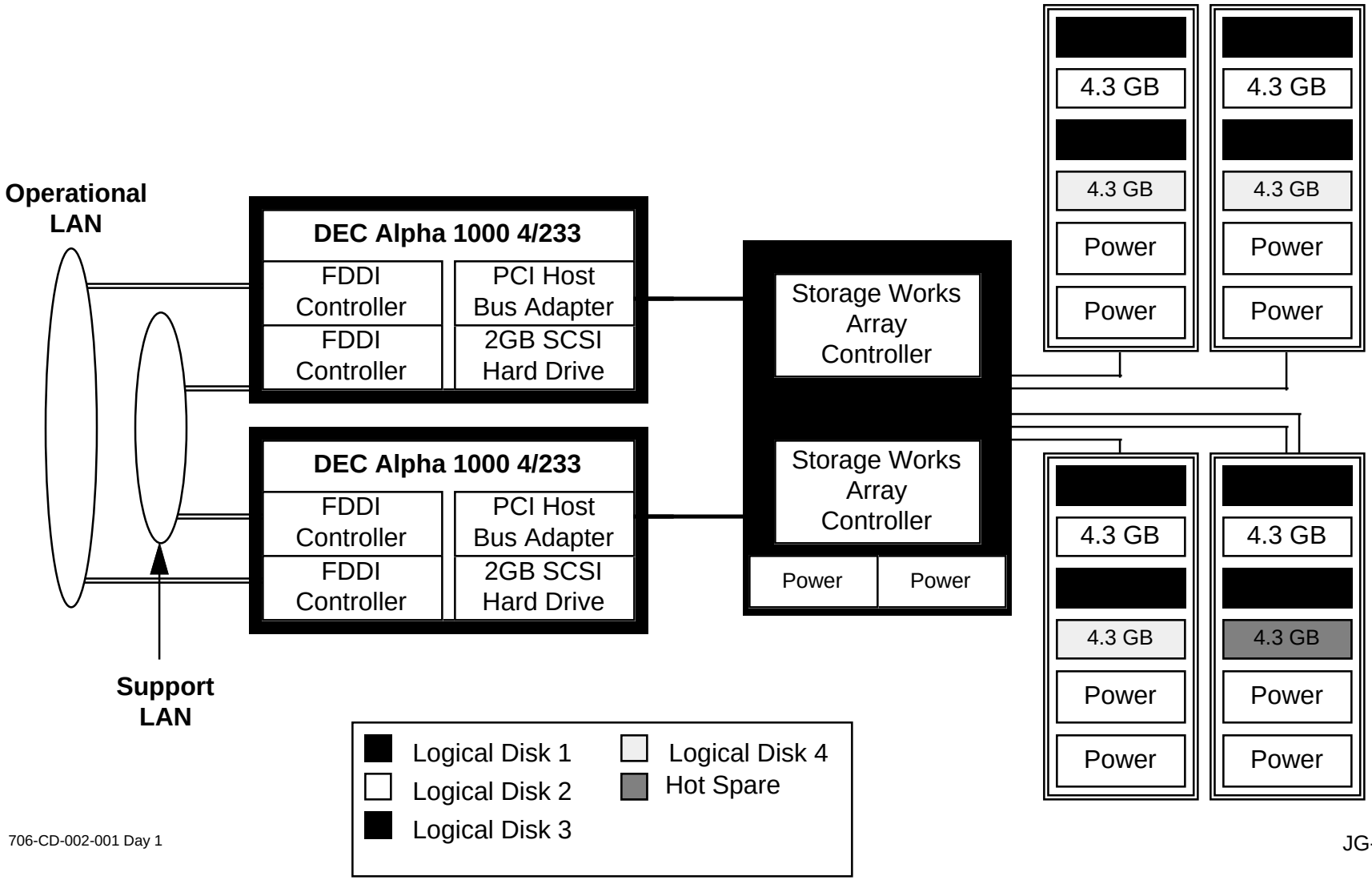

Data Storage Features

Performance

- **Removes I/O overhead from servers**
- **Supports RAID 3 & 5**
- **Efficient telemetry data access**
- **Multiple reads & writes concurrently**

Fault Tolerant

- **No single point of failure**
- **Separate operational & support data**

Flexibility

- **Physical location of disk/data transparent to users**
- **Manage data access**
- **> 50% disk Available**
- **Modular Growth**

AM-1 Operational Data Requirements

	MB
Application Software	1,195.0
Subsystem Data	
Telemetry	2,083.0
Commanding	2.5
Plan & Sched	1,023.5
User Interface	2,292.5
Analysis	4,740.7
Data Mgt.	2,126.8
Command Mgt.	1,442.7
Resource Mgt.	202.8
Scratch Area	1,510.9
Total	16,620.4

Disk Usage

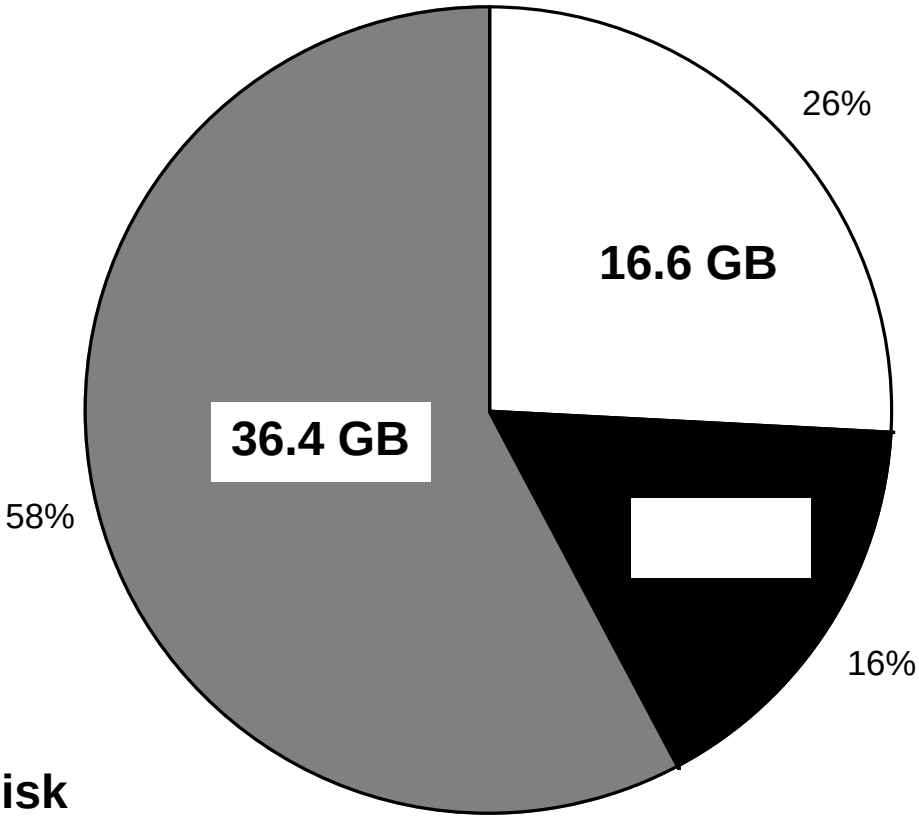

- Operational Data
- Development & Test
- Spare Disk

65 GB Usable Disk

Usable = Raw - RAID Overhead

User Stations

Requirements:

- **Memory: 64 MB**
- **SPECint92: 80**
- **Disk Space: 2GB**
- **Monitor: 19” Color w/ 1280x1024 resolution**
- **LAN Connection: 2 Ethernet**

36 User Stations
SPECint92: 125.8
64MB Memory
2GB Local Disk
20” Color Monitor
- 1280x1024 resolution
POSIX IEEE 1003.1
10BaseT Connection (2)

User Station Features

- Development Platform
- Ease of Use
- Price / Performance
- Scalable
- Upgradeable
- Add processor

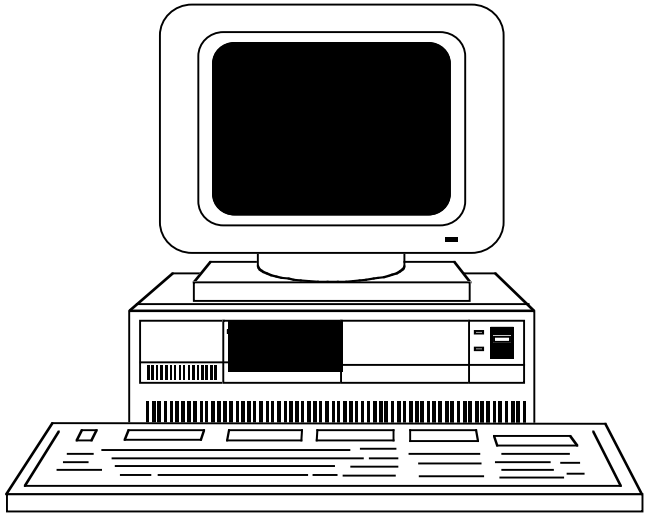

EOC Printers

Laser Printer	Line Printer	Color Printer
8 Pages Per Minute Network Attached (10BaseT) Operational: 5 Printers Support: 2 Printers	1200 Lines Per Minute Network Attached (10BaseT) Operational: 3 Printers Support: 2 Printers	8 Pages Per Minute (B&W) 2 Pages Per Minute (Color) Network Attached (10BaseT) Operational: 3 Printers Support: 2 Printers

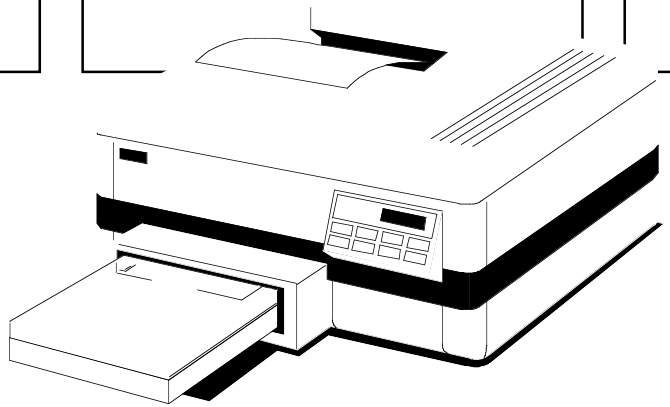

Government Furnished Equip.

Hardware on EOC LAN

- **User Planning System (UPS)**

Hardware

- **2 FDF workstations**
- **SAS**
  - **AM-1 simulator**
  - **ETS**

Voice communication equipment

Time equipment

- **Displays**
- **Time sync generators**
- **Up/down counters**