# Reliability/Maintainability/Availability (RMA) Modeling

**Bang Nguyen**

**bnguyen@eos.hitc.com**

**2 November 1995**

# RMA Modeling Agenda

- Release B Specific RMA Requirement
- RMA Analytical Assessment Approach
- Availability Assumptions
- RMA COTS Data and Documentation Flow
- Sample Of A Release B RMA Input Table and Block Diagram
- Release A CDR Availability Results
- Release B IDR Availability Results

# Additional L3 RMA Requirement For Release B

- **EOSD3950: The SDPS Function Of Data Acquisition Request (DAR) Submittals Including TOOs Shall Have An Operational Availability Of 0.993 At A Minimum And An MDT Of Two (2) Hours Or Less.**

- **Five (5) Additional DAAC Sites Required RMA Analyses: EDC, ASF, JPL, NSIDC, and ORNL**

# RMA Analytical Assessment Approach Is Consistent With Release A

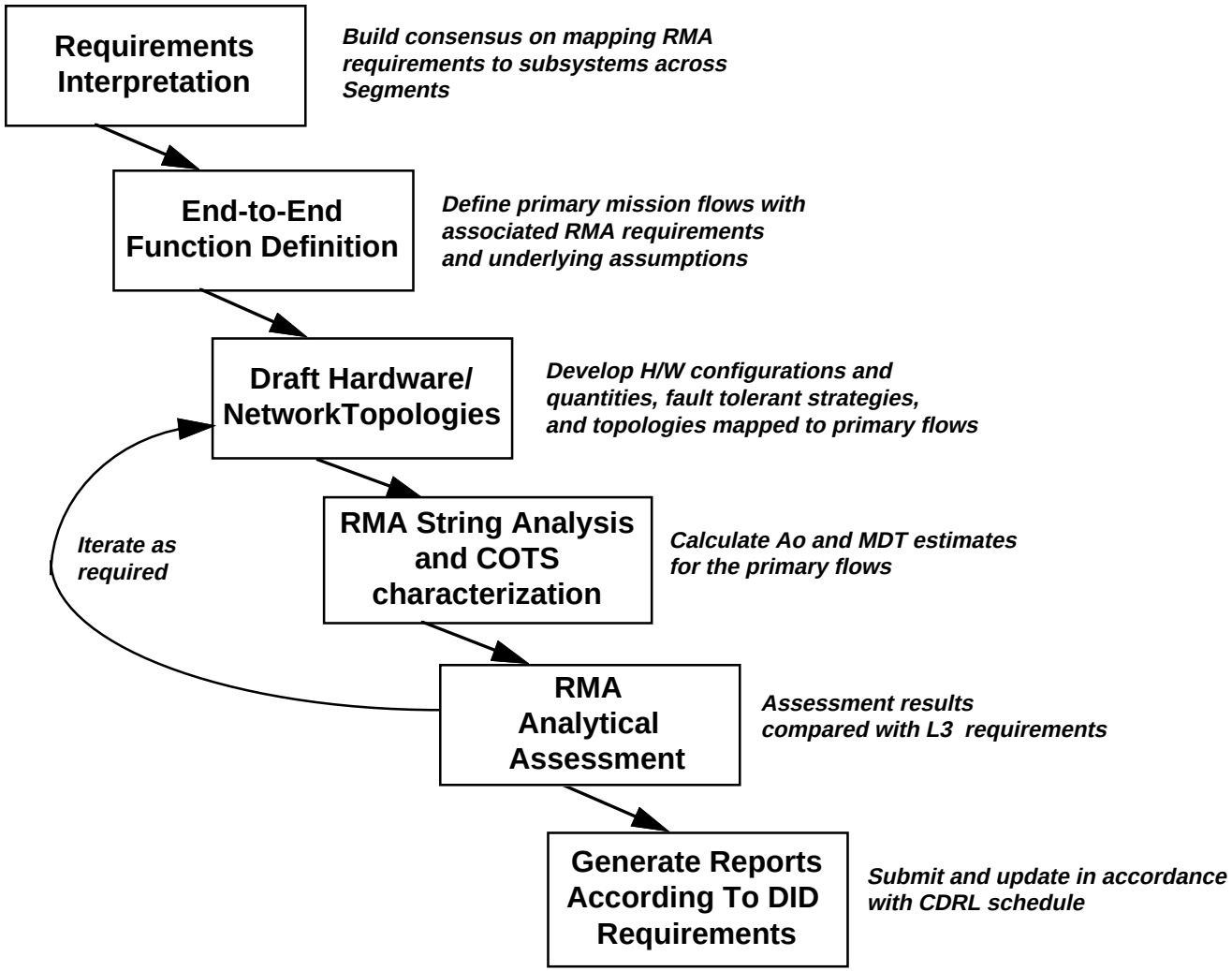

# ECS Availability Modeling Assumptions

***Assumptions Are The Same As At Release A CDR:***

- **Availability Calculations Only Apply To Hardware Configurations During Staffed Hours of Operation**
- **EBNet-Owned Equipment Is Not Part Of the RMA Calculations**
- **RMA Data Was Based On COTS vendors and/or HAIS Predictions**
- **Availability Results Were Calculated Using The Reliability With Repair Model For Redundant System (The Einhorn Equations)**
- **Software Availability = 1.0 for Analysis**
  - **Software and Hardware Will Be Measured During System Test and Operation**

# RMA COTS Data and Documentation Flow

- All RMA Deliverables Have Been Updated And Submitted Two (2) Weeks Prior To Release B IDR

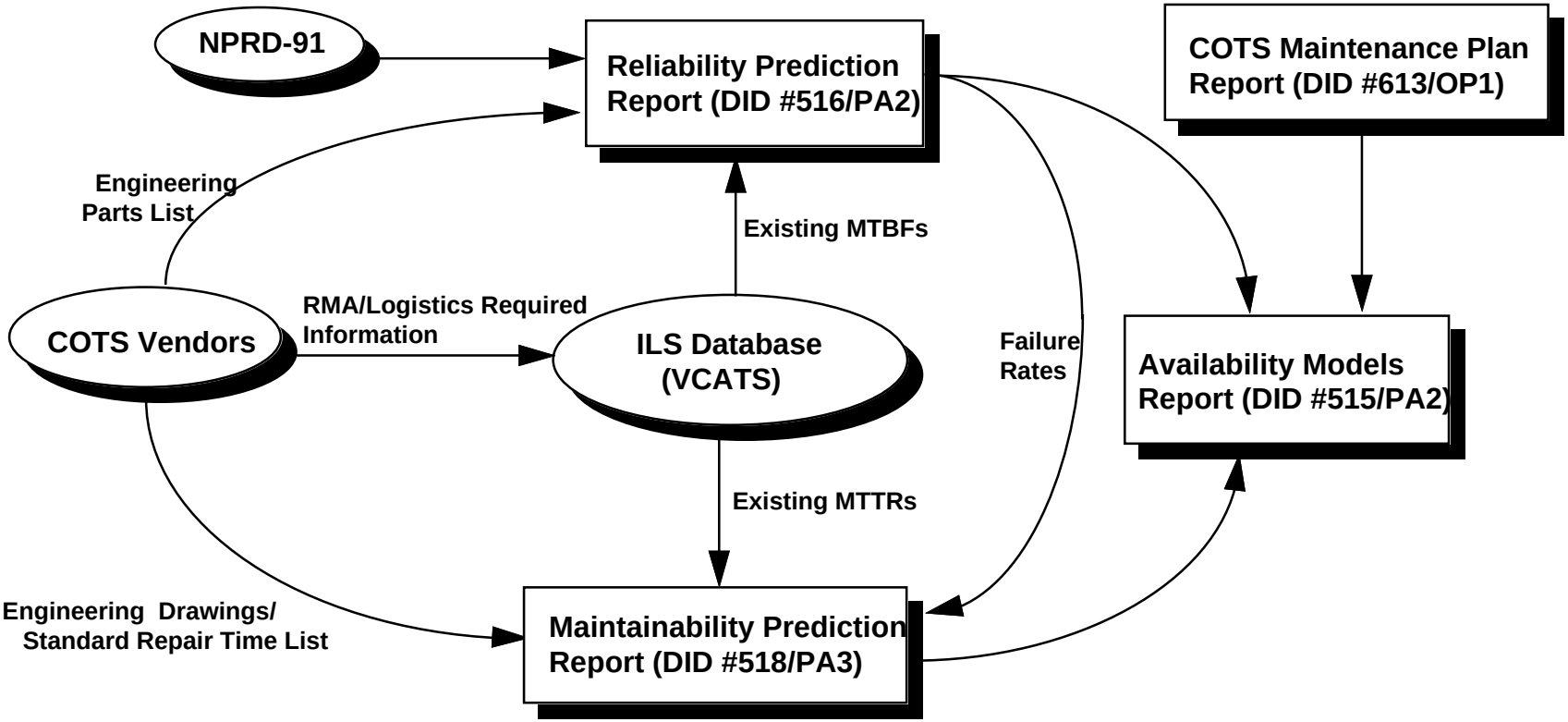

# Sample Of Availability Input Table

**EOSD3900: Function of Receiving Science Data (Ao=.9990, MDT=2.0 hrs)**

| Release | Site | Subsystem Description | Equipment Description | Model/Part Number | MTBF (hour) | MTTR (hour) | Admin. Logistic Delay Time (hour) | Switch-over Time (min) | Total Down-time (hour) | Number of Units Required (m) | Total Number Of Units (n) | Redun-dancy | Unit Availability (Ai) | P | Redundant Group Availability (m out of n) |
|---|---|---|---|---|---|---|---|---|---|---|---|---|---|---|---|
| B | LaRC | Ingest | ICL Server Host (512 MB, 2 CPU,6GB)/8mm tape | SGI Challenge L/Exabyte | 7,619 | 1.50 | 4 | 15.00 | 5.50 | 1 | 2 | standby off-line | 0.9992786 | 1.0 | 0.9999999 |
| B | LaRC | Ingest | RAID Disk 100GB (shared) | HP | 150,000 | 0.50 | 4 | N/A | 4.50 | 1 | 1 | N/A | 0.9999700 | N/A | 0.9999700 |
| B | LaRC | Ingest | Archive Robot | Bosch AMASS EML/2 | 23,237 | 1.00 | 4 | N/A | 5.00 | 1 | 1 | N/A | 0.9997849 | N/A | 0.9997849 |
| B | LaRC | Ingest | Ingest Linear Magnetic Drives | IBM-MagStar 3590 (NTP) | 35,000 | 0.50 | 4 | 5.00 | 4.50 | 1 | 2 | standby off-line | 0.9998714 | 1.0 | 1.0000000 |
| B | LaRC | Ingest | Ingest X-Terminal(shared w/Data Server w/s) | NCD Xterm | 27,548 | 1.00 | 4 | 15.00 | 5.00 | 1 | 2 | standby off-line | 0.9998185 | 1.0 | 1.0000000 |
| B | LaRC | ISS | Concentrator (BayNetworks) | Synoptics 2914-04 | 100,000 | 0.50 | 4 | 5.00 | 4.50 | 2 | 3 | stand by off-line | 0.9999550 | 1.0 | 1.0000000 |
| A | LaRC | ISS | FDDI Switch | Atlantec Power Hub 7000 | 146,520 | 0.50 | 4 | 10.00 | 4.50 | 2 | 2 | N/A | 0.9999693 | N/A | 0.9999386 |
| B | LaRC | LSM | MSS/CSS Server (256MB, 6GB) | HPJ210/1 | 16,560 | 2.60 | 4 | 5.00 | 6.60 | 1 | 2 | standby off-line | 0.9996016 | 1.0 | 1.0000000 |
| B | LaRC | LSM | MSS/CSS RAID 20 GB | SGI RAID 5 | 150,000 | 1.50 | 4 | N/A | 5.50 | 1 | 1 | N/A | 0.9999633 | N/A | 0.9999633 |
| | | | EOSD3900: Ao = | 0.999656704 | | | | | | | | | | | |
| | | | MDT = | 1.100046012 | | | | | | | | | | | |

# Sample Of An RMA String: EOSD3900: SDPS Function Of Receiving Science Data (LaRC Site)

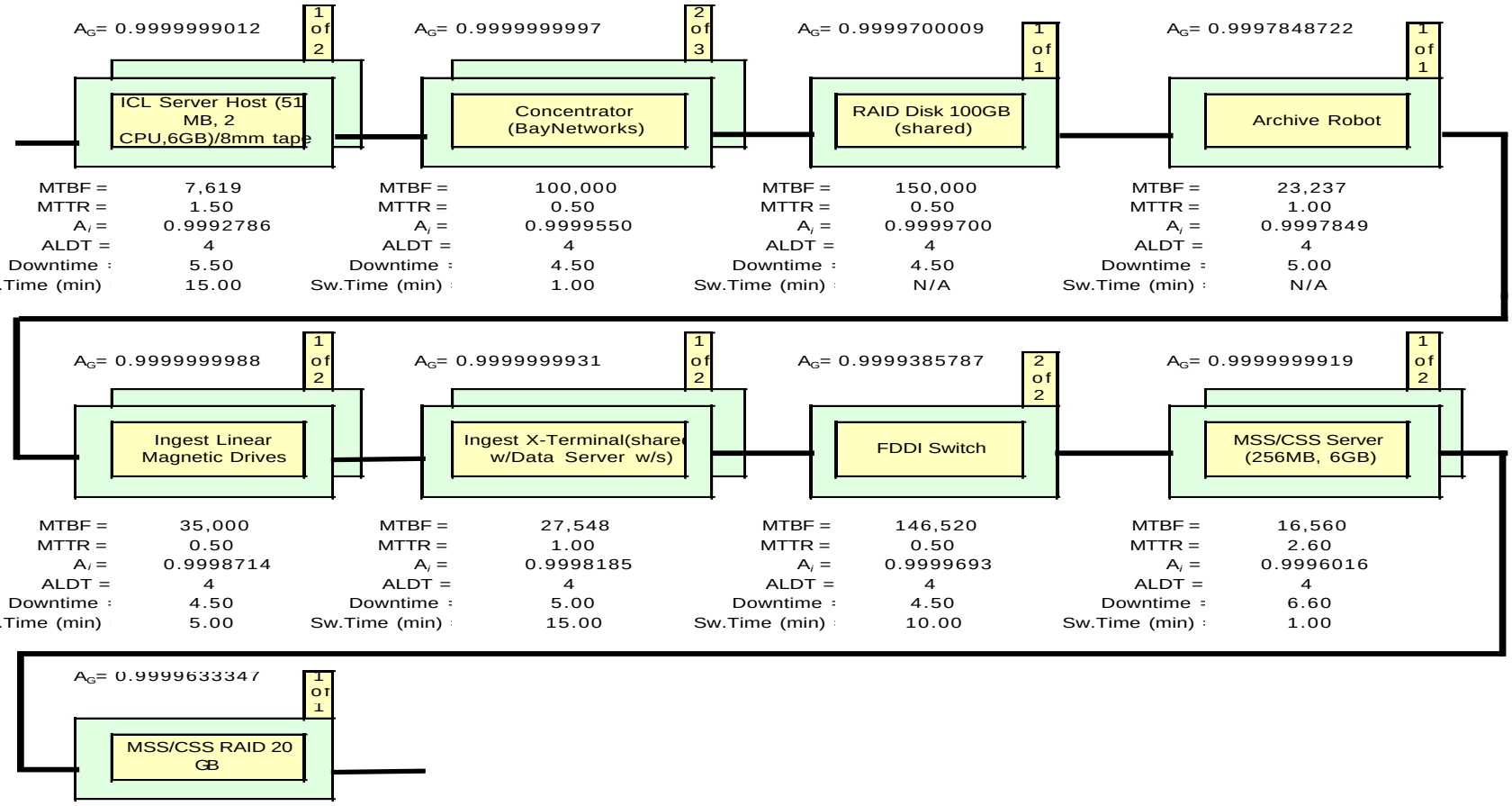

# Release A CDR Ao and MDT Results Summary

- **Release A Design Meets All RMA Requirements With Considerable Margin**
- **Margin Is Necessary To Allow The System To Grow And Meet Final Release Requirements**

| Rel A: Req't Nos. (Ao/MDT) | LaRC | | MSFC | | GSFC | |
|---|---|---|---|---|---|---|
| | Ao | MDT(hrs) | Ao | MDT(hrs) | Ao | MDT(hrs) |
| EOSD3700 (0.96/<4.0 hrs) | 0.9976716 | 2.95 | 0.9967215 | 3.75 | 0.9959019 | 3.74 |
| EOSD3900 (0.999/2.0 hrs) | 0.9999469 | 0.25 | 0.9999469 | 0.25 | N/A* | N/A* |
| EOSD3920 (0.98/<2.0 hrs) | 0.9995683 | 0.48 | 0.9995418 | 0.50 | 0.9995418 | 0.50 |
| EOSD3930 (0.993/<2.0 hrs) | 0.9999470 | 0.24 | 0.9999470 | 0.24 | 0.9999470 | 0.24 |
| EOSD3940 (0.993/<2.0 hrs) | 0.9999582 | 0.20 | 0.9999582 | 0.20 | 0.9999582 | 0.20 |
| EOSD3960 (0.96/<4.0 hrs) | 0.9999135 | 0.26 | 0.9999135 | 0.26 | 0.9999135 | 0.26 |
| EOSD3970 (0.96/<4.0 hrs) | 0.9999470 | 0.24 | 0.9999470 | 0.24 | 0.9999470 | 0.24 |
| EOSD3980 (0.96/<4.0 hrs) | 0.9999582 | 0.17 | 0.9999582 | 0.17 | 0.9999582 | 0.17 |
| EOSD3990 (0.96/<4.0 hrs) | 0.9999582 | 0.19 | 0.9999582 | 0.19 | 0.9999582 | 0.19 |
| EOSD4000 (0.96/<4.0 hrs) | 0.9998241 | 0.49 | 0.9998241 | 0.49 | 0.9998241 | 0.49 |
| EOSD4010 (Ao < 0.95) | 0.9991776 | N/A | 0.9991776 | N/A | 0.9991776 | N/A |
| EOSD4030 (.998/<20 Min) | 0.9999693 | 0.08 | 0.9999693 | 0.08 | 0.9999693 | 0.08 |

* No L0 Science Data Ingest at GSFC for Rel.A

# Release B IDR Ao and MDT Results Summary

- **ECS Release B IDR Design Continues To Meet All RMA Requirements.**

| Req't Nos. (Ao/MDT) | LaRC Ao | LaRC MDT (hrs) | NSIDC Ao | NSIDC MDT (hrs) | GSFC Ao | GSFC MDT (hrs) | MSFC Ao | MSFC MDT (hrs) |
|---|---|---|---|---|---|---|---|---|
| EOSD3700 (0.96/<4.0 hrs) | 0.9984729 | 2.15 | 0.9984442 | 2.89 | 0.9984717 | 2.12 | 0.9982926 | 3.53 |
| EOSD3900 (0.999/2.0 hrs) | 0.9996567 | 1.10 | N/A * | N/A * | 0.9994922 | 1.45 | 0.9998718 | 0.56 |
| EOSD3920 (0.98/<2.0 hrs) | 0.9984375 | 1.54 | 0.9986238 | 1.44 | 0.9984373 | 1.58 | 0.9985574 | 1.66 |
| EOSD3930 (0.993/<2.0 hrs) | 0.9997534 | 0.65 | 0.9994367 | 0.45 | 0.9997534 | 0.65 | 0.9997984 | 0.56 |
| EOSD3940 (0.993/<2.0 hrs) | 0.9997902 | 0.75 | 0.9994735 | 0.45 | 0.9997902 | 0.75 | 0.9998352 | 0.62 |
| EOSD3960 (0.96/<4.0 hrs) | 0.9995082 | 0.69 | 0.9993173 | 0.40 | 0.9995082 | 0.69 | 0.9997983 | 0.43 |
| EOSD3970 (0.96/<4.0 hrs) | 0.9997834 | 0.64 | 0.9998650 | 0.45 | 0.9997834 | 0.64 | 0.9998284 | 0.54 |
| EOSD3980 (0.96/<4.0 hrs) | 0.9998202 | 0.54 | 0.9993542 | 0.45 | 0.9998202 | 0.54 | 0.9998652 | 0.42 |
| EOSD3990 (0.96/<4.0 hrs) | 0.9998202 | 0.54 | 0.9989261 | 1.69 | 0.9997902 | 0.54 | 0.9997902 | 0.54 |
| EOSD4000 (0.96/<4.0 hrs) | 0.9997010 | 0.72 | 0.9993028 | 1.53 | 0.9997010 | 0.72 | 0.9997010 | 0.72 |
| EOSD4010 (Ao < 0.95) | 0.9991534 | N/A | 0.9995087 | N/A | 0.9991534 | N/A | 0.9995087 | N/A |
| EOSD4030 (.998/<20 Min) | 0.9999019 | 0.87 | 0.9999019 | 0.87 | 0.9999019 | 0.87 | 0.9999019 | 0.87 |

* No L0 Ingest at NSIDC

# Release B IDR Ao and MDT Results Summary (continued)

| Req't Nos. (Ao/MDT) | JPL Ao | JPL MDT (hrs) | ORNL Ao | ORNL MDT (hrs) | EDC Ao | EDC MDT (hrs) | ASF Ao | ASF MDT (hrs) |
|---|---|---|---|---|---|---|---|---|
| EOSD3700 (0.96/<4.0 hrs) | 0.9972693 | 3.14 | N/A* | N/A* | 0.998615 | 12.29 | N/A* | N/A* |
| EOSD3900 (0.999/2.0 hrs) | 0.9998718 | 0.61 | N/A* | N/A* | 0.999871 | 60.51 | N/A* | N/A* |
| EOSD3920 (0.98/<2.0 hrs) | 0.9986239 | 1.44 | 0.9999084 | 0.39 | 0.998618 | 61.62 | 0.9986186 | 1.65 |
| EOSD3930 (0.993/<2.0 hrs) | 0.9994367 | 0.45 | 0.9994801 | 0.43 | 0.999798 | 40.56 | 0.9994307 | 0.47 |
| EOSD3940 (0.993/<2.0 hrs) | 0.9994735 | 0.45 | 0.9994981 | 0.43 | 0.999835 | 20.62 | 0.9994676 | 1.98 |
| **EOSD3950 (0.993/<2.0 hrs)**** | N/A | N/A | N/A | N/A | 0.999452 | 30.08 | N/A | N/A |
| EOSD3960 (0.96/<4.0 hrs) | 0.9992872 | 0.35 | 0.9993608 | 0.32 | 0.999829 | 51.07 | 0.9998290 | 0.52 |
| EOSD3970 (0.96/<4.0 hrs) | 0.9998650 | 0.45 | 0.9999085 | 0.43 | 0.999828 | 40.54 | 0.9998591 | 0.45 |
| EOSD3980 (0.96/<4.0 hrs) | 0.9998652 | 0.44 | 0.9994155 | 1.98 | 0.999865 | 20.42 | 0.9998959 | 0.42 |
| EOSD3990 (0.96/<4.0 hrs) | 0.9994735 | 0.32 | 0.9989694 | 0.41 | 0.999835 | 20.42 | 0.9994676 | 0.61 |
| EOSD4000 (0.96/<4.0 hrs) | 0.9994367 | 1.27 | 0.9994801 | 1.27 | 0.999701 | 00.72 | 0.9994674 | 1.25 |
| EOSD4010 (Ao < 0.95) | 0.9995087 | N/A | N/A* | N/A | 0.999153 | 4 N/A | N/A* | N/A |
| EOSD4030 (.998/<20 Min) | 0.9999019 | 0.87 | 0.9999453 | 0.84 | 0.999901 | 90.87 | 0.9999019 | 0.87 |

* There are no data products processing and L0 ingest at ORNL and ASF
** DAR Function is only applied to EDC site