Reliability/Maintainability/ Availability (RMA) Modeling

Bang Nguyen

bnguyen@eos.hitc.com

Release A SDPS/CSMS Critical Design Review
17 August 1995

RMA Modeling Agenda

- RMA Analytical Assessment Approach
- RMA COTS Data and Documentation Flow
- RMA Measures
- Availability Modeling Process
  - Assumptions
  - Math Models
  - RMA Database
  - Block Diagrams
- Release A CDR Availability Results

RMA Analytical Assessment Approach

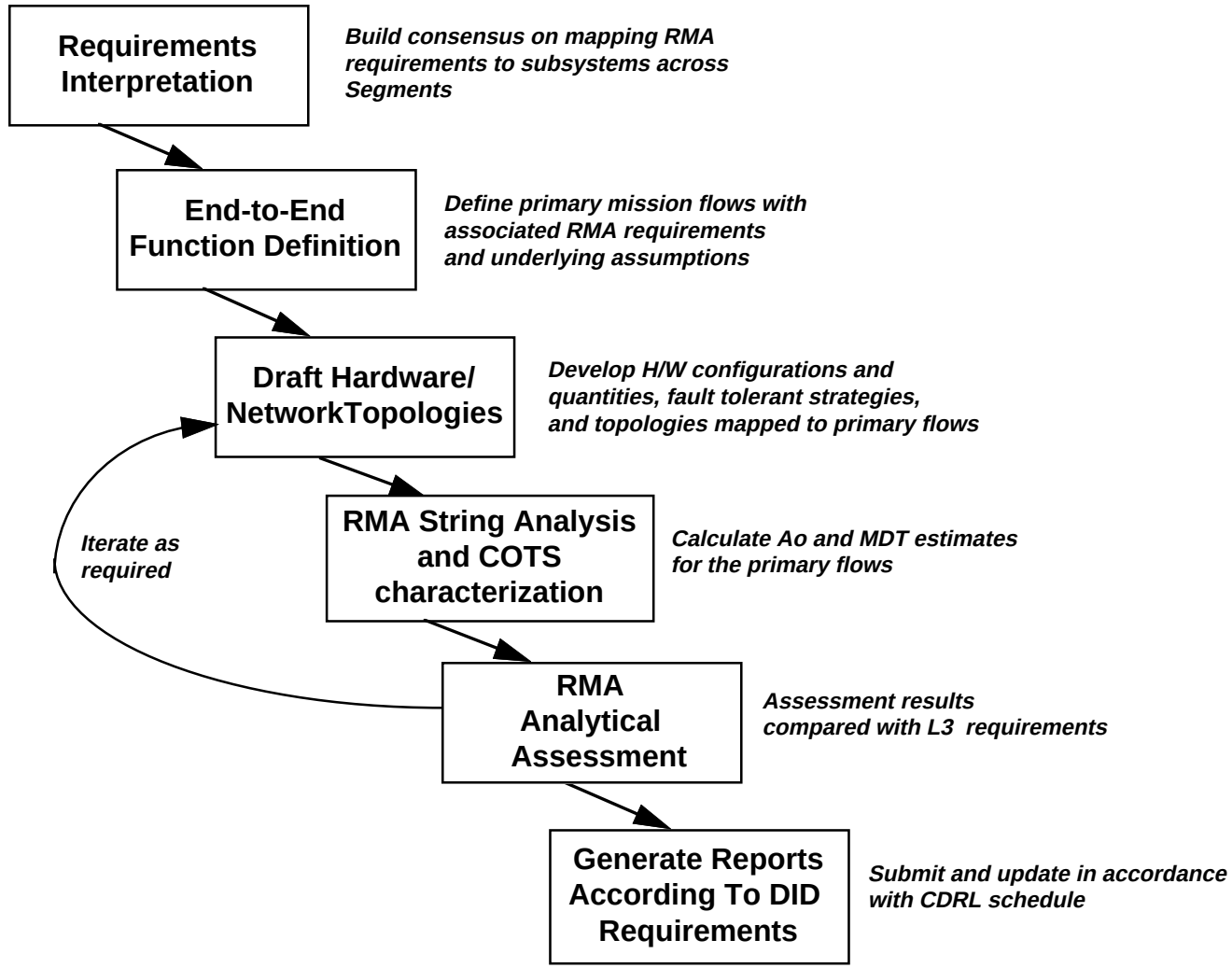

Example Of Mapping RMA Requirements To HWCIs

SDPS-CSMS HW Qty Vs Availability Requirements (Rel. A - LaRC Site)

	Req't No.	EOSD3900	EOSD3920	EOSD3930	EOSD3940	EOSD3960	EOSD3970	EOSD3980	EOSD3990	EOSD4000
	Description	Function of receiving science data:0.999,2 hrs	Function of archiving and distributing data:0.98, 2 hrs	The user interfaces to IMS services at individual DAAC sites: 0.993, 2 hrs	Function of Info. Searches on the ECS Directory: 0.993, 2 hrs	Function of Metadata Ingest and Update: 0.96, 4 hrs	Function of Info. Searches on Local Holdings: 0.96, 4 hrs	Function of Local Data Order Submission: 0.96,4 hrs	Function of Data Order Submission Across DAACs:0.96, 4 hrs . (Same as EOSD3980 plus Comm. Equipment)	Function of IMS DataBase Managemen t and Maintenanc e Interface: 0.96, 4 hrs
	Assumptions:	(L0 data only)	(Data other than L0)	(Via V0 gateway)	(Not a Rel A function)		(Data Server Level)			
HWCI Name/Subsystem	**Component Class**	**#Req'd/Tot**	**#R/Tot.**	**#R/Tot.**	**#R/Tot.**	**#R/Tot.**	**#R/Tot.**	**#R/Tot.**	**#R/Tot.**	**#R/Tot.**
DMGHW/Data Manag.	DBMS Server			1/2	1/2				1/2	1/2
DMGHW/Data Manag.	Data Specialist W/S					1/3		1/3	1/3	
DMGHW/Data Manag.	OPS W/S									1/1
ICLHW / Ingest	ServerHost W/S - 8mm tape	1/2				1/2				
ICLHW / Ingest	RAIDDisk (host attached)	1/1				1/1				
ICLHW / Ingest	X-Terminal	1/2(share w/data server w/s)				1/2				
ACMHW/DataServ	APC Server Host		1/2	1/2	1/2	1/2	1/2	1/2	1/2	
ACMHW/Data Serv.	APC RAID (host attached)		1/1	1/1	1/1	1/1	1/1	1/1	1/1	
ACMHW/Data Serv.	OPS W/S									1/2
DIPHW/Data Server	Dist. Server Host		1/2			1/2				
DIPHW/Data Server	Dist.RAID (host attached)		1/1			1/1				
DIPHW / Data Server	8mmTape Stacker w/drives		1/2,ea w/4drvs							
DIPHW/Data Server	6250Tape Drive		1/1							
DIPHW/Data Server	CD-ROMJukebox		1/1							
DIPHW/Data Server	LaserPrinter (network) (2)									

Example Of Mapping RMA Requirements To HWCIs (Cont)

SDPS-CSMS HW Qty Vs Availability Requirements (LaRC Site) Cont'd

	Req't No.	EOSD3900	EOSD3920	EOSD3930	EOSD3940	EOSD3960	EOSD3970	EOSD3980	EOSD3990	EOSD4000
	Description	Function of receiving science data:0.999,2 hrs	Function of archiving and distributing data:0.98, 2 hrs	The user interfaces to IMS services at individual DAAC sites: 0.993, 2 hrs	Function of Info. Searches on the ECS Directory: 0.993, 2 hrs	Function of Metadata Ingest and Update: 0.96, 4 hrs	Function of Info. Searches on Local Holdings: 0.96, 4 hrs	Function of Local Data Order Submission: 0.96,4 hrs	Function of Data Order Submission Across DAACs:0.96, 4 hrs	Function of IMS DataBase Management and Maintenance Interface: 0.96, 4 hrs
HWCI Name/Subsystem	**Component Class**	**#Req'd/Tot**	**#R/Tot.**	**#R/Tot.**	**#R/Tot.**	**#R/Tot.**	**#R/Tot.**	**#R/Tot.**	**#R/Tot.**	**#R/Tot.**
WKSHW/Data Serv.	RAIDDisk (host attached)		1/1							
DRPHW/Data Serv.	FSMS Server		1/2							
DRPHW/Data Serv.	DBMS RAID		1/1	1/1		1/1	1/1			1/1
DRPHW/Data Serv.	DBMS Server		1/2	1/2		1/2	1/2			1/2
DRPHW/Data Serv.	Document Server		1/2							
DRPHW/Data Serv.	Archive Robot.		1/1							
DRPHW/Data Serv.	LinearMag.Driv. (Archive)		1/2							
SPRHW/ Proces.	Science Proc. (1/2)									
SPRHW/ Proces.	RAID(1/2)									
SPRHW/ Proces.	Queuing Server (1/1)									
SPRHW/ Proces.	X Term (3)									
AITHW/ Proces.	AIT W/S (1)									
AITHW/ Proces.	AIT WS/DBMS Server (1)									
AITHW/ Proces.	AIT Printer (1)									
PLNHW / Planning	Planning W/S (1)									
PLNHW / Planning	DBMS Server (1)									
MSS-CSS/LSM	MSS/CSS Server	1/2	1/2	1/2	1/2	1/2	1/2	1/2	1/2	1/2
MSS/LSM	MSS W/S (2)									
Concentrator/ISS	FDDI Concentrator	1/2 +1/2	1/2 +1/2	1/2 +1/2	1/2 +1/2	1/2 +1/2	1/2 +1/2	1/2 +1/2	1/2 +1/2	1/2 + 1/2
FDDI Switch/ISS	FDDI Switch	1	1	1	1	1	1	1	1	1

RMA COTS Data and Documentation Flow

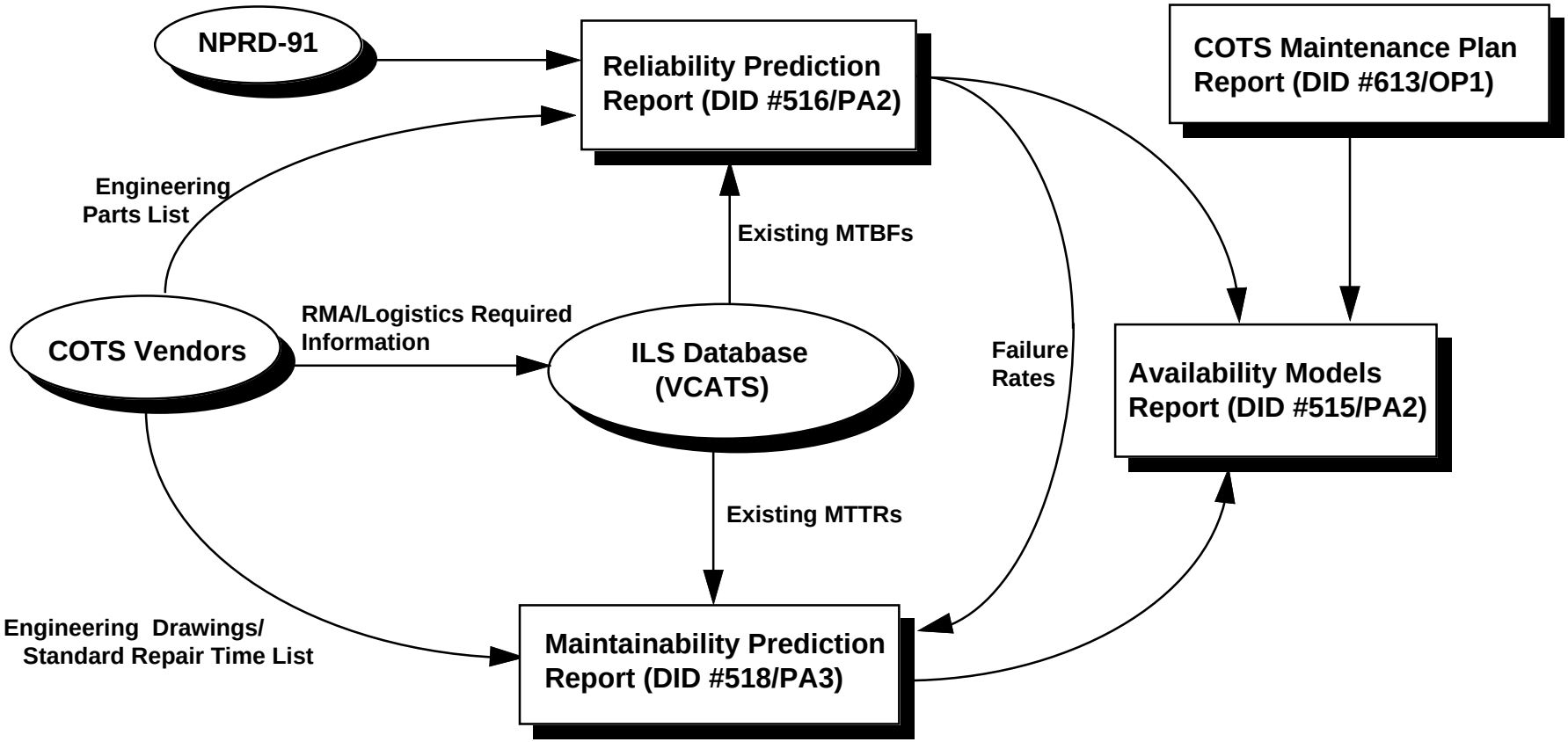

RMA Measures

- **Hardware:**
  - 1 of 2 Warm Standby Redundant Host Servers
  - Crossed-Strapped Critical Storage RAID
  - On-Line Redundant Linear Drive for Archive Robot
  - Fail-Soft Processors
  - FDDI Switch Internally Redundant
  - Dual-Attached FDDI and Fault Tolerant FDDI Networks For Critical Functions

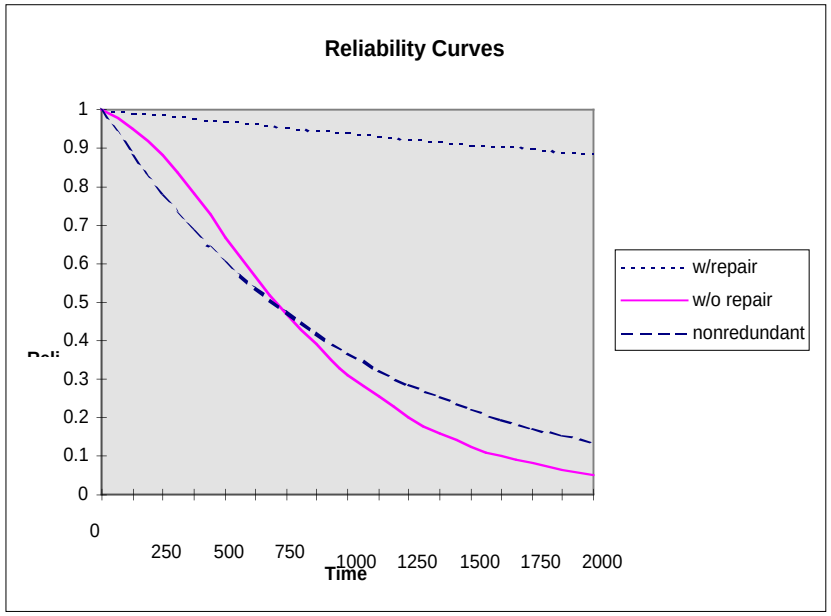

- **Software:**
  - Modularity
  - Object-Oriented Programming

- **Logistics:**
  - On-Line Repair (ie. RAID, Linear Drive and FDDI Hot Swappable Modules)
  - Sparing High Failure Rate LRUs at DAAC Sites for Single Point Of Failure Equipment
  - Conducting Self-Maintenance where RMA Requirements Dictate

ECS Availability Modeling Assumptions

Assumptions Agreed To At PDR:

- **Availability Calculations Only Apply To Hardware Configurations During Staffed Hours of Operation**
- **EBNet-Owned Equipment Is Not Part Of the RMA Calculations**
- **RMA Data Was Based On COTS vendors and/or HAIS Predictions**
- **Availability Results Were Calculated Using The Reliability With Repair Model For Redundant System (The Einhorn Equations)**
- **Software Availability = 1.0 for Analysis**
  - **Software and Hardware Will Be Measured During System Test and Operation**

ECS RMA Math Models

- **Operational Availability:** $Ao = \frac{MTBM}{MTBM + MDT}$

- **Mean Time Between Maintenance (MTBM):** $\frac{1}{MTBM} = \frac{1}{MTBPM} + \frac{1}{MTBCM}$

- **Mean Down Time (MDT):** *MDT = MTTR + ALDT*

- **Mean Time To Repair (MTTR):** $MTTR = \frac{\sum_{i=1}^{i=n} \lambda i Mcti}{\sum_{i=1}^{i=n} \lambda i}$

- **System with Active On-Line Redundancies (Hot Backup):**

$$\text{Availability } (A_o) = \frac{MTBF_R}{MTBF_R + MTTR_R}$$

$$MTBF_R = MTBF_i \times \left(\frac{MTBF_i}{MTTR_i}\right)^{n-r} \times \frac{(n-r)!(r-1)!}{n!}$$

$$MTTR_R = \frac{MTTR_i}{n - r + 1}$$

- **System with Inactive Off-Line Redundancies (Warm Standby):**

$$MTBF_R = \frac{\mu + n(P+1)\lambda}{n[n\lambda + (1-P)\mu\lambda]}$$

$$\mu = \frac{1}{MDT + SwitchOverTime}$$

- **Duty Cycle :** Effective Failure Rate (F/R)=[Inherent F/R x Duty Cycle] +[Inherent F/R x (1-Duty Cycle) x 10%]

Sample Of Availability Input Table

EOSD3900: Function of Receiving Science Data (Ao=.9990, MDT=2.0 hrs)

Rel	Site	Subsys Descrip	Equipment Description	Model/Part Number	MTBF (hour)	MTTR (hour)	Admin Logis Delay Time (hour)	Switch-over Time (min)	Total Down-time (hour)	# of Units Rqrd (m)	Total # Of Units (n)	Redundancy	Unit Availability (Ai)	P	Redundant Group Availability (m out of n)
A	LaRC	Ingest	ICL Server Host (512 MB, 2 CPU,6GB)/8mm tape	SGI Challenge L/Exabyte	5,922	1.50	4	15.00	5.50	1	2	standby off-line	0.9990721	1.0	0.9999998
A	LaRC	Ingest	ICL Wrking Stor. (65 GB each, host attached)	SGI RAID 5	500,000	1.50	4	N/A	5.50	2	2	N/A	0.9999890	N/A	0.9999780
A	LaRC	Ingest	Ingest X-Terminal(shared w/Data Server w/s)	NCD Xterm	4,684	1.00	4	15.00	5.00	1	2	standby off-line	0.9989337	1.0	0.9999998
A	LaRC	LSM	MSS/CSS Server (256MB, 6GB)	HP755/125	23,900	1.00	4	5.00	5.00	1	2	standby off-line	0.9997908	1.0	1.0000000
A	LaRC	ISS	Concentrator (BayNetworks)	Synoptics 2914-04	100,000	0.50	4	1.00	4.50	1	2	standby off-line	0.9999550	1.0	1.0000000
A	LaRC	ISS	Concentrator (BayNetworks)	Synoptics 2914-04	100,000	0.50	4	1.00	4.50	1	2	standby off-line	0.9999550	1.0	1.0000000
A	LaRC	ISS	FDDI Switch	Atlantec Power Hub 7000	146,520	0.50	4	10.00	4.50	1	1	N/A	0.9999693	N/A	0.9999693

EOSD3900: Ao = 0.999946885
MDT = 0.246227726

Sample Of An RMA String: Function Of Receiving Science Data (EOSD3900)

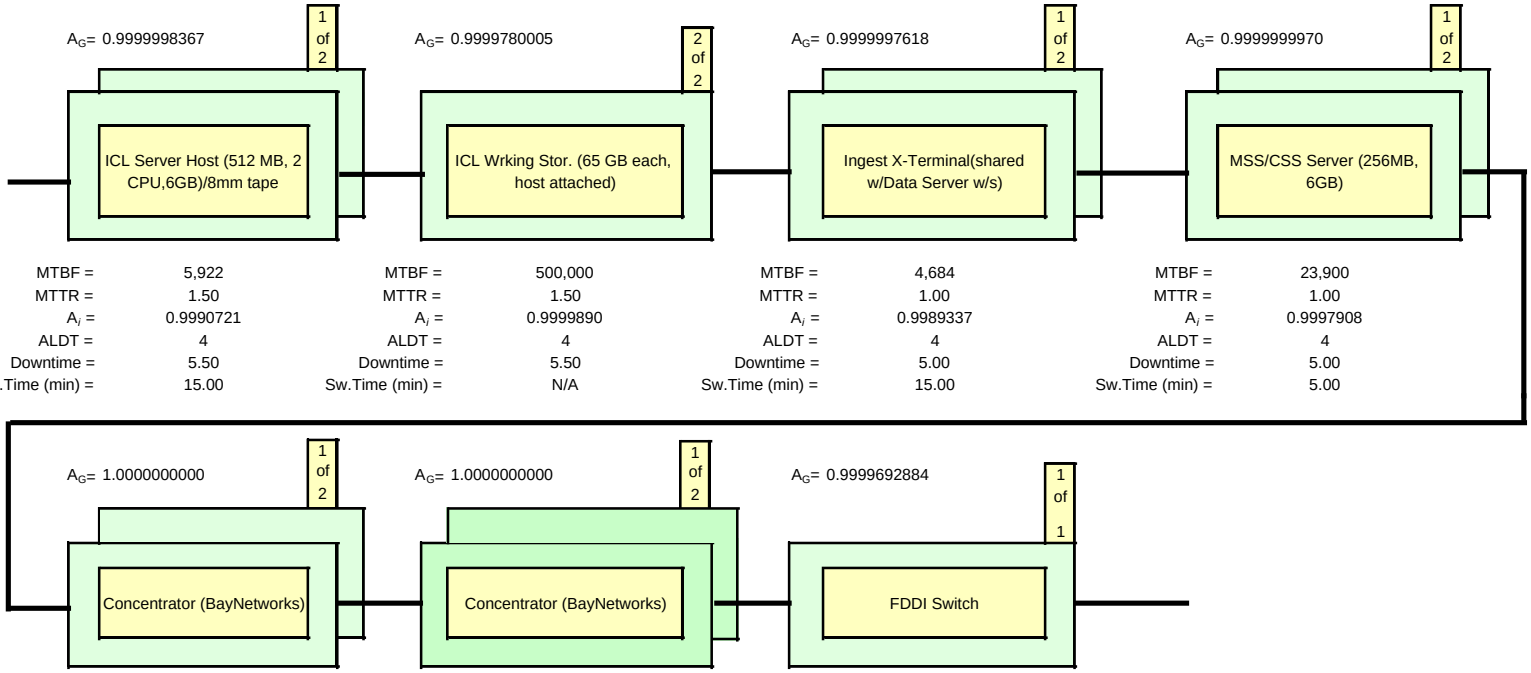

MTBF =	5,922	MTBF =	500,000	MTBF =	4,684	MTBF =	23,900
MTTR =	1.50	MTTR =	1.50	MTTR =	1.00	MTTR =	1.00
A_i =	0.9990721	A_i =	0.9999890	A_i =	0.9989337	A_i =	0.9997908
ALDT =	4	ALDT =	4	ALDT =	4	ALDT =	4
Downtime =	5.50	Downtime =	5.50	Downtime =	5.00	Downtime =	5.00
Sw.Time (min) =	15.00	Sw.Time (min) =	N/A	Sw.Time (min) =	15.00	Sw.Time (min) =	5.00

MTBF =	100,000	MTBF =	100,000	MTBF =	146,520
MTTR =	0.50	MTTR =	0.50	MTTR =	0.50
A_i =	0.9999550	A_i =	0.9999550	A_i =	0.9999693
ALDT =	4	ALDT =	4	ALDT =	4
Downtime =	4.50	Downtime =	4.50	Downtime =	4.50
Sw.Time (min) =	1.00	Sw.Time (min) =	1.00	Sw.Time (min) =	10.00

Release A CDR Ao and MDT Results Summary

- **Current Design Meets All RMA Requirements With Considerable Margin**
- **Margin Is Necessary To Allow The System To Grow And Meet Final Release Requirements**

Req't Nos. (Ao/MDT)	LaRC		MSFC		GSFC	
	Ao	MDT(hrs)	Ao	MDT(hrs)	Ao	MDT(hrs)
EOSD3700 (0.96/<4.0 hrs)	0.9976716	2.95	0.9967215	3.75	0.9959019	3.74
EOSD3800 (0.99980/<1.0 Min)	N/A	N/A	N/A	N/A	0.9999897	0.02
EOSD3810 (0.99925/<5.0 Min)	N/A	N/A	N/A	N/A	0.9999898	0.02
EOSD3900 (0.999/2.0 hrs)	0.9999469	0.25	0.9999469	0.25	N/A	N/A
EOSD3920 (0.98/<2.0 hrs)	0.9995683	0.48	0.9995418	0.50	0.9995418	0.50
EOSD3930 (0.993/<2.0 hrs)	0.9999470	0.24	0.9999470	0.24	0.9999470	0.24
EOSD3940 (0.993/<2.0 hrs)	0.9999582	0.20	0.9999582	0.20	0.9999582	0.20
EOSD3960 (0.96/<4.0 hrs)	0.9999135	0.26	0.9999135	0.26	0.9999135	0.26
EOSD3970 (0.96/<4.0 hrs)	0.9999470	0.24	0.9999470	0.24	0.9999470	0.24
EOSD3980 (0.96/<4.0 hrs)	0.9999582	0.17	0.9999582	0.17	0.9999582	0.17
EOSD3990 (0.96/<4.0 hrs)	0.9999582	0.19	0.9999582	0.19	0.9999582	0.19
EOSD4000 (0.96/<4.0 hrs)	0.9998241	0.49	0.9998241	0.49	0.9998241	0.49
EOSD4010 (Ao < 0.95)	0.9991776	N/A	0.9991776	N/A	0.9991776	N/A
EOSD4030 (.998/<20 Min)	0.9999693	0.08	0.9999693	0.08	0.9999693	0.08

Abbreviations and Acronyms

A_o	Operational Avaliability
ALDT	Administrative Logistic Delay Time
COTS	Commercial Off The Shelf
F/R	Failure Rate
GSFC	Goddard Space Flight Center
λ	Failure Rate Lambda in Failure Per Million Hours (FPMH)
λ_i	Failure Rate Lambda in Failure Per Million Hours (FPMH) for the ith unit
MDT	Mean Down Time
MTBCM	Mean Time Between Corrective Maintenance
MTBF	Mean Time Between Failure
$MTBF_i$	Mean Time Between Failure for the ith Unit
$MTBF_R$	Mean Time Between Failure for Redundant Group
MTBM	Mean Time Between Maintenance
MTBPM	Mean Time Between Preventive Maintenance
MTTR	Mean Time To Repair
$MTTR_i$	Mean Time To Repair for the ith Unit
$MTTR_R$	Mean Time To Repair for Redundant Group
n	Total Number Of Units in the System
NPRD	Nonelectronic Parts Reliability Data
N/A	Not Applicable
P	Probability of Switching from the Primary Unit To the Standby Unit
r	Number of Units Allowed To Fail
RMA	Reliability, Maintainability, Availability
μ	Repair rate (1/MTTR)
VCATS	Vendor Costing and Tracking System