Appendix A. Availability Data Worksheets/Block Diagrams and Analytical Results

Availability Data Worksheets using Excel format are shown in Appendix A and presented in availability requirement number sequence. Each requirement contains the following information:

Column Title	Description
Subsys Descrip	Subsystem Description
Equipment Description	Brief description of the equipment
Model/Part Number	The manufacturer's equipment model number and/or part number
MTBF	Mean Time Between Failure in hours
MTTR	Mean Time To Repair in hours
Admin Logis Delay Time	Administration Logistics Delay Time (ALDT) in hours
Switchover Time	Time required to switch from failed item to a back-up redundant item in minutes (where applicable)
Total Downtime	The MTTR + ALDT in hours
# of Units Rqrd	Minimum Number of Units Required (m) to be operational for the function to succeed
Total # of Units	Total number of units available (n)
Redundancy	The type of redundant unit (i.e. standby off-line, hot, cold; where applicable)
Unit Availability	Availability (A_i) of unit
P	Probability of successful switchover to the redundant unit (P=1.0; where applicable)
Redundant Group Availability	Group Availability with redundant items (m out of n) either on-line or off-line standby with repair

Last line totals	RMA requirement number; Total function's Availability (A_o) and MDT in hours

EOSD 3700 Ao/MDT Analytical Results for LaRC

EOSD3700: Function of Planning and Data Processing (Ao>=.96, MDT<=4.0 hrs)

Subsystem Description	Equipment Description	Model/Part Number	MTBF (hour)	MTTR (hour)	Admin. Logistic Delay Time (hour)	Switch over Time (min)	Total Downtime (hour)	Number of Units Required (m)	Total Number Of Units (n)	Redundancy	Unit Availability (Ai)	P	Redundant Group Availability (m out of n)
Science Proc,	SCIENCE PROCESSOR	SGI Pwr Chal. XL, 20 CPU, 2 GB, 12 GB, HiPPI	2,748	1.5	6	60.00	7.50	1	1	N/A	0.9972781709	N/A	0.997278171
Science Proc,	RAID DISK	SGI 144 GB	150,000	0.5	6	N/A	6.50	2	2	N/A	0.9999566685	N/A	0.999913341
Science Proc,	TAPE STACKER	3, 8mm Drives w/stacker - Exabyte	160,000	0.3	6	N/A	6.25	1	1	N/A	0.9999609390	N/A	0.999960939
Science Proc,	TAPE STACKER	3, 4mm Drives w/stacker - Exabyte	146,000	0.5	6	N/A	6.50	1	1	N/A	0.9999554814	N/A	0.999955481
Science Proc,	X TERMINAL	X TERMINAL, NCD HMX Pro, 16 MB RAM	27,548	0.5	6	5.00	6.50	4	5	standby off-line	0.9997641039	1.0	0.999999982
Science Proc,	SCIENCE PROCESSOR	SGI Pwr Chal.XL, 12 CPU, 2 GB, 12 GB, HiPPI, 4mm	3,458	1.5	6	60.00	7.50	1	1	N/A	0.9978358101	N/A	0.997835810
Science Proc,	RAID	SGI 68 GB	150,000	0.5	6	N/A	6.00	1	1	N/A	0.9999600016	N/A	0.999960002
Science Proc,	SCIENCE PROCESSOR	SGI Power Challenge XL, 18 CPU, 2 GB RAM, 12 GB, HiPPI	2,896	1.5	6	60.00	7.50	1	1	N/A	0.9974169106	N/A	0.997416911
Science Proc,	RAID	SGI 102 GB	150,000	0.5	6	N/A	6.50	1	1	N/A	0.9999566685	N/A	0.999956669
Science Proc,	QUEUING SVR/RAID	SUN Sparc 20/712/ 12 GB RAID	3,660	1.0	6	5.00	7.00	1	2	standby off-line	0.9980910826	1.0	0.999999825
Planning	PLN DBMS SVR/RAID	SUN Sparc 20/712/ 12 GB RAID	3,660	1.0	6	5.00	7.00	1	2	standby off-line	0.9980910826	1.0	0.999999825
													0.9922973684
		EOSD3700 Ao =	0.99230										
		EOSD3700 MDT =	0.778821										

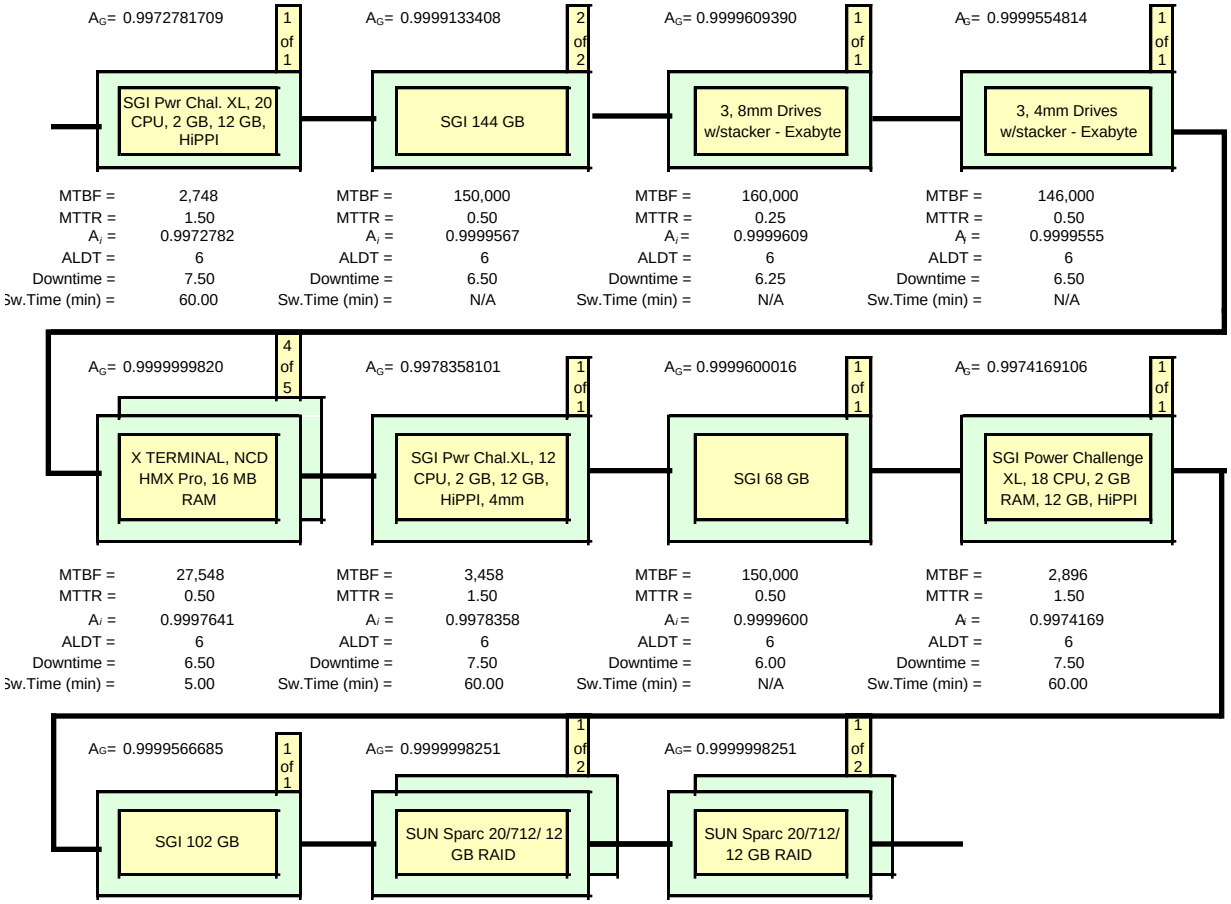
AG= 0.9972781709
1 of 1
SGI Pwr Chal. XL, 20 CPU, 2 GB, 12 GB, HiPPI
MTBF = 2,748
MTTR = 1.50
Ai = 0.9972782
ALDT = 6
Downtime = 7.50
Sw.Time (min) = 60.00
AG= 0.9999133408
2 of 2
SGI 144 GB
MTBF = 150,000
MTTR = 0.50
Ai = 0.9999567
ALDT = 6
Downtime = 6.50
Sw.Time (min) = N/A
AG= 0.9999609390
1 of 1
3, 8mm Drives w/stacker - Exabyte
MTBF = 160,000
MTTR = 0.25
Ai = 0.9999609
ALDT = 6
Downtime = 6.25
Sw.Time (min) = N/A
AG= 0.9999554814
1 of 1
3, 4mm Drives w/stacker - Exabyte
MTBF = 146,000
MTTR = 0.50
Ai = 0.9999555
ALDT = 6
Downtime = 6.50
Sw.Time (min) = N/A
AG= 0.9999999820
4 of 5
X TERMINAL, NCD HMX Pro, 16 MB RAM
MTBF = 27,548
MTTR = 0.50
Ai = 0.9997641
ALDT = 6
Downtime = 6.50
Sw.Time (min) = 5.00
AG= 0.9978358101
1 of 1
SGI Pwr Chal.XL, 12 CPU, 2 GB, 12 GB, HiPPI, 4mm
MTBF = 3,458
MTTR = 1.50
Ai = 0.9978358
ALDT = 6
Downtime = 7.50
Sw.Time (min) = 60.00
AG= 0.9999600016
1 of 1
SGI 68 GB
MTBF = 150,000
MTTR = 0.50
Ai = 0.9999600
ALDT = 6
Downtime = 6.00
Sw.Time (min) = N/A
AG= 0.9974169106
1 of 1
SGI Power Challenge XL, 18 CPU, 2 GB RAM, 12 GB, HiPPI
MTBF = 2,896
MTTR = 1.50
Ai = 0.9974169
ALDT = 6
Downtime = 7.50
Sw.Time (min) = 60.00
AG= 0.9999566685
1 of 1
SGI 102 GB
MTBF = 150,000
MTTR = 0.50
Ai = 0.9999567
ALDT = 6
Downtime = 6.50
Sw.Time (min) = N/A
AG= 0.9999998251
1 of 2
SUN Sparc 20/712/ 12 GB RAID
MTBF = 3,660
MTTR = 1.00
Ai = 0.9980911
ALDT = 6
Downtime = 7.00
Sw.Time (min) = 5.00
AG= 0.9999998251
1 of 2
SUN Sparc 20/712/ 12 GB RAID
MTBF = 3,660
MTTR = 1.00
Ai = 0.9980911
ALDT = 6
Downtime = 7.00
Sw.Time (min) = 5.00

EOSD 3900 Ao/MDT Analytical Results for LaRC

EOSD3900: Function of Receiving Science Data (Ao>=.9990, MDT<=2.0 hrs)

Subsystem Description	Equipment Description	Model/Part Number	MTBF (hour)	MTTR (hour)	Admin. Logistic Delay Time (hour)	Switch over Time (min)	Total Downtime (hour)	Number of Units Required (m)	Total Number Of Units (n)	Redundancy	Unit Availability (Ai)	P	Redundant Group Availability (m out of n)
Ingest	RAID	SGI 102 GB RAID	150,000	0.5	6	N/A	6.50	1	1	N/A	0.9999566685	N/A	0.999956669
Ingest	INGEST SVR/8mm Drives	SGI Challenge L, 4 CPU/3 8mm drives	6,444	1.5	6	5.00	7.50	1	2	standby off-line	0.9988374797	1.0	1.000000000
Ingest	X TERM.(Red.w/DatSvr W/S)	X TERMINAL, NCD HMX Pro, 16 MB RAM	27,548	0.5	6	5.00	6.50	1	2	standby off-line	0.9997641039	1.0	1.000000000
Ingest	ARCHIVE ROBOTICS(1)	ARCHIVE ROBOTICS - 1 Tower, 1 Arm	28,048	1.0	6	N/A	7.00	1	1	N/A	0.9997504901	N/A	0.999750490
Ingest	LINEAR MAG DR(2)	NTP Linear Tape Drive, 3590	40,000	1.0	6	15.00	7.00	1	2	standby off-line	0.9998250306	1.0	0.999999995
MSS/CSS	MSS/CSS SERVER	HP J210, 4 CPU, 256 MB, 4 GB	20000	2.5	6	5.00	8.50	1	2	standby off-line	0.9995751805	1.0	0.999999993
MSS	RAID	HP 36 GB RAID	150,000	0.5	6	N/A	6.50	1	1	N/A	0.9999566685	N/A	0.999956669
MSS	MSS WS	SUN Sparcstation 20/50, 128 MB, 4GB	15,947	0.5	6	5.00	6.50	1	2	standby off-line	0.9995925659	1.0	0.999999991
ISS	FDDI CONCENTRATOR	FDDI Concentrator - Bay Networks 2914-04	100,000	0.5	6	5.00	6.50	1	2	standby off-line	0.9999350042	1.0	1.000000000
ISS	FDDI CONCENTRATOR	FDDI Concentrator - Bay Networks 2914-04	100,000	0.5	6	5.00	6.50	2	3	standby off-line	0.9999350042	1.0	1.000000000
ISS	FDDI SWITCH	PowerHub7000 - ALANTEC (4 FDDI cards & 3 pwr supply)	146,000	0.5	6	N/A	6.50	1	1	N/A	0.9999554814	N/A	0.999955481
													0.9996638297

EOSD3900 Ao = 0.99966
EOSD3900 MDT = 0.92799

Note: (1) Robot Failure Rate is 25% Duty cycle
(2) Tape Drive Failure Rate is 25% Duty cycle

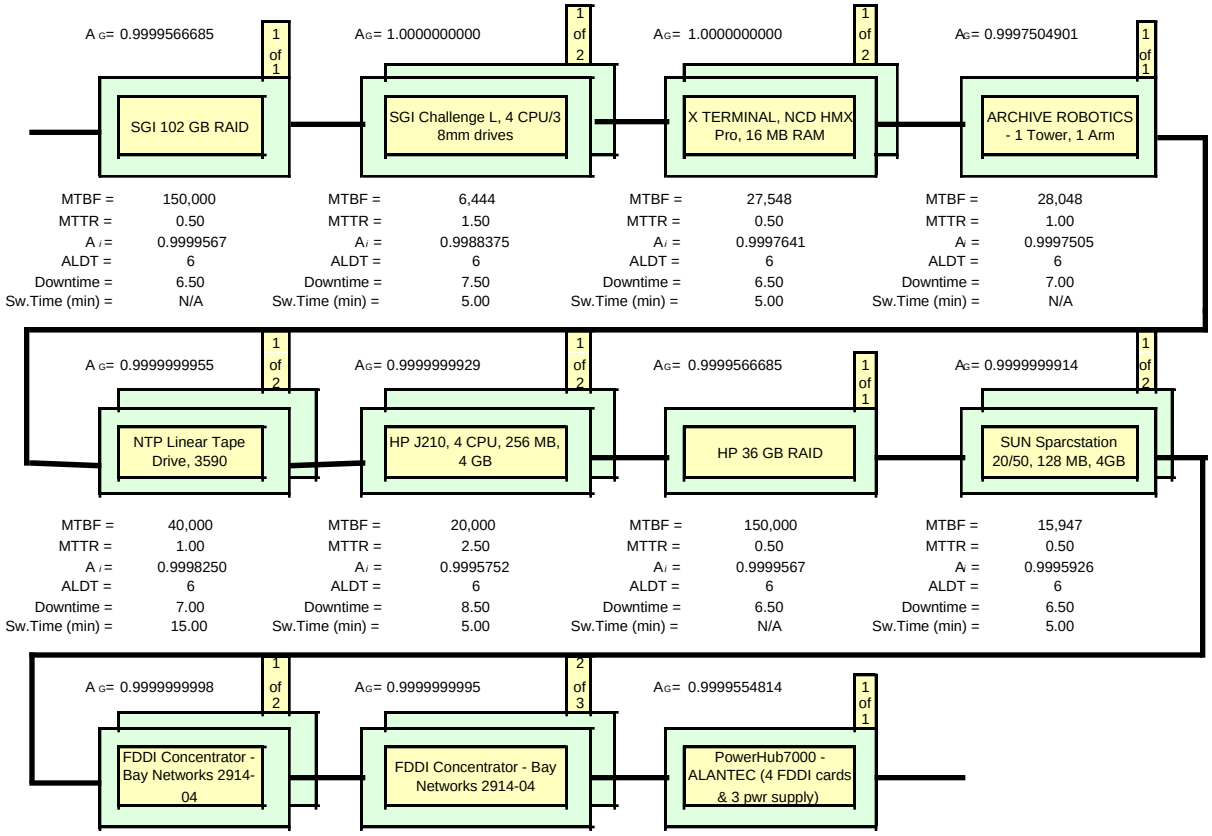
A G= 0.9999566685
1 of 1
SGI 102 GB RAID
MTBF = 150,000
MTTR = 0.50
A i = 0.9999567
ALDT = 6
Downtime = 6.50
Sw.Time (min) = N/A
AG= 1.0000000000
1 of 2
SGI Challenge L, 4 CPU/3 8mm drives
MTBF = 6,444
MTTR = 1.50
Ai = 0.9988375
ALDT = 6
Downtime = 7.50
Sw.Time (min) = 5.00
AG= 1.0000000000
1 of 2
X TERMINAL, NCD HMX Pro, 16 MB RAM
MTBF = 27,548
MTTR = 0.50
Ai = 0.9997641
ALDT = 6
Downtime = 6.50
Sw.Time (min) = 5.00
AG= 0.9997504901
1 of 1
ARCHIVE ROBOTICS - 1 Tower, 1 Arm
MTBF = 28,048
MTTR = 1.00
Ai = 0.9997505
ALDT = 6
Downtime = 7.00
Sw.Time (min) = N/A
A G= 0.9999999955
1 of 2
NTP Linear Tape Drive, 3590
MTBF = 40,000
MTTR = 1.00
A i = 0.9998250
ALDT = 6
Downtime = 7.00
Sw.Time (min) = 15.00
AG= 0.9999999929
1 of 2
HP J210, 4 CPU, 256 MB, 4 GB
MTBF = 20,000
MTTR = 2.50
Ai = 0.9995752
ALDT = 6
Downtime = 8.50
Sw.Time (min) = 5.00
AG= 0.9999566685
1 of 1
HP 36 GB RAID
MTBF = 150,000
MTTR = 0.50
Ai = 0.9999567
ALDT = 6
Downtime = 6.50
Sw.Time (min) = N/A
AG= 0.9999999914
1 of 2
SUN Sparcstation 20/50, 128 MB, 4GB
MTBF = 15,947
MTTR = 0.50
Ai = 0.9995926
ALDT = 6
Downtime = 6.50
Sw.Time (min) = 5.00
A G= 0.9999999998
1 of 2
FDDI Concentrator - Bay Networks 2914-04
MTBF = 100,000
MTTR = 0.50
A i = 0.9999350
ALDT = 6
Downtime = 6.50
Sw.Time (min) = 5.00
AG= 0.9999999995
2 of 3
FDDI Concentrator - Bay Networks 2914-04
MTBF = 100,000
MTTR = 0.50
Ai = 0.9999350
ALDT = 6
Downtime = 6.50
Sw.Time (min) = 5.00
AG= 0.9999554814
1 of 1
PowerHub7000 - ALANTEC (4 FDDI cards & 3 pwr supply)
MTBF = 146,000
MTTR = 0.50
Ai = 0.9999555
ALDT = 6
Downtime = 6.50
Sw.Time (min) = N/A

EOSD 3920 Ao/MDT Analytical Results for LaRC

EOSD3920:Function of Archiving And Distributing Data (Ao>=.980, MDT<=2.0 hrs)

Subsystem Description	Equipment Description	Model/Part Number	MTBF (hour)	MTTR (hour)	Admin. Logistic Delay Time (hour)	Switch over Time (min)	Total Downtime (hour)	Number of Units Required (m)	Total Number Of Units (n)	Redundancy	Unit Availability (Ai)	P	Redundant Group Availability (m out of n)
ACM	APC SERVER	SGI Challenge L, 4 CPU, 256 MB RAM, 4 GB	6,714	1.5	6	5.00	7.50	1	2	standby off-line	0.9988841776	1.0	0.999999944
ACM	RAID DISK	480 GB	150,000	0.5	6	N/A	6.50	1	1	N/A	0.9999566685	N/A	0.999956669
ACM	OPS WORKSTATION	Sun Sparc 20/50, 64 MB RAM, 4 GB	15,947	0.5	6	5.00	6.50	1	2	standby off-line	0.9995925659	1.0	0.999999991
DIP	DISTRIBUTION SERVER	SUN Sparc 20/712, 256 MB RAM, 6 GB	3,752	1.0	6	5.00	7.00	1	2	standby off-line	0.9981378026	1.0	0.999999834
DIP	RAID DISK	240 GB	150,000	0.5	6	N/A	6.50	1	1	N/A	0.9999566685	N/A	0.999956669
DIP	TAPE STACKER	3, 8mm Drives w/stacker - Exabyte	160,000	0.3	6	N/A	6.25	1	1	N/A	0.9999609390	N/A	0.999960939
DIP	TAPE STACKER	3, 4mm Drives w/stacker - Exabyte	146,000	0.5	6	N/A	6.50	1	1	N/A	0.9999554814	N/A	0.999955481
DIP	CD ROM (1)	CD ROM, Recordable, JVC	58,392	0.5	6	N/A	6.50	1	1	N/A	0.9998886958	N/A	0.999888696
DIP	TAPE DRIVE (1)	3480/3490 TAPE DRIVE	140,000	0.5	6	N/A	6.50	1	1	N/A	0.9999535736	N/A	0.999953574
DIP	TAPE DRIVE (1)	6250 BPI Tape Drive	66,868	1.0	6	N/A	7.00	1	1	N/A	0.9998953271	N/A	0.999895327
WKS	WKS HOST	SGI Challenge L, 4 CPU, 256 MB RAM, 4 GB	6,714	1.5	6	5.00	7.50	1	2	standby off-line	0.9988841776	1.0	0.999999944
WKS	RAID DISK	SGI 360 GB	150,000	0.5	6	N/A	6.50	1	1	N/A	0.9999566685	N/A	0.999956669
DRP	FSMS SERVER	SGI Challenge XL, 4 CPU, 512 MB RAM, 6 GB	4,664	1.5	6	5.00	7.50	1	2	standby off-line	0.9983945200	1.0	0.999999885
DRP	RAID DISK	68 GB	150,000	0.5	6	N/A	6.50	1	1	N/A	0.9999566685	N/A	0.999956669
DRP	ARCHIVE ROBOTICS (2)	EMASS, Model 2, Tall Quadro Tower, 2 Arms)	10,502	1.0	6	N/A	7.00	2	2	N/A	0.9993339043	N/A	0.998668695
DRP	TAPE DRIVE (2)	3590 Tape Drive (10 each per archive robotics)	16,667	1.0	6	10.00	7.00	19	20	standby off-line	0.9995801847	1.0	0.999998309
DRP	DBMS SERVER	SGI Challenge XL, 2 CPU, 256 MB RAM, 6 GB	5,109	1.5	6	5.00	7.50	1	2	standby off-line	0.9985341542	1.0	0.999999904
DRP	RAID DISK	27 GB	150,000	0.5	6	N/A	6.50	1	1	N/A	0.9999566685	N/A	0.999956669
DDS	DOCUMENT SERVER	SUN Sparcstation 20/712, 256MB, 6GB	3,752	1.0	6	5.00	7.00	1	2	standby off-line	0.9981378026	1.0	0.999999834
DDS	DOCUMENT SVR RAID	6GB	150,000	0.5	6	N/A	6.50	1	1	N/A	0.9999566685	N/A	0.999956669
MSS/CSS	MSS/CSS SERVER	HP J210, 4 CPU, 256 MB, 4 GB	20000	2.5	6	5.00	8.50	1	2	standby off-line	0.9995751805	1.0	0.999999993
MSS	RAID	HP 36 GB RAID	150,000	0.5	6	N/A	6.50	1	1	N/A	0.9999566685	N/A	0.999956669

EOSD 3920 Ao/MDT Analytical Results for LaRC (continued)

A_G = 0.9999999442 (1 of 2)	A_G = 0.9999566685 (1 of 1)	A_G = 0.9999999914 (1 of 2)	A_G = 0.9999998335 (1 of 2)
SGI Challenge L, 4 CPU, 256 MB RAM, 4	480 GB	Sun Sparc 20/50, 64 MB RAM, 4 GB	SUN Sparc 20/712, 256 MB RAM, 6 GB
MTBF = 6,714	MTBF = 150,000	MTBF = 15,947	MTBF = 3,752
MTTR = 1.50	MTTR = 0.50	MTTR = 0.50	MTTR = 1.00
A_i = 0.9988842	A_i = 0.9999567	A_i = 0.9995926	A_i = 0.9981378
ALDT = 6	ALDT = 6	ALDT = 6	ALDT = 6
Downtime = 7.50	Downtime = 6.50	Downtime = 6.50	Downtime = 7.00
Sw.Time (min) = 5.00	Sw.Time (min) = N/A	Sw.Time (min) = 5.00	Sw.Time (min) = 5.00

A_G = 0.9999566685 (1 of 1)	A_G = 0.9999609390 (1 of 1)	A_G = 0.9999554814 (1 of 1)	A_G = 0.9998886958 (1 of 1)
240 GB	3, 8mm Drives w/stacker - Exabyte	3, 4mm Drives w/stacker - Exabyte	CD ROM, Recordable, JVC
MTBF = 150,000	MTBF = 160,000	MTBF = 146,000	MTBF = 58,392
MTTR = 0.50	MTTR = 0.25	MTTR = 0.50	MTTR = 0.50
A_i = 0.9999567	A_i = 0.9999609	A_i = 0.9999555	A_i = 0.9998887
ALDT = 6	ALDT = 6	ALDT = 6	ALDT = 6
Downtime = 6.50	Downtime = 6.25	Downtime = 6.50	Downtime = 6.50
Sw.Time (min) = N/A	Sw.Time (min) = N/A	Sw.Time (min) = N/A	Sw.Time (min) = N/A

A_G = 0.9999535736 (1 of 1)	A_G = 0.9998953271 (1 of 1)	A_G = 0.9999999442 (1 of 2)	A_G = 0.9999566685 (1 of 1)
3480/3490 TAPE DRIVE	6250 BPI Tape Drive	SGI Challenge L, 4 CPU, 256 MB RAM, 4	SGI 360 GB
MTBF = 140,000	MTBF = 66,868	MTBF = 6,714	MTBF = 150,000
MTTR = 0.50	MTTR = 1.00	MTTR = 1.50	MTTR = 0.50
A_i = 0.9999536	A_i = 0.9998953	A_i = 0.9988842	A_i = 0.9999567
ALDT = 6	ALDT = 6	ALDT = 6	ALDT = 6
Downtime = 6.50	Downtime = 7.00	Downtime = 7.50	Downtime = 6.50
Sw.Time (min) = N/A	Sw.Time (min) = N/A	Sw.Time (min) = 5.00	Sw.Time (min) = N/A

A_G = 0.9999998845 (1 of 2)	A_G = 0.9999566685 (1 of 1)	A_G = 0.9986686953 (2 of 2)	A_G = 0.9999983092 (19 of 20)
SGI Challenge XL, 4 CPU, 512 MB RAM, 6	68 GB	EMASS, Model 2, Tall Quadro Tower, 2 Arms)	3590 Tape Drive (10 each per archive
MTBF = 4,664	MTBF = 150,000	MTBF = 10,502	MTBF = 16,667
MTTR = 1.50	MTTR = 0.50	MTTR = 1.00	MTTR = 1.00
A_i = 0.9983945	A_i = 0.9999567	A_i = 0.9993339	A_i = 0.9995802
ALDT = 6	ALDT = 6	ALDT = 6	ALDT = 6
Downtime = 7.50	Downtime = 6.50	Downtime = 7.00	Downtime = 7.00
Sw.Time (min) = 5.00	Sw.Time (min) = N/A	Sw.Time (min) = N/A	Sw.Time (min) = 10.00

A_G = 0.9999999037 (1 of 2)	A_G = 0.9999566685 (1 of 1)	A_G = 0.9999998335 (1 of 2)	A_G = 0.9999566685 (1 of 1)
SGI Challenge XL, 2 CPU, 256 MB RAM, 6	27 GB	SUN Sparcstation 20/712, 256MB, 6GB	6GB
MTBF = 5,109	MTBF = 150,000	MTBF = 3,752	MTBF = 150,000
MTTR = 1.50	MTTR = 0.50	MTTR = 1.00	MTTR = 0.50
A_i = 0.9985342	A_i = 0.9999567	A_i = 0.9981378	A_i = 0.9999567
ALDT = 6	ALDT = 6	ALDT = 6	ALDT = 6
Downtime = 7.50	Downtime = 6.50	Downtime = 7.00	Downtime = 6.50
Sw.Time (min) = 5.00	Sw.Time (min) = N/A	Sw.Time (min) = 5.00	Sw.Time (min) = N/A

A_G = 0.9999999929 (1 of 2)	A_G = 0.9999566685 (1 of 1)	A_G = 0.9999999914 (1 of 2)	A_G = 0.9999999998 (1 of 2)
HP J210, 4 CPU, 256 MB, 4 GB	HP 36 GB RAID	SUN Sparcstation 20/50, 128 MB, 4GB	FDDI Concentrator - Bay Networks 2914-
MTBF = 20,000	MTBF = 150,000	MTBF = 15,947	MTBF = 100,000
MTTR = 2.50	MTTR = 0.50	MTTR = 0.50	MTTR = 0.50
A_i = 0.9995752	A_i = 0.9999567	A_i = 0.9995926	A_i = 0.9999350
ALDT = 6	ALDT = 6	ALDT = 6	ALDT = 6
Downtime = 8.50	Downtime = 6.50	Downtime = 6.50	Downtime = 6.50
Sw.Time (min) = 5.00	Sw.Time (min) = N/A	Sw.Time (min) = 5.00	Sw.Time (min) = 5.00

A_G = 0.9999999995 (2 of 3)	A_G = 0.9999554814 (1 of 1)
FDDI Concentrator - Bay Networks 2914-04	PowerHub7000 - ALANTEC (4 FDDI
MTBF = 100,000	MTBF = 146,000
MTTR = 0.50	MTTR = 0.50
A_i = 0.9999350	A_i = 0.9999555
ALDT = 6	ALDT = 6
Downtime = 6.50	Downtime = 6.50
Sw.Time (min) = 5.00	Sw.Time (min) = N/A

EOSD 3930 Ao/MDT Analytical Results for LaRC

EOSD3930: User Interfaces to IMS Services at Individual DAAC Site (Ao>=.993, MDT<=2.0 hrs)

Subsystem Description	Equipment Description	Model/Part Number	MTBF (hour)	MTTR (hour)	Admin. Logistic Delay Time (hour)	Switchover Time (min)	Total Downtime (hour)	Number of Units Required (m)	Total Number Of Units (n)	Redundancy	Unit Availability (Ai)	P	Redundant Group Availability (m out of n)
Data Manag.	DMG SERVER	K400, 2 CPU, 512 MB RAM, 8 GB, 8 mm	22,747	2.7	6	N/A	8.70	1	1	N/A	0.9996176782	N/A	0.999617678
Data Manag.	RAID DISK	HP 10 GB	150,000	0.5	6	N/A	6.50	1	1	N/A	0.9999566685	N/A	0.999956669
ACM	APC SERVER	SGI Challenge L, 4 CPU, 256 MB RAM, 4 GB	6,714	1.5	6	5.00	7.50	1	2	standby off-line	0.9988841776	1.0	0.999999944
ACM	RAID DISK	480 GB	150,000	0.5	6	N/A	6.50	1	1	N/A	0.9999566685	N/A	0.999956669
ACM	OPS WORKSTATION	Sun Sparc 20/50, 64 MB RAM, 4 GB	15,947	0.5	6	5.00	6.50	1	2	standby off-line	0.9995925659	1.0	0.999999991
DRP	DBMS SERVER	SGI Challenge XL, 2 CPU, 256 MB RAM, 6 GB	5,109	1.5	6	5.00	7.50	1	2	standby off-line	0.9985341542	1.0	0.999999904
DRP	RAID DISK	27 GB	150,000	0.5	6	N/A	6.50	1	1	N/A	0.9999566685	N/A	0.999956669
MSS/CSS	MSS/CSS SERVER	HP J210, 4 CPU, 256 MB, 4 GB	20000	2.5	6	5.00	8.50	1	2	standby off-line	0.9995751805	1.0	0.999999993
MSS	RAID	HP 36 GB RAID	150,000	0.5	6	N/A	6.50	1	1	N/A	0.9999566685	N/A	0.999956669
MSS	MSS WS	SUN Sparcstation 20/50, 128 MB, 4GB	15,947	0.5	6	5.00	6.50	1	2	standby off-line	0.9995925659	1.0	0.999999991
ISS	FDDI CONCENTRATOR	FDDI Concentrator - Bay Networks 2914-04	100,000	0.5	6	5.00	6.50	1	2	standby off-line	0.9999350042	1.0	1.000000000
ISS	FDDI CONCENTRATOR	FDDI Concentrator - Bay Networks 2914-04	100,000	0.5	6	5.00	6.50	2	3	standby off-line	0.9999350042	1.0	1.000000000
ISS	FDDI SWITCH	PowerHub7000 - ALANTEC (4 FDDI cards & 3 pwr supply)	146,000	0.5	6	N/A	6.50	1	1	N/A	0.9999554814	N/A	0.999955481
													0.9998253213

EOSD3930 Ao =	0.99983
EOSD3930 MDT =	0.38722

EOSD 3930 Ao/MDT Analytical Results for LaRC (continued)

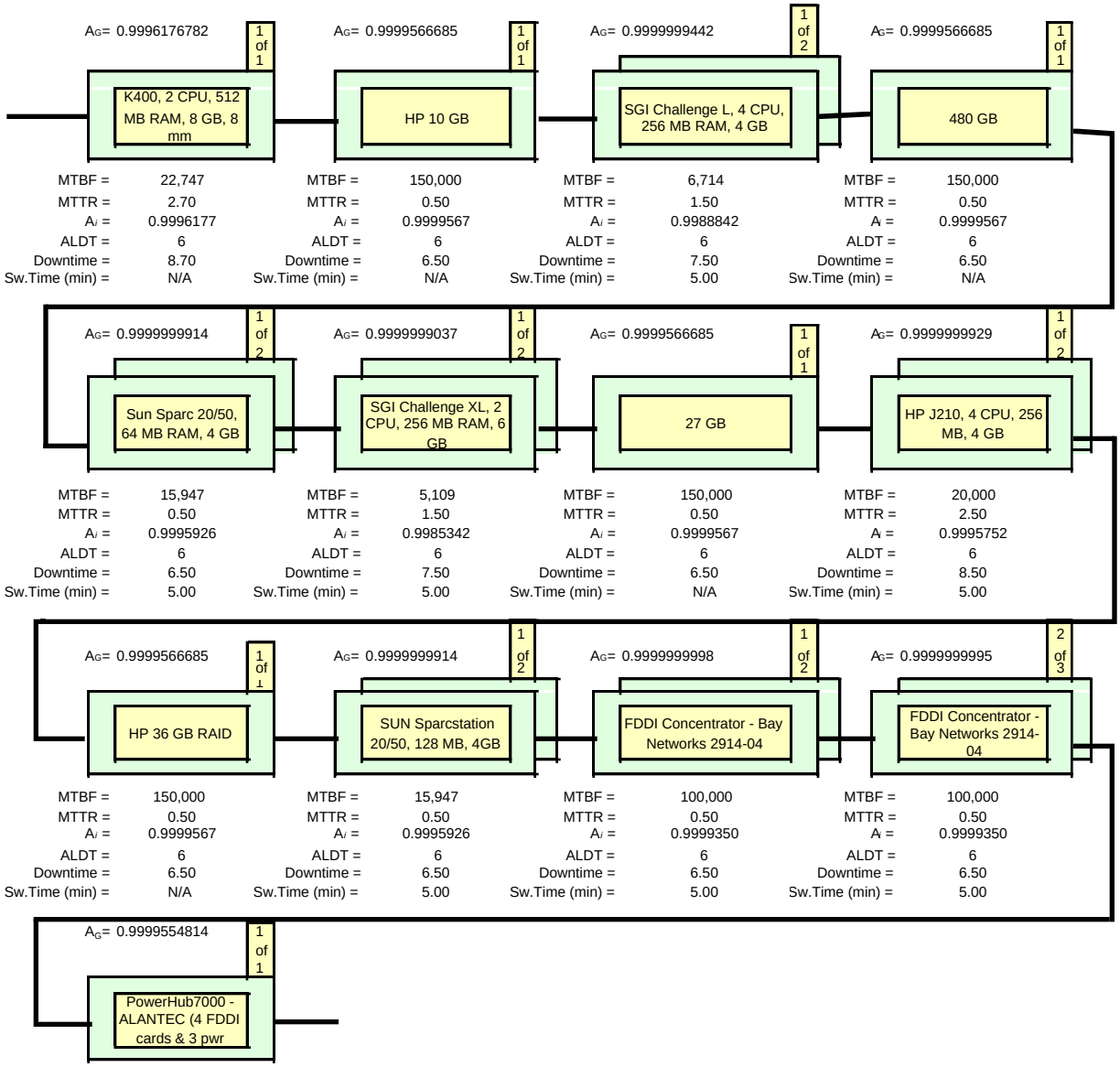

EOSD 3940 Ao/MDT Analytical Results for LaRC

EOSD3940: Function Of Information Searches On The ECS Directory(Ao>=.993, MDT<=2.0 hrs)

Subsystem Description	Equipment Description	Model/Part Number	MTBF (hour)	MTTR (hour)	Admin. Logistic Delay Time (hour)	Switchover Time (min)	Total Downtime (hour)	Number of Units Required (m)	Total Number Of Units (n)	Redundancy	Unit Availability (Ai)	P	Redundant Group Availability (m out of n)
Data Manag.	DMG SERVER	K400, 2 CPU, 512 MB RAM, 8 GB, 8 mm	22,747	2.7	6	N/A	8.70	1	1	N/A	0.9996176782	N/A	0.999617678
Data Manag.	RAID DISK	HP 10 GB	150,000	0.5	6	N/A	6.50	1	1	N/A	0.9999566685	N/A	0.999956669
ACM	APC SERVER	SGI Challenge L, 4 CPU, 256 MB RAM, 4 GB	6,714	1.5	6	5.00	7.50	1	2	standby off-line	0.9988841776	1.0	0.999999944
ACM	RAID DISK	480 GB	150,000	0.5	6	N/A	6.50	1	1	N/A	0.9999566685	N/A	0.999956669
ACM	OPS WORKSTATION	Sun Sparc 20/50, 64 MB RAM, 4 GB	15,947	0.5	6	5.00	6.50	1	2	standby off-line	0.9995925659	1.0	0.999999991
MSS/CSS	MSS/CSS SERVER	HP J210, 4 CPU, 256 MB, 4 GB	20000	2.5	6	5.00	8.50	1	2	standby off-line	0.9995751805	1.0	0.999999993
MSS	RAID	HP 36 GB RAID	150,000	0.5	6	N/A	6.50	1	1	N/A	0.9999566685	N/A	0.999956669
MSS	MSS WS	SUN Sparcstation 20/50, 128 MB, 4GB	15,947	0.5	6	5.00	6.50	1	2	standby off-line	0.9995925659	1.0	0.999999991
ISS	FDDI CONCENTRATOR	FDDI Concentrator - Bay Networks 2914-04	100,000	0.5	6	5.00	6.50	1	2	standby off-line	0.9999350042	1.0	1.000000000
ISS	FDDI CONCENTRATOR	FDDI Concentrator - Bay Networks 2914-04	100,000	0.5	6	5.00	6.50	2	3	standby off-line	0.9999350042	1.0	1.000000000
ISS	FDDI SWITCH	PowerHub7000 - ALANTEC (4 FDDI cards & 3 pwr supply)	146,000	0.5	6	N/A	6.50	1	1	N/A	0.9999554814	N/A	0.999955481
													0.9998687434

EOSD3940 Ao =	0.99987
EOSD3940 MDT =	0.43859

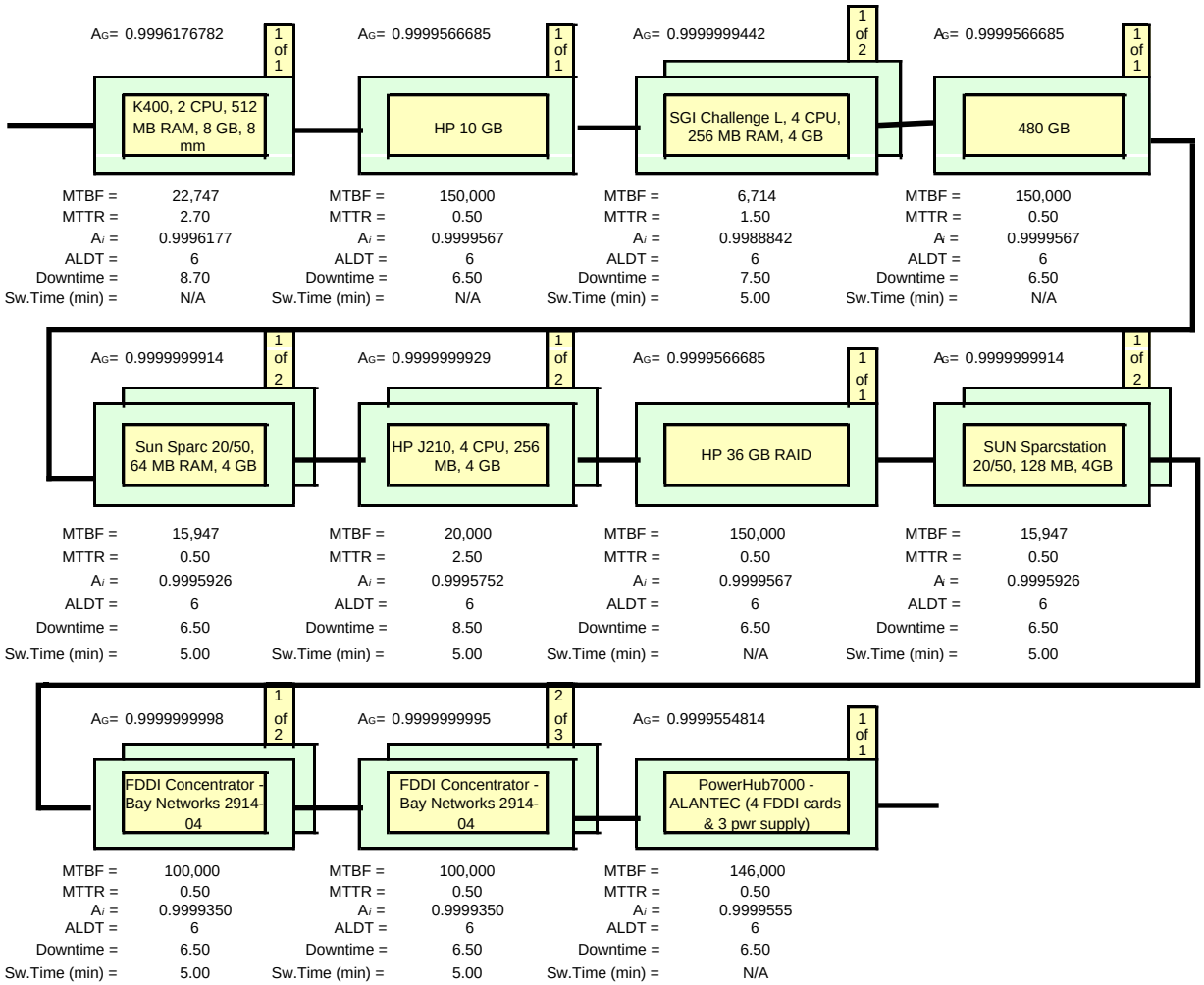
AG= 0.9996176782
1 of 1
K400, 2 CPU, 512 MB RAM, 8 GB, 8 mm
MTBF = 22,747
MTTR = 2.70
Ai = 0.9996177
ALDT = 6
Downtime = 8.70
Sw.Time (min) = N/A
AG= 0.9999566685
1 of 1
HP 10 GB
MTBF = 150,000
MTTR = 0.50
Ai = 0.9999567
ALDT = 6
Downtime = 6.50
Sw.Time (min) = N/A
AG= 0.9999999442
1 of 2
SGI Challenge L, 4 CPU, 256 MB RAM, 4 GB
MTBF = 6,714
MTTR = 1.50
Ai = 0.9988842
ALDT = 6
Downtime = 7.50
Sw.Time (min) = 5.00
AG= 0.9999566685
1 of 1
480 GB
MTBF = 150,000
MTTR = 0.50
Ai = 0.9999567
ALDT = 6
Downtime = 6.50
Sw.Time (min) = N/A
AG= 0.9999999914
1 of 2
Sun Sparc 20/50, 64 MB RAM, 4 GB
MTBF = 15,947
MTTR = 0.50
Ai = 0.9995926
ALDT = 6
Downtime = 6.50
Sw.Time (min) = 5.00
AG= 0.9999999929
1 of 2
HP J210, 4 CPU, 256 MB, 4 GB
MTBF = 20,000
MTTR = 2.50
Ai = 0.9995752
ALDT = 6
Downtime = 8.50
Sw.Time (min) = 5.00
AG= 0.9999566685
1 of 1
HP 36 GB RAID
MTBF = 150,000
MTTR = 0.50
Ai = 0.9999567
ALDT = 6
Downtime = 6.50
Sw.Time (min) = N/A
AG= 0.9999999914
1 of 2
SUN Sparcstation 20/50, 128 MB, 4GB
MTBF = 15,947
MTTR = 0.50
Ai = 0.9995926
ALDT = 6
Downtime = 6.50
Sw.Time (min) = 5.00
AG= 0.9999999998
1 of 2
FDDI Concentrator - Bay Networks 2914-04
MTBF = 100,000
MTTR = 0.50
Ai = 0.9999350
ALDT = 6
Downtime = 6.50
Sw.Time (min) = 5.00
AG= 0.9999999995
2 of 3
FDDI Concentrator - Bay Networks 2914-04
MTBF = 100,000
MTTR = 0.50
Ai = 0.9999350
ALDT = 6
Downtime = 6.50
Sw.Time (min) = 5.00
AG= 0.9999554814
1 of 1
PowerHub7000 - ALANTEC (4 FDDI cards & 3 pwr supply)
MTBF = 146,000
MTTR = 0.50
Ai = 0.9999555
ALDT = 6
Downtime = 6.50
Sw.Time (min) = N/A

EOSD 3960 Ao/MDT Analytical Results for LaRC

EOSD3960:Function Of MetaData Ingest and Update (Ao>=.96, MDT<=4.0 hrs)

Subsystem Description	Equipment Description	Model/Part Number	MTBF (hour)	MTTR (hour)	Admin. Logistic Delay Time (hour)	Switchover Time (min)	Total Downtime (hour)	Number of Units Required (m)	Total Number Of Units (n)	Redundancy	Unit Availability (Ai)	P	Redundant Group Availability (m out of n)
Data Manag.	DATA SPECIALIST W/S	SUN Sparc 20/50, 64 MB RAM, 6 GB	15,947	0.5	6	5.00	6.50	1	3	standby off-line	0.9995925659	1.0	1.000000000
Ingest	RAID	SGI 102 GB RAID	150,000	0.5	6	N/A	6.50	1	1	N/A	0.9999566685	N/A	0.999956669
Ingest	INGEST SVR/8mm Drives	SGI Challenge L, 4 CPU/3 8mm drives	6,444	1.5	6	5.00	7.50	1	2	standby off-line	0.9988374797	1.0	1.000000000
Ingest	X TERM.(Red.w/DatSvr W/S)	X TERMINAL, NCD HMX Pro, 16 MB RAM	27,548	0.5	6	5.00	6.50	1	2	standby off-line	0.9997641039	1.0	1.000000000
Ingest	ARCHIVE ROBOTICS(1)	ARCHIVE ROBOTICS - 1 Tower, 1 Arm	28,048	1.0	6	N/A	7.00	1	1	N/A	0.9997504901	N/A	0.999750490
Ingest	LINEAR MAG DR(2)	NTP Linear Tape Drive, 3590	40,000	1.0	6	15.00	7.00	1	2	standby off-line	0.9998250306	1.0	0.999999995
ACM	APC SERVER	SGI Challenge L, 4 CPU, 256 MB RAM, 4 GB	6,714	1.5	6	5.00	7.50	1	2	standby off-line	0.9988841776	1.0	0.999999944
ACM	RAID DISK	480 GB	150,000	0.5	6	N/A	6.50	1	1	N/A	0.9999566685	N/A	0.999956669
ACM	OPS WORKSTATION	Sun Sparc 20/50, 64 MB RAM, 4 GB	15,947	0.5	6	5.00	6.50	1	2	standby off-line	0.9995925659	1.0	0.999999991
DIP	DISTRIBUTION SERVER	SUN Sparc 20/712, 256 MB RAM, 6 GB	3,752	1.0	6	5.00	7.00	1	2	standby off-line	0.9981378026	1.0	0.999999834
DIP	RAID DISK	240 GB	150,000	0.5	6	N/A	6.50	1	1	N/A	0.9999566685	N/A	0.999956669
DRP	DBMS SERVER	SGI Challenge XL, 2 CPU, 256 MB RAM, 6 GB	5,109	1.5	6	5.00	7.50	1	2	standby off-line	0.9985341542	1.0	0.999999904
DRP	RAID DISK	27 GB	150,000	0.5	6	N/A	6.50	1	1	N/A	0.9999566685	N/A	0.999956669
MSS/CSS	MSS/CSS SERVER	HP J210, 4 CPU, 256 MB, 4 GB	20000	2.5	6	5.00	8.50	1	2	standby off-line	0.9995751805	1.0	0.999999993
MSS	RAID	HP 36 GB RAID	150,000	0.5	6	N/A	6.50	1	1	N/A	0.9999566685	N/A	0.999956669
MSS	MSS WS	SUN Sparcstation 20/50, 128 MB, 4GB	15,947	0.5	6	5.00	6.50	1	2	standby off-line	0.9995925659	1.0	0.999999991
ISS	FDDI CONCENTRATOR	FDDI Concentrator - Bay Networks 2914-04	100,000	0.5	6	5.00	6.50	1	2	standby off-line	0.9999350042	1.0	1.000000000
ISS	FDDI CONCENTRATOR	FDDI Concentrator - Bay Networks 2914-04	100,000	0.5	6	5.00	6.50	1	2	standby off-line	0.9999350042	1.0	1.000000000
ISS	FDDI CONCENTRATOR	FDDI Concentrator - Bay Networks 2914-04	100,000	0.5	6	5.00	6.50	2	3	standby off-line	0.9999350042	1.0	1.000000000
ISS	FDDI SWITCH	PowerHub7000 - ALANTEC (4 FDDI cards & 3 pwr supply)	146,000	0.5	6	N/A	6.50	1	1	N/A	0.9999554814	N/A	0.999955481
													0.9997818308

EOSD3960 Ao = 0.99978
EOSD3960 MDT = 0.33631

Note: (1) Robot Failure Rate is 25% Duty cycle
(2) Tape Drive Failure Rate is 25% Duty cycle

EOSD 3960 Ao/MDT Analytical Results for LaRC (continued)

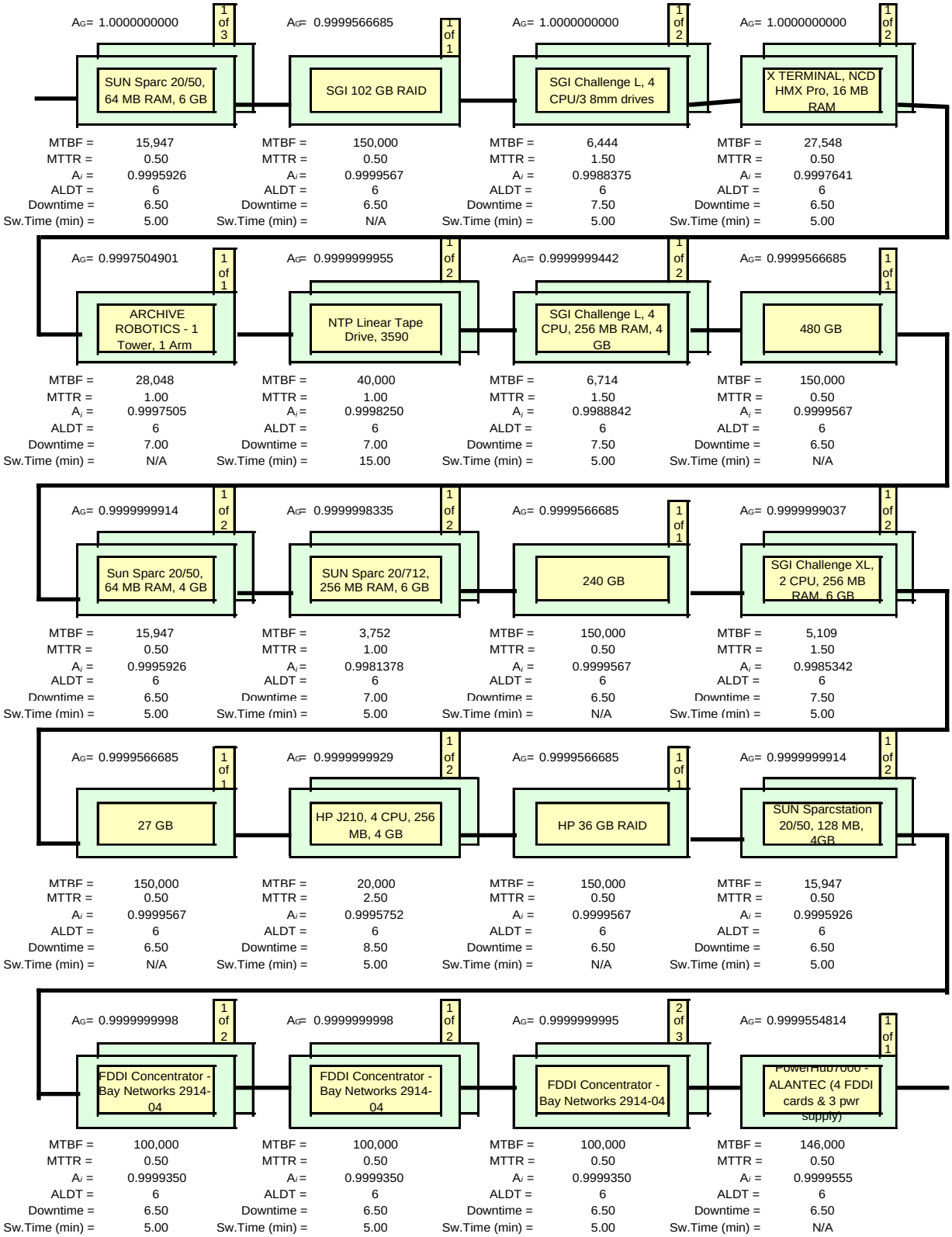

EOSD 3970 Ao/MDT Analytical Results for LaRC

EOSD3970: Function Of Info. Searches On Local Holdings (Ao>=.96, MDT<=4.0 hrs)

Subsystem Description	Equipment Description	Model/Part Number	MTBF (hour)	MTTR (hour)	Admin. Logistic Delay Time (hour)	Switch over Time (min)	Total Downtime (hour)	Number of Units Required (m)	Total Number Of Units (n)	Redundancy	Unit Availability (Ai)	P	Redundant Group Availability (m out of n)
ACM	APC SERVER	SGI Challenge L, 4 CPU, 256 MB RAM, 4 GB	6,714	1.5	6	5.00	7.50	1	2	standby off-line	0.9988841776	1.0	0.999999944
ACM	RAID DISK	480 GB	150,000	0.5	6	N/A	6.50	1	1	N/A	0.9999566685	N/A	0.999956669
ACM	OPS WORKSTATION	Sun Sparc 20/50, 64 MB RAM, 4 GB	15,947	0.5	6	5.00	6.50	1	2	standby off-line	0.9995925659	1.0	0.999999991
DRP	DBMS SERVER	SGI Challenge XL, 2 CPU, 256 MB RAM, 6 GB	5,109	1.5	6	5.00	7.50	1	2	standby off-line	0.9985341542	1.0	0.999999904
DRP	RAID DISK	27 GB	150,000	0.5	6	N/A	6.50	1	1	N/A	0.9999566685	N/A	0.999956669
MSS/CSS	MSS/CSS SERVER	HP J210, 4 CPU, 256 MB, 4 GB	20000	2.5	6	5.00	8.50	1	2	standby off-line	0.9995751805	1.0	0.999999993
MSS	RAID	HP 36 GB RAID	150,000	0.5	6	N/A	6.50	1	1	N/A	0.9999566685	N/A	0.999956669
MSS	MSS WS	SUN Sparcstation 20/50, 128 MB, 4GB	15,947	0.5	6	5.00	6.50	1	2	standby off-line	0.9995925659	1.0	0.999999991
ISS	FDDI CONCENTRATOR	FDDI Concentrator - Bay Networks 2914-04	100,000	0.5	6	5.00	6.50	1	2	standby off-line	0.9999350042	1.0	1.000000000
ISS	FDDI CONCENTRATOR	FDDI Concentrator - Bay Networks 2914-04	100,000	0.5	6	5.00	6.50	2	3	standby off-line	0.9999350042	1.0	1.000000000
ISS	FDDI SWITCH	PowerHub7000 - ALANTEC (4 FDDI cards & 3 pwr supply)	146,000	0.5	6	N/A	6.50	1	1	N/A	0.9999554814	N/A	0.999955481
													0.9998253213
		EOSD3970 Ao =	0.99983										
		EOSD3970 MDT =	0.38722										

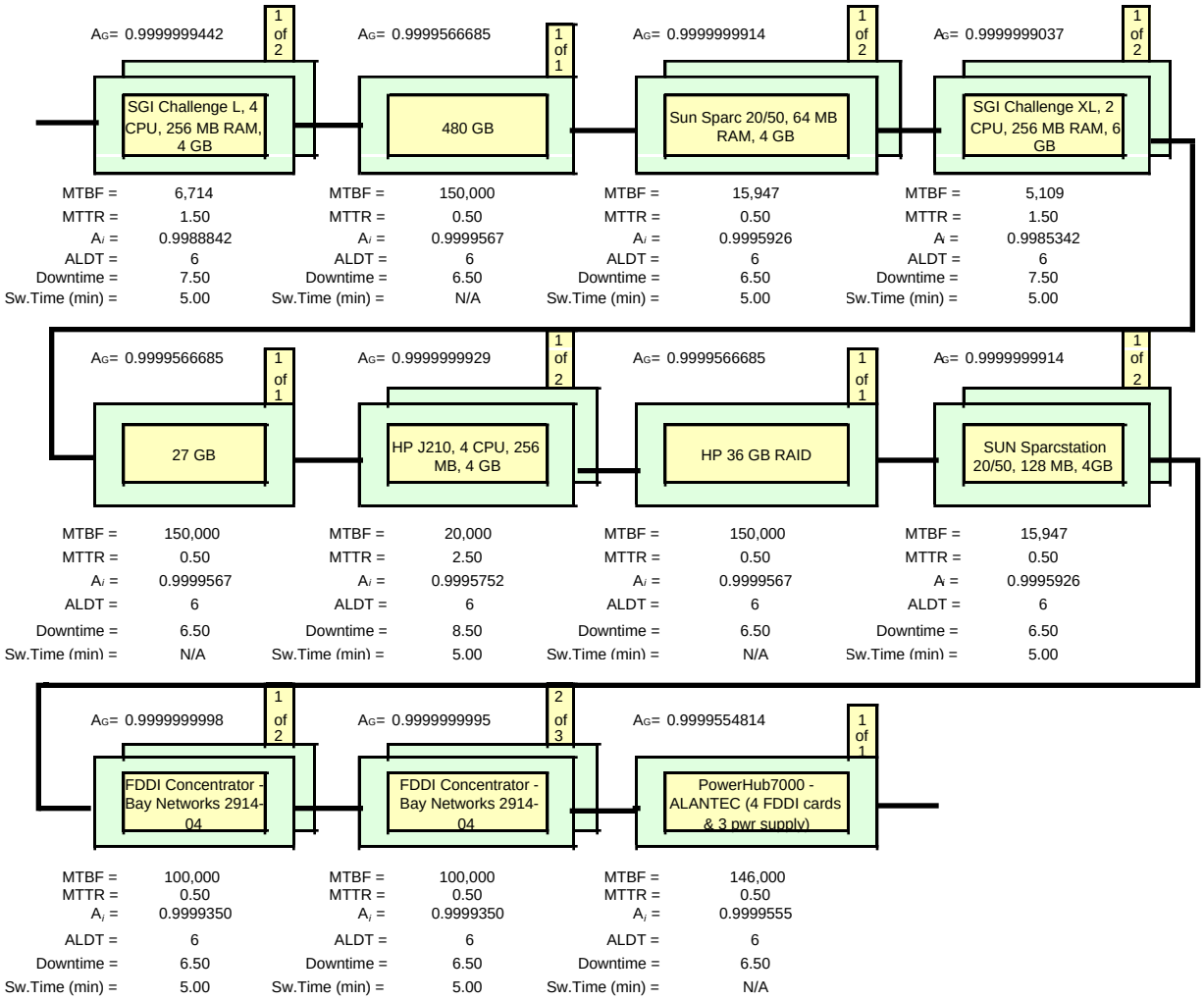
AG= 0.9999999442
1 of 2
SGI Challenge L, 4 CPU, 256 MB RAM, 4 GB
MTBF = 6,714
MTTR = 1.50
Ai = 0.9988842
ALDT = 6
Downtime = 7.50
Sw.Time (min) = 5.00
AG= 0.9999566685
1 of 1
480 GB
MTBF = 150,000
MTTR = 0.50
Ai = 0.9999567
ALDT = 6
Downtime = 6.50
Sw.Time (min) = N/A
AG= 0.9999999914
1 of 2
Sun Sparc 20/50, 64 MB RAM, 4 GB
MTBF = 15,947
MTTR = 0.50
Ai = 0.9995926
ALDT = 6
Downtime = 6.50
Sw.Time (min) = 5.00
AG= 0.9999999037
1 of 2
SGI Challenge XL, 2 CPU, 256 MB RAM, 6 GB
MTBF = 5,109
MTTR = 1.50
Ai = 0.9985342
ALDT = 6
Downtime = 7.50
Sw.Time (min) = 5.00
AG= 0.9999566685
1 of 1
27 GB
MTBF = 150,000
MTTR = 0.50
Ai = 0.9999567
ALDT = 6
Downtime = 6.50
Sw.Time (min) = N/A
AG= 0.9999999929
1 of 2
HP J210, 4 CPU, 256 MB, 4 GB
MTBF = 20,000
MTTR = 2.50
Ai = 0.9995752
ALDT = 6
Downtime = 8.50
Sw.Time (min) = 5.00
AG= 0.9999566685
1 of 1
HP 36 GB RAID
MTBF = 150,000
MTTR = 0.50
Ai = 0.9999567
ALDT = 6
Downtime = 6.50
Sw.Time (min) = N/A
AG= 0.9999999914
1 of 2
SUN Sparcstation 20/50, 128 MB, 4GB
MTBF = 15,947
MTTR = 0.50
Ai = 0.9995926
ALDT = 6
Downtime = 6.50
Sw.Time (min) = 5.00
AG= 0.9999999998
1 of 2
FDDI Concentrator - Bay Networks 2914-04
MTBF = 100,000
MTTR = 0.50
Ai = 0.9999350
ALDT = 6
Downtime = 6.50
Sw.Time (min) = 5.00
AG= 0.9999999995
2 of 3
FDDI Concentrator - Bay Networks 2914-04
MTBF = 100,000
MTTR = 0.50
Ai = 0.9999350
ALDT = 6
Downtime = 6.50
Sw.Time (min) = 5.00
AG= 0.9999554814
1 of 1
PowerHub7000 - ALANTEC (4 FDDI cards & 3 pwr supply)
MTBF = 146,000
MTTR = 0.50
Ai = 0.9999555
ALDT = 6
Downtime = 6.50
Sw.Time (min) = N/A

EOSD 3980 Ao/MDT Analytical Results for LaRC

EOSD3980: Function Of Local Data Order Submission (Ao>=.96, MDT<=4.0 hrs)

Subsystem Description	Equipment Description	Model/Part Number	MTBF (hour)	MTTR (hour)	Admin. Logistic Delay Time (hour)	Switchover Time (min)	Total Downtime (hour)	Number of Units Required (m)	Total Number Of Units (n)	Redundancy	Unit Availability (Ai)	P	Redundant Group Availability (m out of n)
Data Manag.	DATA SPECIALIST W/S	SUN Sparc 20/50, 64 MB RAM, 6 GB	15,947	0.5	6	5.00	6.50	1	3	standby off-line	0.9995925659	1.0	1.000000000
ACM	APC SERVER	SGI Challenge L, 4 CPU, 256 MB RAM, 4 GB	6,714	1.5	6	5.00	7.50	1	2	standby off-line	0.9988841776	1.0	0.999999944
ACM	RAID DISK	480 GB	150,000	0.5	6	N/A	6.50	1	1	N/A	0.9999566685	N/A	0.999956669
ACM	OPS WORKSTATION	Sun Sparc 20/50, 64 MB RAM, 4 GB	15,947	0.5	6	5.00	6.50	1	2	standby off-line	0.9995925659	1.0	0.999999991
MSS/CSS	MSS/CSS SERVER	HP J210, 4 CPU, 256 MB, 4 GB	20000	2.5	6	5.00	8.50	1	2	standby off-line	0.9995751805	1.0	0.999999993
MSS	RAID	HP 36 GB RAID	150,000	0.5	6	N/A	6.50	1	1	N/A	0.9999566685	N/A	0.999956669
MSS	MSS WS	SUN Sparcstation 20/50, 128 MB, 4GB	15,947	0.5	6	5.00	6.50	1	2	standby off-line	0.9995925659	1.0	0.999999991
ISS	FDDI CONCENTRATOR	FDDI Concentrator - Bay Networks 2914-04	100,000	0.5	6	5.00	6.50	1	2	standby off-line	0.9999350042	1.0	1.000000000
ISS	FDDI CONCENTRATOR	FDDI Concentrator - Bay Networks 2914-04	100,000	0.5	6	5.00	6.50	2	3	standby off-line	0.9999350042	1.0	1.000000000
ISS	FDDI SWITCH	PowerHub7000 - ALANTEC (4 FDDI cards & 3 pwr supply)	146,000	0.5	6	N/A	6.50	1	1	N/A	0.9999554814	N/A	0.999955481
													0.9998687434
		EOSD3980 Ao =	0.99987										
		EOSD3980 MDT =	0.43859										

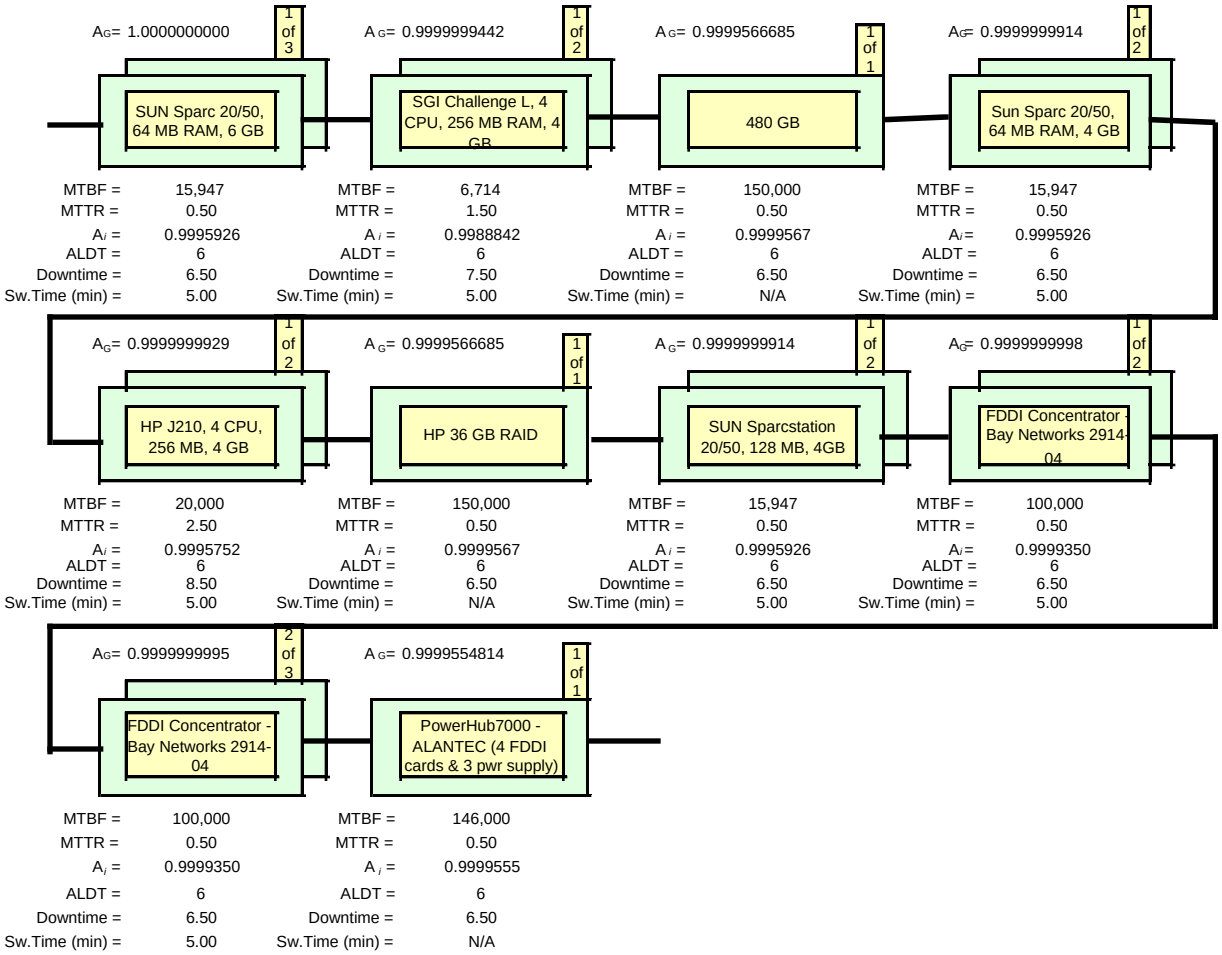
AG= 1.0000000000
1 of 3
SUN Sparc 20/50, 64 MB RAM, 6 GB
MTBF = 15,947
MTTR = 0.50
Ai = 0.9995926
ALDT = 6
Downtime = 6.50
Sw.Time (min) = 5.00
AG= 0.9999999442
1 of 2
SGI Challenge L, 4 CPU, 256 MB RAM, 4 GB
MTBF = 6,714
MTTR = 1.50
Ai = 0.9988842
ALDT = 6
Downtime = 7.50
Sw.Time (min) = 5.00
AG= 0.9999566685
1 of 1
480 GB
MTBF = 150,000
MTTR = 0.50
Ai = 0.9999567
ALDT = 6
Downtime = 6.50
Sw.Time (min) = N/A
AG= 0.9999999914
1 of 2
Sun Sparc 20/50, 64 MB RAM, 4 GB
MTBF = 15,947
MTTR = 0.50
Ai = 0.9995926
ALDT = 6
Downtime = 6.50
Sw.Time (min) = 5.00
AG= 0.9999999929
1 of 2
HP J210, 4 CPU, 256 MB, 4 GB
MTBF = 20,000
MTTR = 2.50
Ai = 0.9995752
ALDT = 6
Downtime = 8.50
Sw.Time (min) = 5.00
AG= 0.9999566685
1 of 1
HP 36 GB RAID
MTBF = 150,000
MTTR = 0.50
Ai = 0.9999567
ALDT = 6
Downtime = 6.50
Sw.Time (min) = N/A
AG= 0.9999999914
1 of 2
SUN Sparcstation 20/50, 128 MB, 4GB
MTBF = 15,947
MTTR = 0.50
Ai = 0.9995926
ALDT = 6
Downtime = 6.50
Sw.Time (min) = 5.00
AG= 0.9999999998
1 of 2
FDDI Concentrator - Bay Networks 2914-04
MTBF = 100,000
MTTR = 0.50
Ai = 0.9999350
ALDT = 6
Downtime = 6.50
Sw.Time (min) = 5.00
AG= 0.9999999995
2 of 3
FDDI Concentrator - Bay Networks 2914-04
MTBF = 100,000
MTTR = 0.50
Ai = 0.9999350
ALDT = 6
Downtime = 6.50
Sw.Time (min) = 5.00
AG= 0.9999554814
1 of 1
PowerHub7000 - ALANTEC (4 FDDI cards & 3 pwr supply)
MTBF = 146,000
MTTR = 0.50
Ai = 0.9999555
ALDT = 6
Downtime = 6.50
Sw.Time (min) = N/A

EOSD 3990 Ao/MDT Analytical Results for LaRC

EOSD3990: Function Of Data Order Submission Across DAACs (Ao<=.96, MDT>=4.0 hrs)

Subsystem Description	Equipment Description	Model/Part Number	MTBF (hour)	MTTR (hour)	Admin. Logistic Delay Time (hour)	Switch over Time (min)	Total Downtime (hour)	Number of Units Required (m)	Total Number Of Units (n)	Redundancy	Unit Availability (Ai)	P	Redundant Group Availability (m out of n)
Data Manag.	DMG SERVER	K400, 2 CPU, 512 MB RAM, 8 GB, 8 mm	22,747	2.7	6	N/A	8.70	1	1	N/A	0.9996176782	N/A	0.999617678
Data Manag.	RAID DISK	HP 10 GB	150,000	0.5	6	N/A	6.50	1	1	N/A	0.9999566685	N/A	0.999956669
Data Manag.	DATA SPECIALIST W/S	SUN Sparc 20/50, 64 MB RAM, 6 GB	15,947	0.5	6	5.00	6.50	1	3	standby off-line	0.9995925659	1.0	1.000000000
ACM	APC SERVER	SGI Challenge L, 4 CPU, 256 MB RAM, 4 GB	6,714	1.5	6	5.00	7.50	1	2	standby off-line	0.9988841776	1.0	0.999999944
ACM	RAID DISK	480 GB	150,000	0.5	6	N/A	6.50	1	1	N/A	0.9999566685	N/A	0.999956669
ACM	OPS WORKSTATION	Sun Sparc 20/50, 64 MB RAM, 4 GB	15,947	0.5	6	5.00	6.50	1	2	standby off-line	0.9995925659	1.0	0.999999991
MSS/CSS	MSS/CSS SERVER	HP J210, 4 CPU, 256 MB, 4 GB	20000	2.5	6	5.00	8.50	1	2	standby off-line	0.9995751805	1.0	0.999999993
MSS	RAID	HP 36 GB RAID	150,000	0.5	6	N/A	6.50	1	1	N/A	0.9999566685	N/A	0.999956669
MSS	MSS WS	SUN Sparcstation 20/50, 128 MB, 4GB	15,947	0.5	6	5.00	6.50	1	2	standby off-line	0.9995925659	1.0	0.999999991
ISS	FDDI CONCENTRATOR	FDDI Concentrator - Bay Networks 2914-04	100,000	0.5	6	5.00	6.50	1	2	standby off-line	0.9999350042	1.0	1.000000000
ISS	FDDI CONCENTRATOR	FDDI Concentrator - Bay Networks 2914-04	100,000	0.5	6	5.00	6.50	2	3	standby off-line	0.9999350042	1.0	1.000000000
ISS	FDDI SWITCH	PowerHub7000 - ALANTEC (4 FDDI cards & 3 pwr supply)	146,000	0.5	6	N/A	6.50	1	1	N/A	0.9999554814	N/A	0.999955481
													0.9998687434

EOSD3990 Ao =	0.99987
EOSD3990 MDT =	0.43859

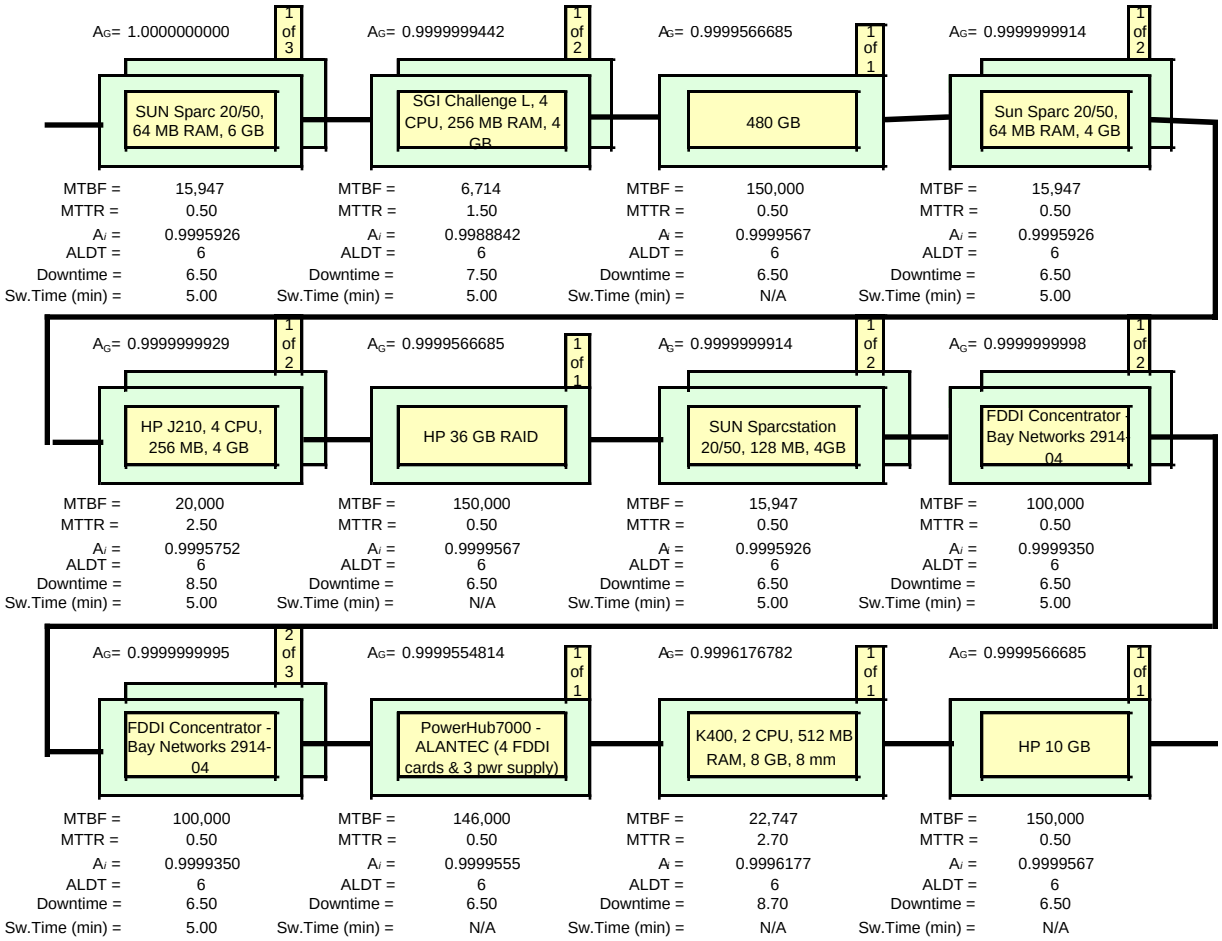
AG= 1.0000000000
1 of 3
SUN Sparc 20/50, 64 MB RAM, 6 GB
MTBF = 15,947
MTTR = 0.50
Ai = 0.9995926
ALDT = 6
Downtime = 6.50
Sw.Time (min) = 5.00
AG= 0.9999999442
1 of 2
SGI Challenge L, 4 CPU, 256 MB RAM, 4 GB
MTBF = 6,714
MTTR = 1.50
Ai = 0.9988842
ALDT = 6
Downtime = 7.50
Sw.Time (min) = 5.00
AG= 0.9999566685
1 of 1
480 GB
MTBF = 150,000
MTTR = 0.50
Ai = 0.9999567
ALDT = 6
Downtime = 6.50
Sw.Time (min) = N/A
AG= 0.9999999914
1 of 2
Sun Sparc 20/50, 64 MB RAM, 4 GB
MTBF = 15,947
MTTR = 0.50
Ai = 0.9995926
ALDT = 6
Downtime = 6.50
Sw.Time (min) = 5.00
AG= 0.9999999929
1 of 2
HP J210, 4 CPU, 256 MB, 4 GB
MTBF = 20,000
MTTR = 2.50
Ai = 0.9995752
ALDT = 6
Downtime = 8.50
Sw.Time (min) = 5.00
AG= 0.9999566685
1 of 1
HP 36 GB RAID
MTBF = 150,000
MTTR = 0.50
Ai = 0.9999567
ALDT = 6
Downtime = 6.50
Sw.Time (min) = N/A
AG= 0.9999999914
1 of 2
SUN Sparcstation 20/50, 128 MB, 4GB
MTBF = 15,947
MTTR = 0.50
Ai = 0.9995926
ALDT = 6
Downtime = 6.50
Sw.Time (min) = 5.00
AG= 0.9999999998
1 of 2
FDDI Concentrator - Bay Networks 2914-04
MTBF = 100,000
MTTR = 0.50
Ai = 0.9999350
ALDT = 6
Downtime = 6.50
Sw.Time (min) = 5.00
AG= 0.9999999995
2 of 3
FDDI Concentrator - Bay Networks 2914-04
MTBF = 100,000
MTTR = 0.50
Ai = 0.9999350
ALDT = 6
Downtime = 6.50
Sw.Time (min) = 5.00
AG= 0.9999554814
1 of 1
PowerHub7000 - ALANTEC (4 FDDI cards & 3 pwr supply)
MTBF = 146,000
MTTR = 0.50
Ai = 0.9999555
ALDT = 6
Downtime = 6.50
Sw.Time (min) = N/A
AG= 0.9996176782
1 of 1
K400, 2 CPU, 512 MB RAM, 8 GB, 8 mm
MTBF = 22,747
MTTR = 2.70
Ai = 0.9996177
ALDT = 6
Downtime = 8.70
Sw.Time (min) = N/A
AG= 0.9999566685
1 of 1
HP 10 GB
MTBF = 150,000
MTTR = 0.50
Ai = 0.9999567
ALDT = 6
Downtime = 6.50
Sw.Time (min) = N/A

EOSD 4000 Ao/MDT Analytical Results for LaRC

EOSD4000: Function Of IMS Data Management and Maintenance Interface (Ao>=.96, MDT<=4.0 hrs)

Subsystem Description	Equipment Description	Model/Part Number	MTBF (hour)	MTTR (hour)	Admin. Logistic Delay Time (hour)	Switch over Time (min)	Total Downtime (hour)	Number of Units Required (m)	Total Number Of Units (n)	Redundancy	Unit Availability (Ai)	P	Redundant Group Availability (m out of n)
Data Manag.	DMG SERVER	K400, 2 CPU, 512 MB RAM, 8 GB, 8 mm	22,747	2.7	6	N/A	8.70	1	1	N/A	0.9996176782	N/A	0.999617678
Data Manag.	RAID DISK	HP 10 GB	150,000	0.5	6	N/A	6.50	1	1	N/A	0.9999566685	N/A	0.999956669
Data Manag.	DATA SPECIALIST W/S	SUN Sparc 20/50, 64 MB RAM, 6 GB	15,947	0.5	6	5.00	6.50	1	3	standby off-line	0.9995925659	1.0	1.000000000
ACM	OPS WORKSTATION	Sun Sparc 20/50, 64 MB RAM, 4 GB	15,947	0.5	6	5.00	6.50	1	2	standby off-line	0.9995925659	1.0	0.999999991
DRP	DBMS SERVER	SGI Challenge XL, 2 CPU, 256 MB RAM, 6 GB	5,109	1.5	6	5.00	7.50	1	2	standby off-line	0.9985341542	1.0	0.999999904
DRP	RAID DISK	27 GB	150,000	0.5	6	N/A	6.50	1	1	N/A	0.9999566685	N/A	0.999956669
MSS/CSS	MSS/CSS SERVER	HP J210, 4 CPU, 256 MB, 4 GB	20000	2.5	6	5.00	8.50	1	2	standby off-line	0.9995751805	1.0	0.999999993
MSS	RAID	HP 36 GB RAID	150,000	0.5	6	N/A	6.50	1	1	N/A	0.9999566685	N/A	0.999956669
MSS	MSS WS	SUN Sparcstation 20/50, 128 MB, 4GB	15,947	0.5	6	5.00	6.50	1	2	standby off-line	0.9995925659	1.0	0.999999991
ISS	FDDI CONCENTRATOR	FDDI Concentrator - Bay Networks 2914-04	100,000	0.5	6	5.00	6.50	1	2	standby off-line	0.9999350042	1.0	1.000000000
ISS	FDDI CONCENTRATOR	FDDI Concentrator - Bay Networks 2914-04	100,000	0.5	6	5.00	6.50	2	3	standby off-line	0.9999350042	1.0	1.000000000
ISS	FDDI SWITCH	PowerHub7000 - ALANTEC (4 FDDI cards & 3 pwr supply)	146,000	0.5	6	N/A	6.50	1	1	N/A	0.9999554814	N/A	0.999955481
													0.9998687115

EOSD4000 Ao =	0.99987
EOSD4000 MDT =	0.45481

EOSD 4000 Ao/MDT Analytical Results for LaRC

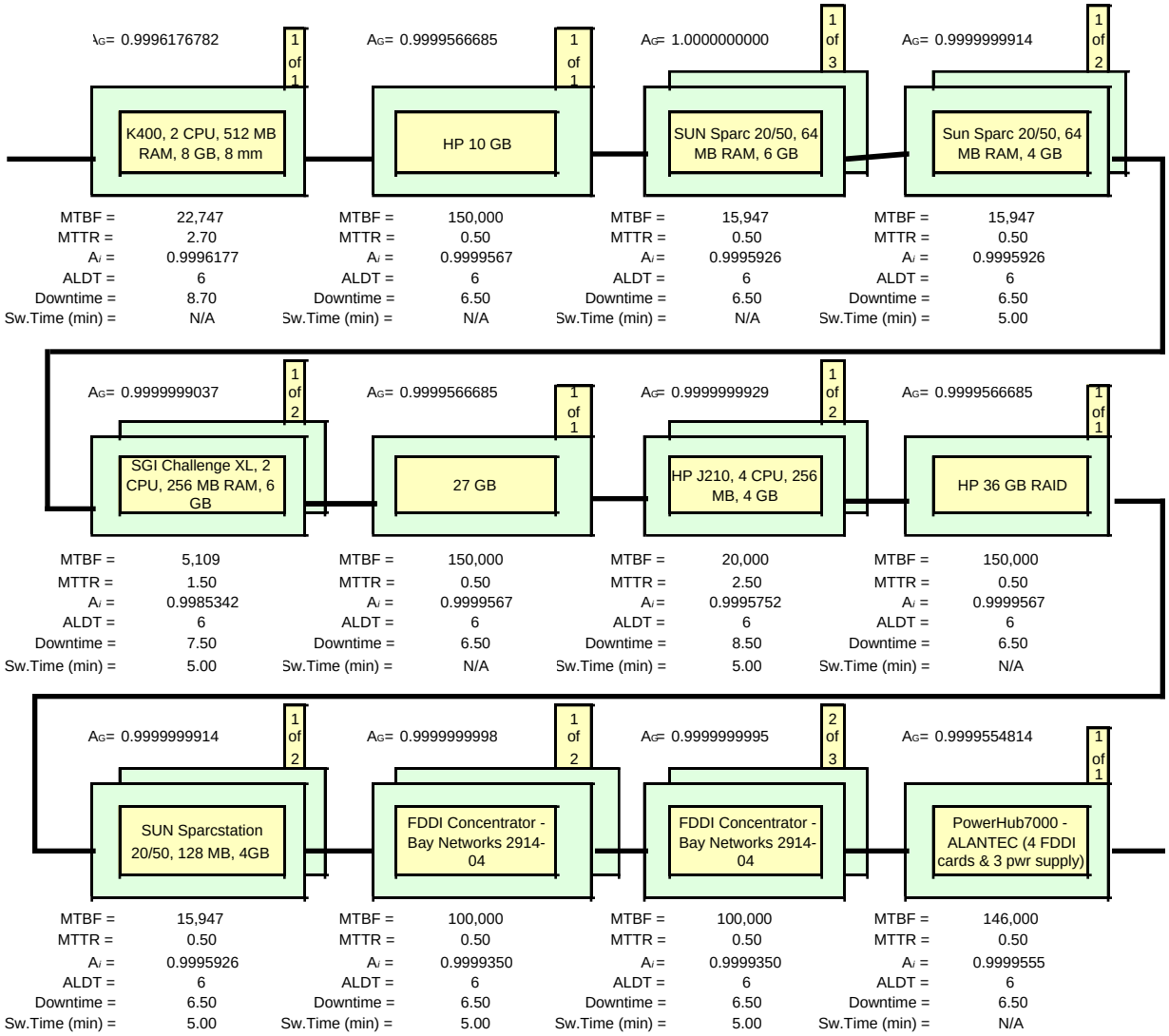

EOSD 3700 Ao/MDT Analytical Results for NSIDC

EOSD3700: Function of Planning and Data Processing (Ao>=.96, MDT<=4.0 hrs)

Subsystem Description	Equipment Description	Model/Part Number	MTBF (hour)	MTTR (hour)	Admin. Logistic Delay Time (hour)	Switchover Time (min)	Total Downtime (hour)	Number of Units Required (m)	Total Number Of Units (n)	Redundancy	Unit Availability (Ai)	P	Redundant Group Availability (m out of n)
Science Proc,	X TERMINAL	X TERMINAL, NCD HMX Pro, 16 MB RAM	27,548	0.5	6	5.00	6.50	3	4	standby off-line	0.9997641039	1.0	0.999999988
Science Proc,	SCIENCE PROCESSOR	SGI Pwr Chal.L, 4 CPU, 4 GB	6,714	1.5	6	60.00	7.50	1	1	N/A	0.9988841776	N/A	0.998884178
Science Proc,	TAPE STACKER	3, 8mm Drives w/stacker - Exabyte	160,000	0.3	6	N/A	6.25	1	1	N/A	0.9999609390	N/A	0.999960939
Science Proc,	RAID	SGI 17 GB	150,000	0.5	6	N/A	6.00	1	1	N/A	0.9999600016	N/A	0.999960002
Science Proc,	QUEUING SVR/RAID	SUN Sparc 20/712/ 12 GB RAID	3,660	1.0	6	5.00	7.00	1	2	standby off-line	0.9980910826	1.0	0.999999825
Planning	PLN DBMS SVR/RAID	SUN Ultra 8-Slot, 2CPU,256MB RAM	8,300	0.5	6	5.00	6.50	1	1	N/A	0.9992174803	N/A	0.999217480
Planning	Disk Storage	Sparcstorage Multipack 8.4 GB	200,000	0.5	6	5.00	6.50	1	2	standby off-line	0.9999675011	1.0	1.000000000
Planning	Prod.Plan/Mgmt WS	SUN Sparc 20/712/ 12 GB RAID	11,337	0.8	6	5.00	6.80	1	2	standby off-line	0.9994005536	1.0	0.999999982
													0.9980234194
		EOSD3700 Ao =	0.99802										
		EOSD3700 MDT =	1.52495										

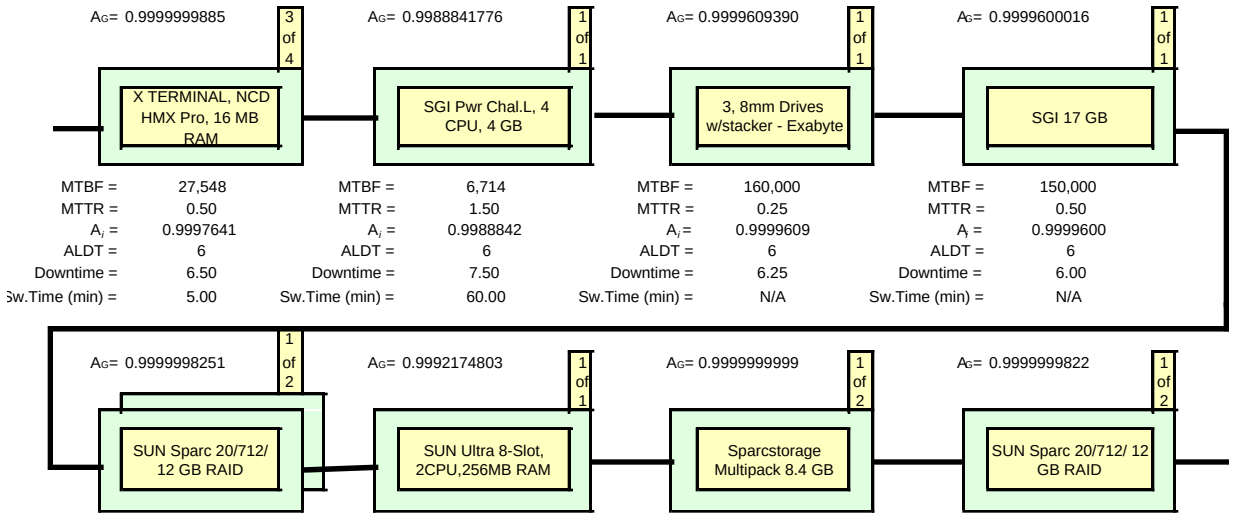

	X TERMINAL	SGI Pwr Chal.L	3, 8mm Drives	SGI 17 GB
MTBF =	27,548	6,714	160,000	150,000
MTTR =	0.50	1.50	0.25	0.50
A_i =	0.9997641	0.9988842	0.9999609	0.9999600
ALDT =	6	6	6	6
Downtime =	6.50	7.50	6.25	6.00
Sw.Time (min) =	5.00	60.00	N/A	N/A

	SUN Sparc 20/712/ 12 GB RAID	SUN Ultra 8-Slot, 2CPU,256MB RAM	Sparcstorage Multipack 8.4 GB	SUN Sparc 20/712/ 12 GB RAID
MTBF =	3,660	8,300	200,000	11,337
MTTR =	1.00	0.50	0.50	0.80
A_i =	0.9980911	0.9992175	0.9999675	0.9994006
ALDT =	6	6	6	6
Downtime =	7.00	6.50	6.50	6.80
Sw.Time (min) =	5.00	5.00	5.00	5.00

EOSD 3920 Ao/MDT Analytical Results for NSIDC

EOSD3920:Function of Archiving And Distributing Data (Ao>=.980, MDT<=2.0 hrs)

Subsystem Description	Equipment Description	Model/Part Number	MTBF (hour)	MTTR (hour)	Admin. Logistic Delay Time (hour)	Switchover Time (min)	Total Downtime (hour)	Number of Units Required (m)	Total Number Of Units (n)	Redundancy	Unit Availability (Ai)	P	Redundant Group Availability (m out of n)
ACM	APC SERVER	SGI Challenge L, 4 CPU, 256 MB RAM, 4 GB	6,714	1.5	6	5.00	7.50	1	2	standby off-line	0.9988841776	1.0	0.999999944
ACM	RAID DISK	108 GB	150,000	0.5	6	N/A	6.50	1	1	N/A	0.9999566685	N/A	0.999956669
ACM	OPS WORKSTATION	Sun Sparc 20/50, 64 MB RAM, 4 GB	15,947	0.5	6	5.00	6.50	1	2	standby off-line	0.9995925659	1.0	0.999999991
DIP	DISTRIBUTION SERVER	SUN Sparc 20/712, 256 MB RAM, 6 GB	3,752	1.0	6	5.00	7.00	1	2	standby off-line	0.9981378026	1.0	0.999999834
DIP	RAID DISK	210 GB	150,000	0.5	6	N/A	6.50	1	1	N/A	0.9999566685	N/A	0.999956669
DIP	TAPE STACKER	3, 8mm Drives w/stacker - Exabyte	160,000	0.3	6	N/A	6.25	1	1	N/A	0.9999609390	N/A	0.999960939
DIP	TAPE STACKER	3, 4mm Drives w/stacker - Exabyte	146,000	0.5	6	N/A	6.50	1	1	N/A	0.9999554814	N/A	0.999955481
DIP	CD ROM (1)	CD ROM, Recordable, JVC	58,392	0.5	6	N/A	6.50	1	1	N/A	0.9998886958	N/A	0.999888696
DIP	TAPE DRIVE (1)	3480/3490 TAPE DRIVE	140,000	0.5	6	N/A	6.50	1	1	N/A	0.9999535736	N/A	0.999953574
DIP	TAPE DRIVE (1)	6250 BPI Tape Drive	66,868	1.0	6	N/A	7.00	1	1	N/A	0.9998953271	N/A	0.999895327
WKS	WKS HOST	SGI Challenge L, 4 CPU, 256 MB RAM, 4 GB	6,714	1.5	6	5.00	7.50	1	2	standby off-line	0.9988841776	1.0	0.999999944
WKS	RAID DISK	SGI 360 GB	150,000	0.5	6	N/A	6.50	1	1	N/A	0.9999566685	N/A	0.999956669
DRP	FSMS SERVER	SGI Challenge XL, 4 CPU, 512 MB RAM, 6 GB	4,664	1.5	6	5.00	7.50	1	2	standby off-line	0.9983945200	1.0	0.999999885
DRP	RAID DISK	68 GB	150,000	0.5	6	N/A	6.50	1	1	N/A	0.9999566685	N/A	0.999956669
DRP	FSMS SERVER	SGI ChallengeL, 4 CPU, 256 MB RAM, 12 GB	6,714	1.5	6	5.00	7.50	1	2	standby off-line	0.9988841776	1.0	0.999999944
DRP	ARCHIVE ROBOTICS	STK Powderhorn ATL	8,515	1.0	6	N/A	7.00	1	1	N/A	0.9991785966	N/A	0.999178597
DRP	TAPE DRIVE (2)	3590 Tape Drive (10 each per archive robotics)	16,667	1.0	6	10.00	7.00	9	10	standby off-line	0.9995801847	1.0	0.999999574
DRP	DBMS SERVER	SGI ChallengeDM, 2CPU, 256 MB RAM, 4 GB	5,914	1.5	6	5.00	7.50	1	2	standby off-line	0.9987334290	1.0	0.999999928
DRP	RAID DISK	10 GB	150,000	0.5	6	N/A	6.50	1	1	N/A	0.9999566685	N/A	0.999956669
DDS	DOCUMENT SERVER	SUN Ultra 4-Slot, 2CPU,256MB RAM	8,300	0.5	6	5.00	6.50	1	2	standby off-line	0.9992174803	1.0	0.999999968
DDS	DOCUMENT SVR RAID	6GB	250,000	0.5	6	N/A	6.50	1	1	N/A	0.9999740007	N/A	0.999974001
MSS/CSS	MSS/CSS SERVER	HP J210, 4 CPU, 256 MB, 4 GB	20,000	2.5	6	5.00	8.50	1	2	standby off-line	0.9995751805	1.0	0.999999993
MSS	RAID	HP 36 GB RAID	150,000	0.5	6	N/A	6.50	1	1	N/A	0.9999566685	N/A	0.999956669
ISS	FDDI CONCENTRATOR	FDDI Concentrator - Bay Networks 2914-04	100,000	0.5	6	5.00	6.50	1	2	standby off-line	0.9999350042	1.0	1.000000000
ISS	FDDI CONCENTRATOR	FDDI Concentrator - Bay Networks 2914-04	100,000	0.5	6	5.00	6.50	2	3	standby off-line	0.9999350042	1.0	1.000000000
ISS	FDDI SWITCH	PowerHub7000 - ALANTEC (4 FDDI cards & 3 pwr supply)	146,000	0.5	6	N/A	6.50	1	1	N/A	0.9999554814	N/A	0.999955481

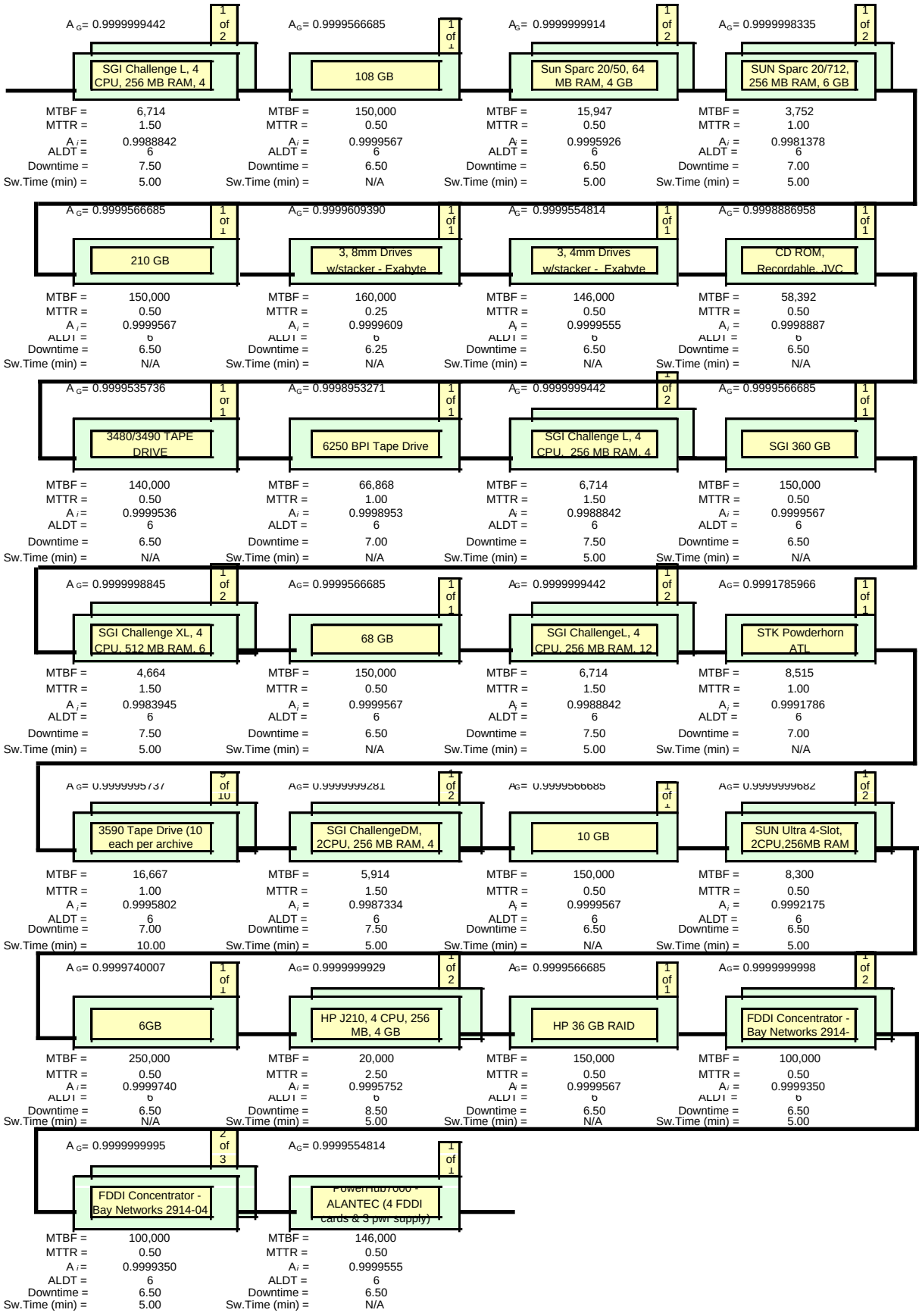
A G= 0.9999999442
1 of 2
SGI Challenge L, 4 CPU, 256 MB RAM, 4
MTBF = 6,714
MTTR = 1.50
A i = 0.9988842
ALDT = 6
Downtime = 7.50
Sw.Time (min) = 5.00
AG= 0.9999566685
1 of 1
108 GB
MTBF = 150,000
MTTR = 0.50
Ai = 0.9999567
ALDT = 6
Downtime = 6.50
Sw.Time (min) = N/A
AG= 0.9999999914
1 of 2
Sun Sparc 20/50, 64 MB RAM, 4 GB
MTBF = 15,947
MTTR = 0.50
Ai = 0.9995926
ALDT = 6
Downtime = 6.50
Sw.Time (min) = 5.00
AG= 0.9999998335
1 of 2
SUN Sparc 20/712, 256 MB RAM, 6 GB
MTBF = 3,752
MTTR = 1.00
Ai = 0.9981378
ALDT = 6
Downtime = 7.00
Sw.Time (min) = 5.00
A G= 0.9999566685
1 of 1
210 GB
MTBF = 150,000
MTTR = 0.50
A i = 0.9999567
ALDT = 6
Downtime = 6.50
Sw.Time (min) = N/A
AG= 0.9999609390
1 of 1
3, 8mm Drives w/stacker - Exabyte
MTBF = 160,000
MTTR = 0.25
Ai = 0.9999609
ALDT = 6
Downtime = 6.25
Sw.Time (min) = N/A
AG= 0.9999554814
1 of 1
3, 4mm Drives w/stacker - Exabyte
MTBF = 146,000
MTTR = 0.50
Ai = 0.9999555
ALDT = 6
Downtime = 6.50
Sw.Time (min) = N/A
AG= 0.9998886958
1 of 1
CD ROM, Recordable, JVC
MTBF = 58,392
MTTR = 0.50
Ai = 0.9998887
ALDT = 6
Downtime = 6.50
Sw.Time (min) = N/A
A G= 0.9999535736
1 of 1
3480/3490 TAPE DRIVE
MTBF = 140,000
MTTR = 0.50
A i = 0.9999536
ALDT = 6
Downtime = 6.50
Sw.Time (min) = N/A
AG= 0.9998953271
1 of 1
6250 BPI Tape Drive
MTBF = 66,868
MTTR = 1.00
Ai = 0.9998953
ALDT = 6
Downtime = 7.00
Sw.Time (min) = N/A
AG= 0.9999999442
1 of 2
SGI Challenge L, 4 CPU, 256 MB RAM, 4
MTBF = 6,714
MTTR = 1.50
Ai = 0.9988842
ALDT = 6
Downtime = 7.50
Sw.Time (min) = 5.00
AG= 0.9999566685
1 of 1
SGI 360 GB
MTBF = 150,000
MTTR = 0.50
Ai = 0.9999567
ALDT = 6
Downtime = 6.50
Sw.Time (min) = N/A
A G= 0.9999998845
1 of 2
SGI Challenge XL, 4 CPU, 512 MB RAM, 6
MTBF = 4,664
MTTR = 1.50
A i = 0.9983945
ALDT = 6
Downtime = 7.50
Sw.Time (min) = 5.00
AG= 0.9999566685
1 of 1
68 GB
MTBF = 150,000
MTTR = 0.50
Ai = 0.9999567
ALDT = 6
Downtime = 6.50
Sw.Time (min) = N/A
AG= 0.9999999442
1 of 2
SGI ChallengeL, 4 CPU, 256 MB RAM, 12
MTBF = 6,714
MTTR = 1.50
Ai = 0.9988842
ALDT = 6
Downtime = 7.50
Sw.Time (min) = 5.00
AG= 0.9991785966
1 of 1
STK Powderhorn ATL
MTBF = 8,515
MTTR = 1.00
Ai = 0.9991786
ALDT = 6
Downtime = 7.00
Sw.Time (min) = N/A
A G= 0.9999995737
9 of 10
3590 Tape Drive (10 each per archive
MTBF = 16,667
MTTR = 1.00
A i = 0.9995802
ALDT = 6
Downtime = 7.00
Sw.Time (min) = 10.00
AG= 0.9999999281
1 of 2
SGI ChallengeDM, 2CPU, 256 MB RAM, 4
MTBF = 5,914
MTTR = 1.50
Ai = 0.9987334
ALDT = 6
Downtime = 7.50
Sw.Time (min) = 5.00
AG= 0.9999566685
1 of 1
10 GB
MTBF = 150,000
MTTR = 0.50
Ai = 0.9999567
ALDT = 6
Downtime = 6.50
Sw.Time (min) = N/A
AG= 0.9999999682
1 of 2
SUN Ultra 4-Slot, 2CPU,256MB RAM
MTBF = 8,300
MTTR = 0.50
Ai = 0.9992175
ALDT = 6
Downtime = 6.50
Sw.Time (min) = 5.00
A G= 0.9999740007
1 of 1
6GB
MTBF = 250,000
MTTR = 0.50
A i = 0.9999740
ALDT = 6
Downtime = 6.50
Sw.Time (min) = N/A
AG= 0.9999999929
1 of 2
HP J210, 4 CPU, 256 MB, 4 GB
MTBF = 20,000
MTTR = 2.50
Ai = 0.9995752
ALDT = 6
Downtime = 8.50
Sw.Time (min) = 5.00
AG= 0.9999566685
1 of 1
HP 36 GB RAID
MTBF = 150,000
MTTR = 0.50
Ai = 0.9999567
ALDT = 6
Downtime = 6.50
Sw.Time (min) = N/A
AG= 0.9999999998
1 of 2
FDDI Concentrator - Bay Networks 2914-
MTBF = 100,000
MTTR = 0.50
Ai = 0.9999350
ALDT = 6
Downtime = 6.50
Sw.Time (min) = 5.00
A G= 0.9999999995
2 of 3
FDDI Concentrator - Bay Networks 2914-04
MTBF = 100,000
MTTR = 0.50
A i = 0.9999350
ALDT = 6
Downtime = 6.50
Sw.Time (min) = 5.00
AG= 0.9999554814
1 of 1
PowerHub7000 - ALANTEC (4 FDDI cards & 3 pwr supply)
MTBF = 146,000
MTTR = 0.50
Ai = 0.9999555
ALDT = 6
Downtime = 6.50
Sw.Time (min) = N/A

EOSD 3930 Ao/MDT Analytical Results for NSIDC

EOSD3930: User Interfaces to IMS Services at Individual DAAC Site (Ao>=.993, MDT<=2.0 hrs)

Subsystem Description	Equipment Description	Model/Part Number	MTBF (hour)	MTTR (hour)	Admin. Logistic Delay Time (hour)	Switchover Time (min)	Total Downtime (hour)	Number of Units Required (m)	Total Number Of Units (n)	Redundancy	Unit Availability (Ai)	P	Redundant Group Availability (m out of n)
Data Manag.	DMG SERVER	K400, 2 CPU, 512 MB RAM, 8 GB, 8 mm	22,747	2.7	6	N/A	8.70	1	1	N/A	0.9996176782	N/A	0.999617678
Data Manag.	RAID DISK	HP 10 GB	150,000	0.5	6	N/A	6.50	1	1	N/A	0.9999566685	N/A	0.999956669
ACM	APC SERVER	SGI Challenge L, 4 CPU, 256 MB RAM, 4 GB	6,714	1.5	6	5.00	7.50	1	2	standby off-line	0.9988841776	1.0	0.999999944
ACM	RAID DISK	480 GB	150,000	0.5	6	N/A	6.50	1	1	N/A	0.9999566685	N/A	0.999956669
ACM	OPS WORKSTATION	Sun Sparc 20/50, 64 MB RAM, 4 GB	15,947	0.5	6	5.00	6.50	1	2	standby off-line	0.9995925659	1.0	0.999999991
DRP	DBMS SERVER	SGI ChallengeDM, 2CPU, 256 MB RAM, 4 GB	5,914	1.5	6	5.00	7.50	1	2	standby off-line	0.9987334290	1.0	0.999999928
DRP	RAID DISK	10 GB	150,000	0.5	6	N/A	6.50	1	1	N/A	0.9999566685	N/A	0.999956669
MSS/CSS	MSS/CSS SERVER	HP J210, 4 CPU, 256 MB, 4 GB	20000	2.5	6	5.00	8.50	1	2	standby off-line	0.9995751805	1.0	0.999999993
MSS	RAID	HP 36 GB RAID	150,000	0.5	6	N/A	6.50	1	1	N/A	0.9999566685	N/A	0.999956669
MSS	MSS WS	SUN Sparcstation 20/50, 128 MB, 4GB	15,947	0.5	6	5.00	6.50	1	2	standby off-line	0.9995925659	1.0	0.999999991
ISS	FDDI CONCENTRATOR	FDDI Concentrator - Bay Networks 2914-04	100,000	0.5	6	5.00	6.50	1	2	standby off-line	0.9999350042	1.0	1.000000000
ISS	FDDI CONCENTRATOR	FDDI Concentrator - Bay Networks 2914-04	100,000	0.5	6	5.00	6.50	2	3	standby off-line	0.9999350042	1.0	1.000000000
ISS	FDDI SWITCH	PowerHub7000 - ALANTEC (4 FDDI cards & 3 pwr supply)	146,000	0.5	6	N/A	6.50	1	1	N/A	0.9999554814	N/A	0.999955481
													0.9998253457
		EOSD3930 Ao =	0.99983										
		EOSD3930 MDT =	0.4022										

EOSD 3930 Ao/MDT Analytical Results for NSIDC (continued)

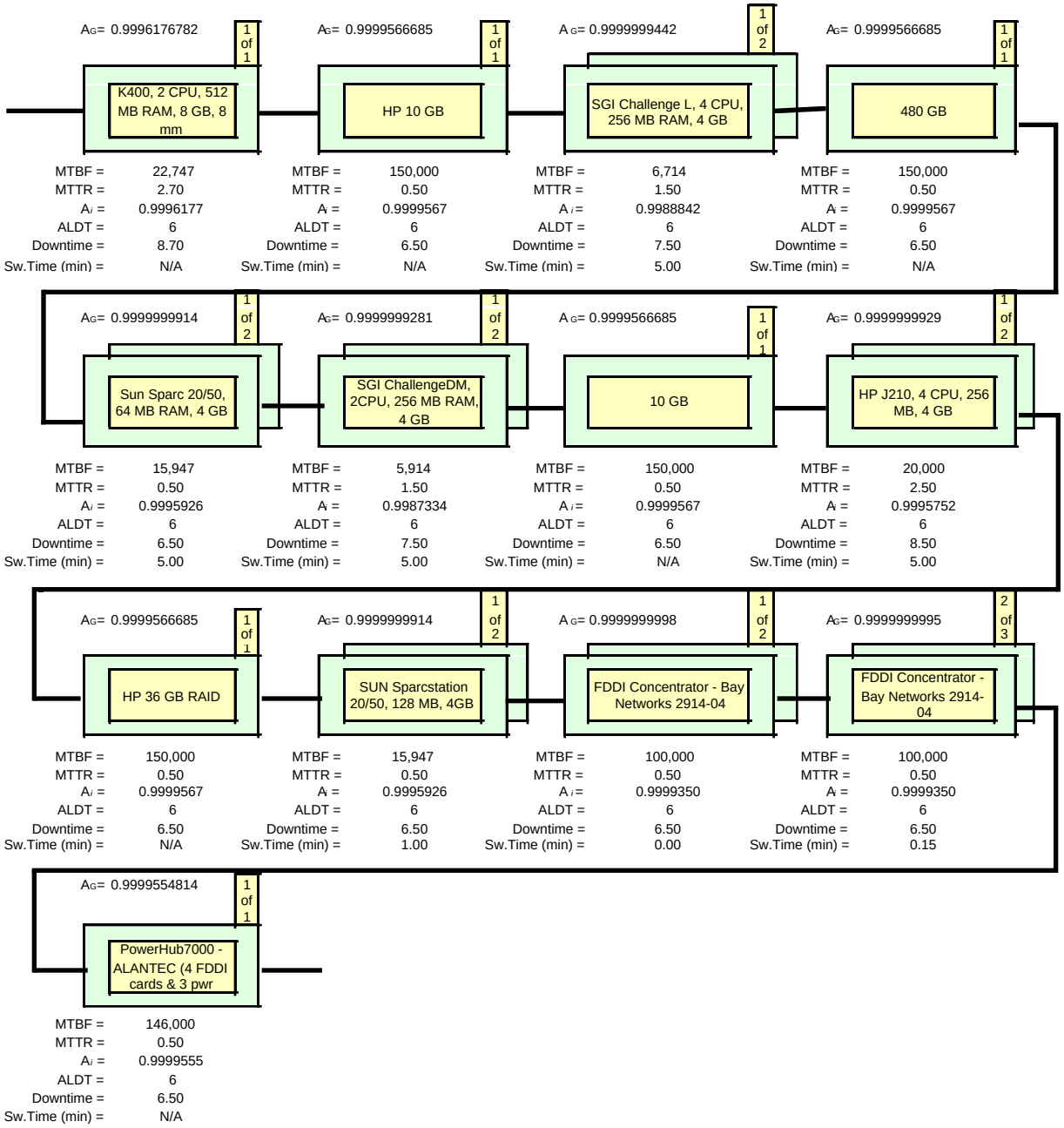

EOSD 3940 Ao/MDT Analytical Results for NSIDC

EOSD3940: Function Of Information Searches On The ECS Directory(Ao>=.993, MDT<=2.0 hrs)

Subsystem Description	Equipment Description	Model/Part Number	MTBF (hour)	MTTR (hour)	Admin. Logistic Delay Time (hour)	Switchover Time (min)	Total Downtime (hour)	Number of Units Required (m)	Total Number Of Units (n)	Redundancy	Unit Availability (Ai)	P	Redundant Group Availability (m out of n)
Data Manag.	DMG SERVER	K400, 2 CPU, 512 MB RAM, 8 GB, 8 mm	22,747	2.7	6	N/A	8.70	1	1	N/A	0.9996176782	N/A	0.999617678
Data Manag.	RAID DISK	HP 10 GB	150,000	0.5	6	N/A	6.50	1	1	N/A	0.9999566685	N/A	0.999956669
ACM	APC SERVER	SGI Challenge L, 4 CPU, 256 MB RAM, 4 GB	6,714	1.5	6	5.00	7.50	1	2	standby off-line	0.9988841776	1.0	0.999999944
ACM	RAID DISK	480 GB	150,000	0.5	6	N/A	6.50	1	1	N/A	0.9999566685	N/A	0.999956669
ACM	OPS WORKSTATION	Sun Sparc 20/50, 64 MB RAM, 4 GB	15,947	0.5	6	5.00	6.50	1	2	standby off-line	0.9995925659	1.0	0.999999991
MSS/CSS	MSS/CSS SERVER	HP J210, 4 CPU, 256 MB, 4 GB	20000	2.5	6	5.00	8.50	1	2	standby off-line	0.9995751805	1.0	0.999999993
MSS	RAID	HP 36 GB RAID	150,000	0.5	6	N/A	6.50	1	1	N/A	0.9999566685	N/A	0.999956669
MSS	MSS WS	SUN Sparcstation 20/50, 128 MB, 4GB	15,947	0.5	6	5.00	6.50	1	2	standby off-line	0.9995925659	1.0	0.999999991
ISS	FDDI CONCENTRATOR	FDDI Concentrator - Bay Networks 2914-04	100,000	0.5	6	5.00	6.50	1	2	standby off-line	0.9999350042	1.0	1.000000000
ISS	FDDI CONCENTRATOR	FDDI Concentrator - Bay Networks 2914-04	100,000	0.5	6	5.00	6.50	2	3	standby off-line	0.9999350042	1.0	1.000000000
ISS	FDDI SWITCH	PowerHub7000 - ALANTEC (4 FDDI cards & 3 pwr supply)	146,000	0.5	6	N/A	6.50	1	1	N/A	0.9999554814	N/A	0.999955481
													0.9998687434

EOSD3940 Ao =	0.99987
EOSD3940 MDT =	0.43859

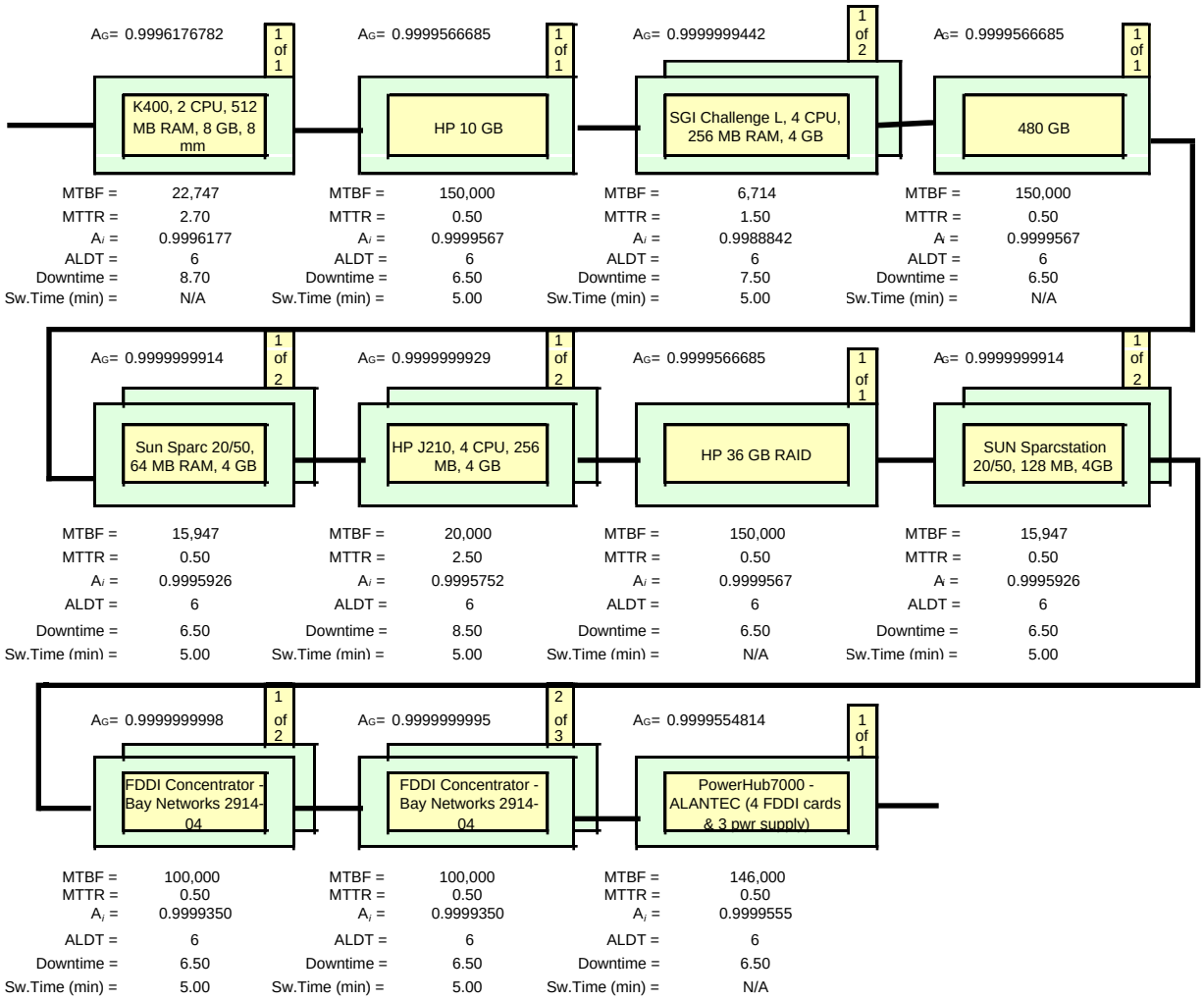
AG= 0.9996176782
1 of 1
K400, 2 CPU, 512 MB RAM, 8 GB, 8 mm
MTBF = 22,747
MTTR = 2.70
Ai = 0.9996177
ALDT = 6
Downtime = 8.70
Sw.Time (min) = N/A
AG= 0.9999566685
1 of 1
HP 10 GB
MTBF = 150,000
MTTR = 0.50
Ai = 0.9999567
ALDT = 6
Downtime = 6.50
Sw.Time (min) = 5.00
AG= 0.9999999442
1 of 2
SGI Challenge L, 4 CPU, 256 MB RAM, 4 GB
MTBF = 6,714
MTTR = 1.50
Ai = 0.9988842
ALDT = 6
Downtime = 7.50
Sw.Time (min) = 5.00
AG= 0.9999566685
1 of 1
480 GB
MTBF = 150,000
MTTR = 0.50
Ai = 0.9999567
ALDT = 6
Downtime = 6.50
Sw.Time (min) = N/A
AG= 0.9999999914
1 of 2
Sun Sparc 20/50, 64 MB RAM, 4 GB
MTBF = 15,947
MTTR = 0.50
Ai = 0.9995926
ALDT = 6
Downtime = 6.50
Sw.Time (min) = 5.00
AG= 0.9999999929
1 of 2
HP J210, 4 CPU, 256 MB, 4 GB
MTBF = 20,000
MTTR = 2.50
Ai = 0.9995752
ALDT = 6
Downtime = 8.50
Sw.Time (min) = 5.00
AG= 0.9999566685
1 of 1
HP 36 GB RAID
MTBF = 150,000
MTTR = 0.50
Ai = 0.9999567
ALDT = 6
Downtime = 6.50
Sw.Time (min) = N/A
AG= 0.9999999914
1 of 2
SUN Sparcstation 20/50, 128 MB, 4GB
MTBF = 15,947
MTTR = 0.50
Ai = 0.9995926
ALDT = 6
Downtime = 6.50
Sw.Time (min) = 5.00
AG= 0.9999999998
1 of 2
FDDI Concentrator - Bay Networks 2914-04
MTBF = 100,000
MTTR = 0.50
Ai = 0.9999350
ALDT = 6
Downtime = 6.50
Sw.Time (min) = 5.00
AG= 0.9999999995
2 of 3
FDDI Concentrator - Bay Networks 2914-04
MTBF = 100,000
MTTR = 0.50
Ai = 0.9999350
ALDT = 6
Downtime = 6.50
Sw.Time (min) = 5.00
AG= 0.9999554814
1 of 1
PowerHub7000 - ALANTEC (4 FDDI cards & 3 pwr supply)
MTBF = 146,000
MTTR = 0.50
Ai = 0.9999555
ALDT = 6
Downtime = 6.50
Sw.Time (min) = N/A

EOSD 3960 Ao/MDT Analytical Results for NSIDC

EOSD3960:Function Of MetaData Ingest and Update (Ao>=.96, MDT<=4.0 hrs)

Subsystem Description	Equipment Description	Model/Part Number	MTBF (hour)	MTTR (hour)	Admin. Logistic Delay Time (hour)	Switchover Time (min)	Total Downtime (hour)	Number of Units Required (m)	Total Number Of Units (n)	Redundancy	Unit Availability (Ai)	P	Redundant Group Availability (m out of n)
Data Manag.	DATA SPECIALIST W/S	SUN Sparc 20/50, 64 MB RAM, 6 GB	15,947	0.5	6	5.00	6.50	1	2	standby off-line	0.9995925659	1.0	0.999999991
ACM	APC SERVER	SGI Challenge L, 4 CPU, 256 MB RAM, 4 GB	6,714	1.5	6	5.00	7.50	1	2	standby off-line	0.9988841776	1.0	0.999999944
ACM	RAID DISK	480 GB	150,000	0.5	6	N/A	6.50	1	1	N/A	0.9999566685	N/A	0.999956669
ACM	OPS WORKSTATION	Sun Sparc 20/50, 64 MB RAM, 4 GB	15,947	0.5	6	5.00	6.50	1	2	standby off-line	0.9995925659	1.0	0.999999991
DIP	DISTRIBUTION SERVER	SUN Sparc 20/712, 256 MB RAM, 6 GB	3,752	1.0	6	5.00	7.00	1	2	standby off-line	0.9981378026	1.0	0.999999834
DIP	RAID DISK	210 GB	150,000	0.5	6	N/A	6.50	1	1	N/A	0.9999566685	N/A	0.999956669
DRP	DBMS SERVER	SGI ChallengeDM, 2CPU, 256 MB RAM, 4 GB	5,914	1.5	6	5.00	7.50	1	2	standby off-line	0.9987334290	1.0	0.999999928
DRP	RAID DISK	10 GB	150,000	0.5	6	N/A	6.50	1	1	N/A	0.9999566685	N/A	0.999956669
MSS/CSS	MSS/CSS SERVER	HP J210, 4 CPU, 256 MB, 4 GB	20000	2.5	6	5.00	8.50	1	2	standby off-line	0.9995751805	1.0	0.999999993
MSS	RAID	HP 36 GB RAID	150,000	0.5	6	N/A	6.50	1	1	N/A	0.9999566685	N/A	0.999956669
MSS	MSS WS	SUN Sparcstation 20/50, 128 MB, 4GB	15,947	0.5	6	5.00	6.50	1	2	standby off-line	0.9995925659	1.0	0.999999991
ISS	FDDI CONCENTRATOR	FDDI Concentrator - Bay Networks 2914-04	100,000	0.5	6	5.00	6.50	1	2	standby off-line	0.9999350042	1.0	1.000000000
ISS	FDDI CONCENTRATOR	FDDI Concentrator - Bay Networks 2914-04	100,000	0.5	6	5.00	6.50	1	2	standby off-line	0.9999350042	1.0	1.000000000
ISS	FDDI CONCENTRATOR	FDDI Concentrator - Bay Networks 2914-04	100,000	0.5	6	5.00	6.50	2	3	standby off-line	0.9999350042	1.0	1.000000000
ISS	FDDI SWITCH	PowerHub7000 - ALANTEC (4 FDDI cards & 3 pwr supply)	146,000	0.5	6	N/A	6.50	1	1	N/A	0.9999554814	N/A	0.999955481
													0.9997818552

EOSD3960 Ao = 0.99978
EOSD3960 MDT = 0.34449

Note: (1) Robot Failure Rate is 25% Duty cycle
(2) Tape Drive Failure Rate is 25% Duty cycle

EOSD 3960 Ao/MDT Analytical Results for NSIDC (continued)

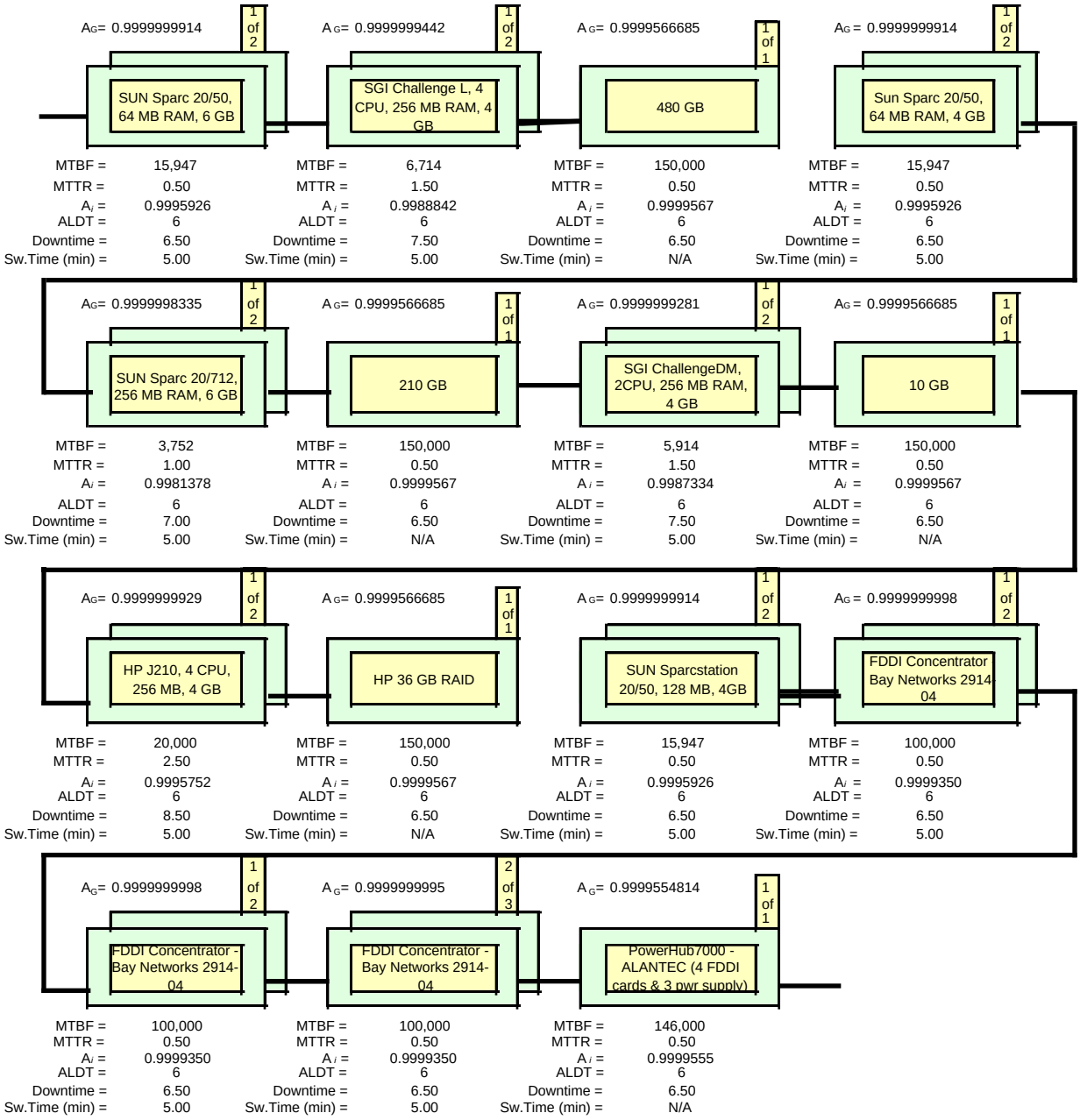

EOSD 3970 Ao/MDT Analytical Results for NSIDC

EOSD3970: Function Of Info. Searches On Local Holdings (Ao>=.96, MDT<=4.0 hrs)

Subsystem Description	Equipment Description	Model/Part Number	MTBF (hour)	MTTR (hour)	Admin. Logistic Delay Time (hour)	Switch over Time (min)	Total Downtime (hour)	Number of Units Required (m)	Total Number Of Units (n)	Redundancy	Unit Availability (Ai)	P	Redundant Group Availability (m out of n)
ACM	APC SERVER	SGI Challenge L, 4 CPU, 256 MB RAM, 4 GB	6,714	1.5	6	5.00	7.50	1	2	standby off-line	0.9988841776	1.0	0.999999944
ACM	RAID DISK	480 GB	150,000	0.5	6	N/A	6.50	1	1	N/A	0.9999566685	N/A	0.999956669
ACM	OPS WORKSTATION	Sun Sparc 20/50, 64 MB RAM, 4 GB	15,947	0.5	6	5.00	6.50	1	2	standby off-line	0.9995925659	1.0	0.999999991
DRP	DBMS SERVER	SGI ChallengeDM, 2CPU, 256 MB RAM, 4 GB	5,914	1.5	6	5.00	7.50	1	2	standby off-line	0.9987334290	1.0	0.999999928
DRP	RAID DISK	10 GB	150,000	0.5	6	N/A	6.50	1	1	N/A	0.9999566685	N/A	0.999956669
MSS/CSS	MSS/CSS SERVER	HP J210, 4 CPU, 256 MB, 4 GB	20000	2.5	6	5.00	8.50	1	2	standby off-line	0.9995751805	1.0	0.999999993
MSS	RAID	HP 36 GB RAID	150,000	0.5	6	N/A	6.50	1	1	N/A	0.9999566685	N/A	0.999956669
MSS	MSS WS	SUN Sparcstation 20/50, 128 MB, 4GB	15,947	0.5	6	5.00	6.50	1	2	standby off-line	0.9995925659	1.0	0.999999991
ISS	FDDI CONCENTRATOR	FDDI Concentrator - Bay Networks 2914-04	100,000	0.5	6	5.00	6.50	1	2	standby off-line	0.9999350042	1.0	1.000000000
ISS	FDDI CONCENTRATOR	FDDI Concentrator - Bay Networks 2914-04	100,000	0.5	6	5.00	6.50	2	3	standby off-line	0.9999350042	1.0	1.000000000
ISS	FDDI SWITCH	PowerHub7000 - ALANTEC (4 FDDI cards & 3 pwr supply)	146,000	0.5	6	N/A	6.50	1	1	N/A	0.9999554814	N/A	0.999955481
													0.9998253457

EOSD3970 Ao =	0.99983
EOSD3970 MDT =	0.4022

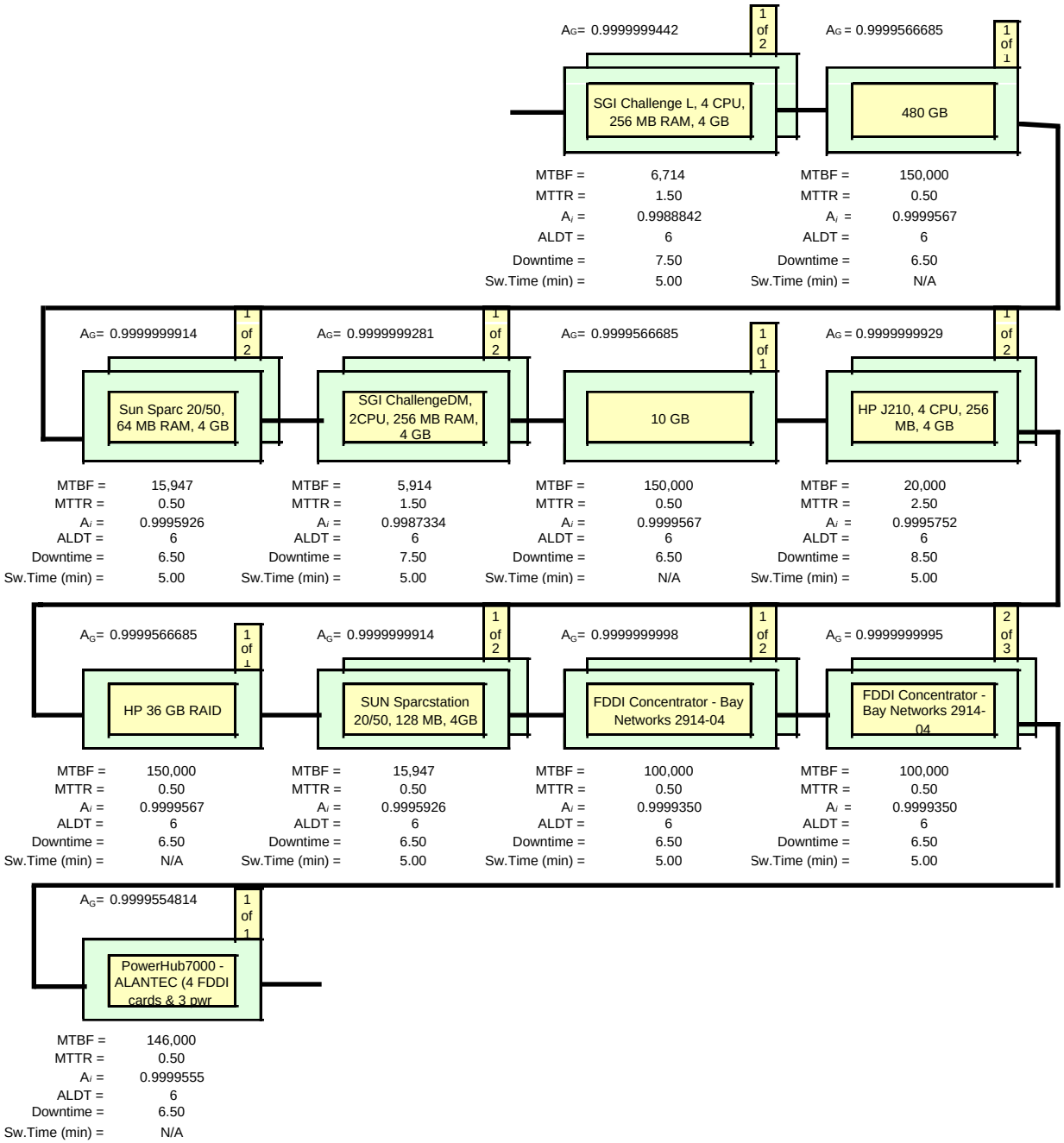
AG= 0.9999999442
1 of 2
SGI Challenge L, 4 CPU, 256 MB RAM, 4 GB
MTBF = 6,714
MTTR = 1.50
Ai = 0.9988842
ALDT = 6
Downtime = 7.50
Sw.Time (min) = 5.00
AG = 0.9999566685
1 of 1
480 GB
MTBF = 150,000
MTTR = 0.50
Ai = 0.9999567
ALDT = 6
Downtime = 6.50
Sw.Time (min) = N/A
AG= 0.9999999914
1 of 2
Sun Sparc 20/50, 64 MB RAM, 4 GB
MTBF = 15,947
MTTR = 0.50
Ai = 0.9995926
ALDT = 6
Downtime = 6.50
Sw.Time (min) = 5.00
AG= 0.9999999281
1 of 2
SGI ChallengeDM, 2CPU, 256 MB RAM, 4 GB
MTBF = 5,914
MTTR = 1.50
Ai = 0.9987334
ALDT = 6
Downtime = 7.50
Sw.Time (min) = 5.00
AG= 0.9999566685
1 of 1
10 GB
MTBF = 150,000
MTTR = 0.50
Ai = 0.9999567
ALDT = 6
Downtime = 6.50
Sw.Time (min) = N/A
AG = 0.9999999929
1 of 2
HP J210, 4 CPU, 256 MB, 4 GB
MTBF = 20,000
MTTR = 2.50
Ai = 0.9995752
ALDT = 6
Downtime = 8.50
Sw.Time (min) = 5.00
AG= 0.9999566685
1 of 1
HP 36 GB RAID
MTBF = 150,000
MTTR = 0.50
Ai = 0.9999567
ALDT = 6
Downtime = 6.50
Sw.Time (min) = N/A
AG= 0.9999999914
1 of 2
SUN Sparcstation 20/50, 128 MB, 4GB
MTBF = 15,947
MTTR = 0.50
Ai = 0.9995926
ALDT = 6
Downtime = 6.50
Sw.Time (min) = 5.00
AG= 0.9999999998
1 of 2
FDDI Concentrator - Bay Networks 2914-04
MTBF = 100,000
MTTR = 0.50
Ai = 0.9999350
ALDT = 6
Downtime = 6.50
Sw.Time (min) = 5.00
AG = 0.9999999995
2 of 3
FDDI Concentrator - Bay Networks 2914-04
MTBF = 100,000
MTTR = 0.50
Ai = 0.9999350
ALDT = 6
Downtime = 6.50
Sw.Time (min) = 5.00
AG= 0.9999554814
1 of 1
PowerHub7000 - ALANTEC (4 FDDI cards & 3 pwr
MTBF = 146,000
MTTR = 0.50
Ai = 0.9999555
ALDT = 6
Downtime = 6.50
Sw.Time (min) = N/A

EOSD 3980 Ao/MDT Analytical Results for NSIDC

EOSD3980: Function Of Local Data Order Submission (Ao>=.96, MDT<=4.0 hrs)

Subsystem Description	Equipment Description	Model/Part Number	MTBF (hour)	MTTR (hour)	Admin. Logistic Delay Time (hour)	Switch over Time (min)	Total Downtime (hour)	Number of Units Required (m)	Total Number Of Units (n)	Redundancy	Unit Availability (Ai)	P	Redundant Group Availability (m out of n)
Data Manag.	DATA SPECIALIST W/S	SUN Sparc 20/50, 64 MB RAM, 6 GB	15,947	0.5	6	5.00	6.50	1	2	standby off-line	0.9995925659	1.0	0.999999991
ACM	APC SERVER	SGI Challenge L, 4 CPU, 256 MB RAM, 4 GB	6,714	1.5	6	5.00	7.50	1	2	standby off-line	0.9988841776	1.0	0.999999944
ACM	RAID DISK	480 GB	150,000	0.5	6	N/A	6.50	1	1	N/A	0.9999566685	N/A	0.999956669
ACM	OPS WORKSTATION	Sun Sparc 20/50, 64 MB RAM, 4 GB	15,947	0.5	6	5.00	6.50	1	2	standby off-line	0.9995925659	1.0	0.999999991
MSS/CSS	MSS/CSS SERVER	HP J210, 4 CPU, 256 MB, 4 GB	20000	2.5	6	5.00	8.50	1	2	standby off-line	0.9995751805	1.0	0.999999993
MSS	RAID	HP 36 GB RAID	150,000	0.5	6	N/A	6.50	1	1	N/A	0.9999566685	N/A	0.999956669
MSS	MSS WS	SUN Sparcstation 20/50, 128 MB, 4GB	15,947	0.5	6	5.00	6.50	1	2	standby off-line	0.9995925659	1.0	0.999999991
ISS	FDDI CONCENTRATOR	FDDI Concentrator - Bay Networks 2914-04	100,000	0.5	6	5.00	6.50	1	2	standby off-line	0.9999350042	1.0	1.000000000
ISS	FDDI CONCENTRATOR	FDDI Concentrator - Bay Networks 2914-04	100,000	0.5	6	5.00	6.50	2	3	standby off-line	0.9999350042	1.0	1.000000000
ISS	FDDI SWITCH	PowerHub7000 - ALANTEC (4 FDDI cards & 3 pwr supply)	146,000	0.5	6	N/A	6.50	1	1	N/A	0.9999554814	N/A	0.999955481
													0.9998687434
		EOSD3980 Ao =	0.99987										
		EOSD3980 MDT =	0.43859										

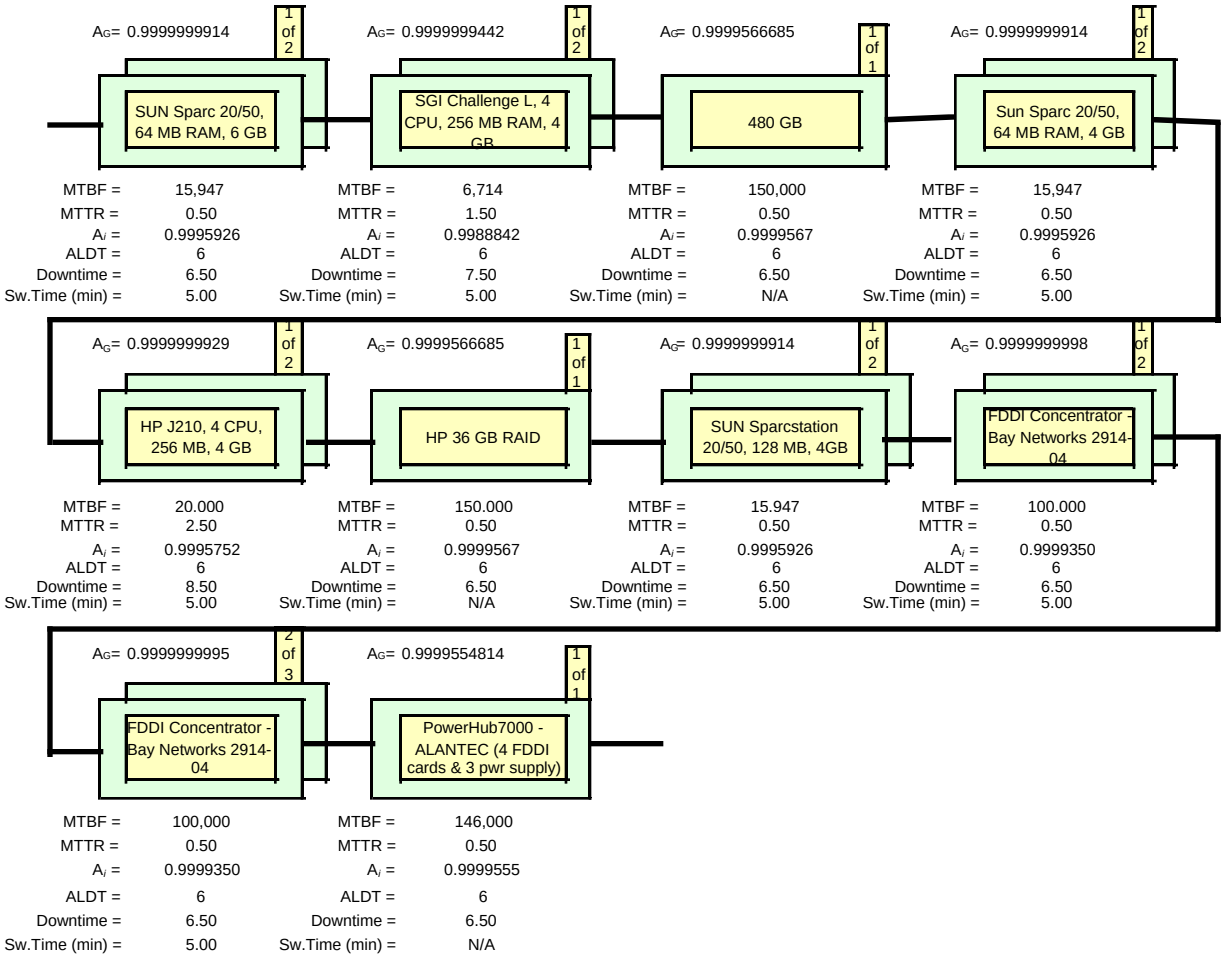
AG= 0.9999999914
1 of 2
SUN Sparc 20/50, 64 MB RAM, 6 GB
MTBF = 15,947
MTTR = 0.50
Ai = 0.9995926
ALDT = 6
Downtime = 6.50
Sw.Time (min) = 5.00
AG= 0.9999999442
1 of 2
SGI Challenge L, 4 CPU, 256 MB RAM, 4 GB
MTBF = 6,714
MTTR = 1.50
Ai = 0.9988842
ALDT = 6
Downtime = 7.50
Sw.Time (min) = 5.00
AG= 0.9999566685
1 of 1
480 GB
MTBF = 150,000
MTTR = 0.50
Ai = 0.9999567
ALDT = 6
Downtime = 6.50
Sw.Time (min) = N/A
AG= 0.9999999914
1 of 2
Sun Sparc 20/50, 64 MB RAM, 4 GB
MTBF = 15,947
MTTR = 0.50
Ai = 0.9995926
ALDT = 6
Downtime = 6.50
Sw.Time (min) = 5.00
AG= 0.9999999929
1 of 2
HP J210, 4 CPU, 256 MB, 4 GB
MTBF = 20.000
MTTR = 2.50
Ai = 0.9995752
ALDT = 6
Downtime = 8.50
Sw.Time (min) = 5.00
AG= 0.9999566685
1 of 1
HP 36 GB RAID
MTBF = 150.000
MTTR = 0.50
Ai = 0.9999567
ALDT = 6
Downtime = 6.50
Sw.Time (min) = N/A
AG= 0.9999999914
1 of 2
SUN Sparcstation 20/50, 128 MB, 4GB
MTBF = 15.947
MTTR = 0.50
Ai = 0.9995926
ALDT = 6
Downtime = 6.50
Sw.Time (min) = 5.00
AG= 0.9999999998
1 of 2
FDDI Concentrator - Bay Networks 2914-04
MTBF = 100.000
MTTR = 0.50
Ai = 0.9999350
ALDT = 6
Downtime = 6.50
Sw.Time (min) = 5.00
AG= 0.9999999995
2 of 3
FDDI Concentrator - Bay Networks 2914-04
MTBF = 100,000
MTTR = 0.50
Ai = 0.9999350
ALDT = 6
Downtime = 6.50
Sw.Time (min) = 5.00
AG= 0.9999554814
1 of 1
PowerHub7000 - ALANTEC (4 FDDI cards & 3 pwr supply)
MTBF = 146,000
MTTR = 0.50
Ai = 0.9999555
ALDT = 6
Downtime = 6.50
Sw.Time (min) = N/A

EOSD 3990 Ao/MDT Analytical Results for NSIDC

EOSD3990: Function Of Data Order Submission Across DAACs (Ao<=.96, MDT>=4.0 hrs)

Subsystem Description	Equipment Description	Model/Part Number	MTBF (hour)	MTTR (hour)	Admin. Logistic Delay Time (hour)	Switchover Time (min)	Total Downtime (hour)	Number of Units Required (m)	Total Number Of Units (n)	Redundancy	Unit Availability (Ai)	P	Redundant Group Availability (m out of n)
Data Manag.	DMG SERVER	K400, 2 CPU, 512 MB RAM, 8 GB, 8 mm	22,747	2.7	6	N/A	8.70	1	1	N/A	0.9996176782	N/A	0.999617678
Data Manag.	RAID DISK	HP 10 GB	150,000	0.5	6	N/A	6.50	1	1	N/A	0.9999566685	N/A	0.999956669
Data Manag.	DATA SPECIALIST W/S	SUN Sparc 20/50, 64 MB RAM, 6 GB	15,947	0.5	6	5.00	6.50	1	2	standby off-line	0.9995925659	1.0	0.999999991
ACM	APC SERVER	SGI Challenge L, 4 CPU, 256 MB RAM, 4 GB	6,714	1.5	6	5.00	7.50	1	2	standby off-line	0.9988841776	1.0	0.999999944
ACM	RAID DISK	480 GB	150,000	0.5	6	N/A	6.50	1	1	N/A	0.9999566685	N/A	0.999956669
ACM	OPS WORKSTATION	Sun Sparc 20/50, 64 MB RAM, 4 GB	15,947	0.5	6	5.00	6.50	1	2	standby off-line	0.9995925659	1.0	0.999999991
MSS/CSS	MSS/CSS SERVER	HP J210, 4 CPU, 256 MB, 4 GB	20000	2.5	6	5.00	8.50	1	2	standby off-line	0.9995751805	1.0	0.999999993
MSS	RAID	HP 36 GB RAID	150,000	0.5	6	N/A	6.50	1	1	N/A	0.9999566685	N/A	0.999956669
MSS	MSS WS	SUN Sparcstation 20/50, 128 MB, 4GB	15,947	0.5	6	5.00	6.50	1	2	standby off-line	0.9995925659	1.0	0.999999991
ISS	FDDI CONCENTRATOR	FDDI Concentrator - Bay Networks 2914-04	100,000	0.5	6	5.00	6.50	1	2	standby off-line	0.9999350042	1.0	1.000000000
ISS	FDDI CONCENTRATOR	FDDI Concentrator - Bay Networks 2914-04	100,000	0.5	6	5.00	6.50	2	3	standby off-line	0.9999350042	1.0	1.000000000
ISS	FDDI SWITCH	PowerHub7000 - ALANTEC (4 FDDI cards & 3 pwr supply)	146,000	0.5	6	N/A	6.50	1	1	N/A	0.9999554814	N/A	0.999955481
													0.9998687434
		EOSD3990 Ao =	0.99987										
		EOSD3990 MDT =	0.43859										

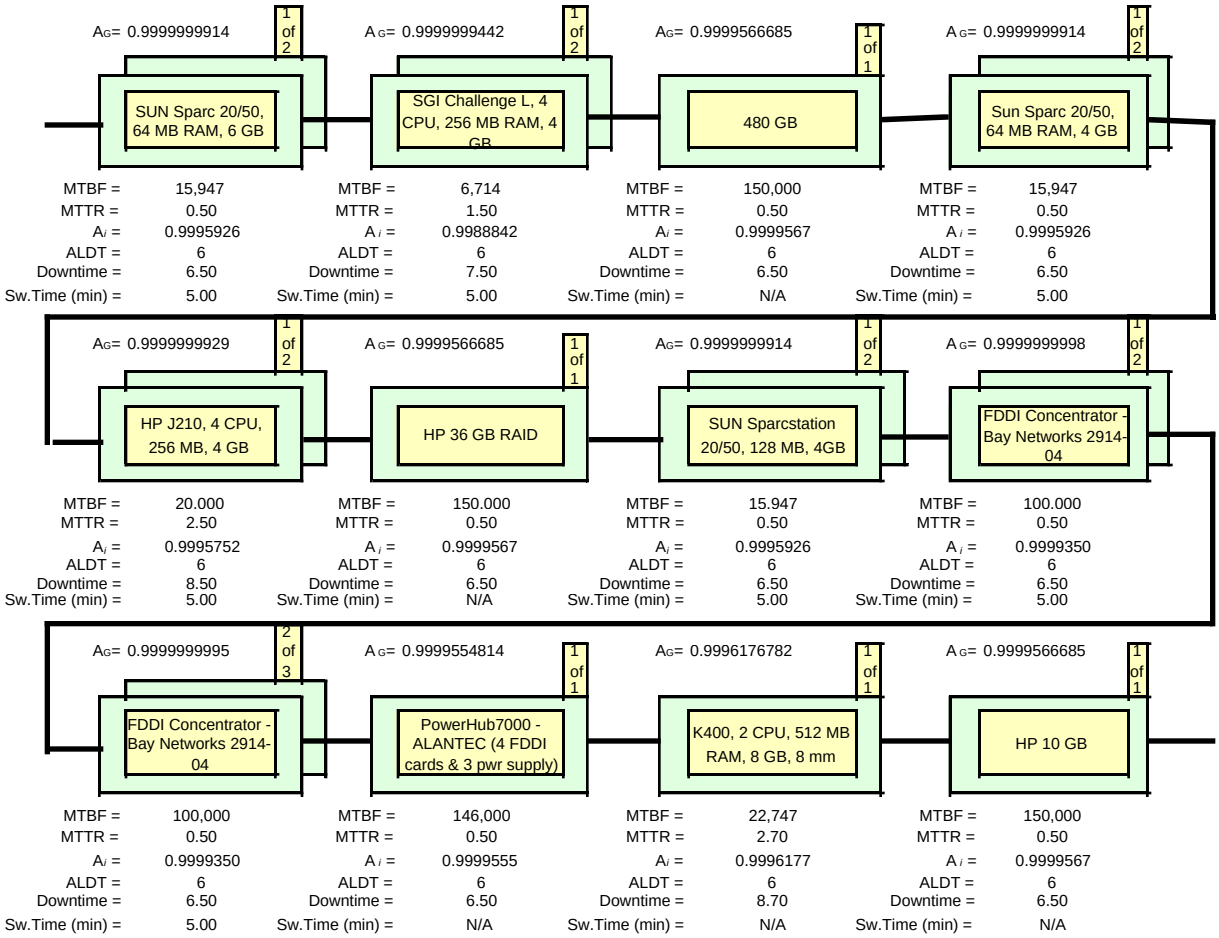
AG= 0.9999999914
1 of 2
SUN Sparc 20/50, 64 MB RAM, 6 GB
MTBF = 15,947
MTTR = 0.50
Ai = 0.9995926
ALDT = 6
Downtime = 6.50
Sw.Time (min) = 5.00
AG= 0.9999999442
1 of 2
SGI Challenge L, 4 CPU, 256 MB RAM, 4 GB
MTBF = 6,714
MTTR = 1.50
Ai = 0.9988842
ALDT = 6
Downtime = 7.50
Sw.Time (min) = 5.00
AG= 0.9999566685
1 of 1
480 GB
MTBF = 150,000
MTTR = 0.50
Ai = 0.9999567
ALDT = 6
Downtime = 6.50
Sw.Time (min) = N/A
AG= 0.9999999914
1 of 2
Sun Sparc 20/50, 64 MB RAM, 4 GB
MTBF = 15,947
MTTR = 0.50
Ai = 0.9995926
ALDT = 6
Downtime = 6.50
Sw.Time (min) = 5.00
AG= 0.9999999929
1 of 2
HP J210, 4 CPU, 256 MB, 4 GB
MTBF = 20.000
MTTR = 2.50
Ai = 0.9995752
ALDT = 6
Downtime = 8.50
Sw.Time (min) = 5.00
AG= 0.9999566685
1 of 1
HP 36 GB RAID
MTBF = 150.000
MTTR = 0.50
Ai = 0.9999567
ALDT = 6
Downtime = 6.50
Sw.Time (min) = N/A
AG= 0.9999999914
1 of 2
SUN Sparcstation 20/50, 128 MB, 4GB
MTBF = 15.947
MTTR = 0.50
Ai = 0.9995926
ALDT = 6
Downtime = 6.50
Sw.Time (min) = 5.00
AG= 0.9999999998
1 of 2
FDDI Concentrator - Bay Networks 2914-04
MTBF = 100.000
MTTR = 0.50
Ai = 0.9999350
ALDT = 6
Downtime = 6.50
Sw.Time (min) = 5.00
AG= 0.9999999995
2 of 3
FDDI Concentrator - Bay Networks 2914-04
MTBF = 100,000
MTTR = 0.50
Ai = 0.9999350
ALDT = 6
Downtime = 6.50
Sw.Time (min) = 5.00
AG= 0.9999554814
1 of 1
PowerHub7000 - ALANTEC (4 FDDI cards & 3 pwr supply)
MTBF = 146,000
MTTR = 0.50
Ai = 0.9999555
ALDT = 6
Downtime = 6.50
Sw.Time (min) = N/A
AG= 0.9996176782
1 of 1
K400, 2 CPU, 512 MB RAM, 8 GB, 8 mm
MTBF = 22,747
MTTR = 2.70
Ai = 0.9996177
ALDT = 6
Downtime = 8.70
Sw.Time (min) = N/A
AG= 0.9999566685
1 of 1
HP 10 GB
MTBF = 150,000
MTTR = 0.50
Ai = 0.9999567
ALDT = 6
Downtime = 6.50
Sw.Time (min) = N/A

EOSD 4000 Ao/MDT Analytical Results for NSIDC

EOSD4000: Function Of IMS Data Management and Maintenance Interface (Ao>=.96, MDT<=4.0 hrs)

Subsystem Description	Equipment Description	Model/Part Number	MTBF (hour)	MTTR (hour)	Admin. Logistic Delay Time (hour)	Switchover Time (min)	Total Downtime (hour)	Number of Units Required (m)	Total Number Of Units (n)	Redundancy	Unit Availability (Ai)	P	Redundant Group Availability (m out of n)
Data Manag.	DMG SERVER	K400, 2 CPU, 512 MB RAM, 8 GB, 8 mm	22,747	2.7	6	N/A	8.70	1	1	N/A	0.9996176782	N/A	0.999617678
Data Manag.	RAID DISK	HP 10 GB	150,000	0.5	6	N/A	6.50	1	1	N/A	0.9999566685	N/A	0.999956669
Data Manag.	DATA SPECIALIST W/S	SUN Sparc 20/50, 64 MB RAM, 6 GB	15,947	0.5	6	5.00	6.50	1	3	standby off-line	0.9995925659	1.0	1.000000000
ACM	OPS WORKSTATION	Sun Sparc 20/50, 64 MB RAM, 4 GB	15,947	0.5	6	5.00	6.50	1	2	standby off-line	0.9995925659	1.0	0.999999991
DRP	DBMS SERVER	SGI ChallengeDM, 2CPU, 256 MB RAM, 4 GB	5,914	1.5	6	5.00	7.50	1	2	standby off-line	0.9987334290	1.0	0.999999928
DRP	RAID DISK	10 GB	150,000	0.5	6	N/A	6.50	1	1	N/A	0.9999566685	N/A	0.999956669
MSS/CSS	MSS/CSS SERVER	HP J210, 4 CPU, 256 MB, 4 GB	20000	2.5	6	5.00	8.50	1	2	standby off-line	0.9995751805	1.0	0.999999993
MSS	RAID	HP 36 GB RAID	150,000	0.5	6	N/A	6.50	1	1	N/A	0.9999566685	N/A	0.999956669
MSS	MSS WS	SUN Sparcstation 20/50, 128 MB, 4GB	15,947	0.5	6	5.00	6.50	1	2	standby off-line	0.9995925659	1.0	0.999999991
ISS	FDDI CONCENTRATOR	FDDI Concentrator - Bay Networks 2914-04	100,000	0.5	6	5.00	6.50	1	2	standby off-line	0.9999350042	1.0	1.000000000
ISS	FDDI CONCENTRATOR	FDDI Concentrator - Bay Networks 2914-04	100,000	0.5	6	5.00	6.50	2	3	standby off-line	0.9999350042	1.0	1.000000000
ISS	FDDI SWITCH	PowerHub7000 - ALANTEC (4 FDDI cards & 3 pwr supply)	146,000	0.5	6	N/A	6.50	1	1	N/A	0.9999554814	N/A	0.999955481
													0.9999121354
		EOSD4000 Ao =	0.99991										
		EOSD4000 MDT =	0.67645										

EOSD 4000 Ao/MDT Analytical Results for NSIDC (continued)

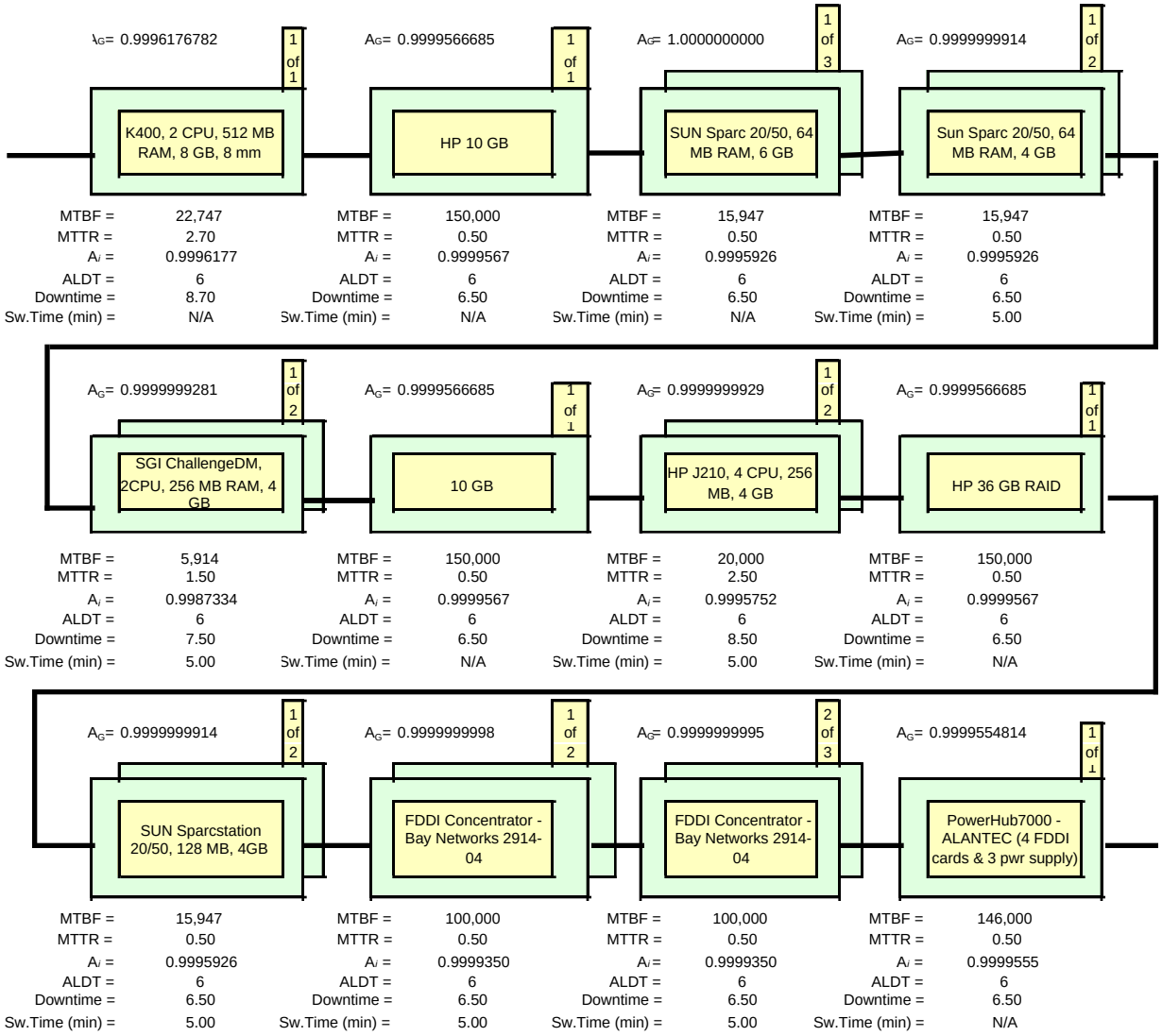

EOSD 3700 Ao/MDT Analytical Results for GSFC

EOSD3700: Function of Planning and Data Processing (Ao>=.96, MDT<=4.0 hrs)

Subsystem Description	Equipment Description	Model/Part Number	MTBF (hour)	MTTR (hour)	Admin. Logistic Delay Time (hour)	Switchover Time (min)	Total Downtime (hour)	Number of Units Required (m)	Total Number Of Units (n)	Redundancy	Unit Availability (Ai)	P	Redundant Group Availability (m out of n)
Science Proc,	SCIENCE PROCESSOR	SGI Pwr Chal. XL, 12 CPU, 2 GB, 12 GB, HiPPI	3,458	1.5	6	60.00	7.50	1	1	N/A	0.9978358101	N/A	0.997835810
Science Proc,	RAID DISK	SGI 246 GB	150,000	0.5	6	N/A	6.50	1	1	N/A	0.9999566685	N/A	0.999956669
Science Proc,	TAPE STACKER	3, 8mm Drives w/stacker - Exabyte	160,000	0.3	6	N/A	6.25	1	1	N/A	0.9999609390	N/A	0.999960939
Science Proc,	X TERMINAL	X TERMINAL, NCD HMX Pro, 16 MB RAM	27,548	0.5	6	5.00	6.50	6	7	standby off-line	0.9997641039	1.0	0.999999965
Science Proc,	SCIENCE PROCESSOR	SGI ChallengeDM, 2CPU,256M RAM, 4 (AI&T)	5,914	1.5	6	N/A	7.50	1	1	N/A	0.9987334290	N/A	0.998733429
Science Proc,	RAID	SGI68 GB	150,000	0.5	6	N/A	6.50	1	1	N/A	0.9999566685	N/A	0.999956669
Science Proc,	SCIENCE PROCESSOR	SGI Power Challenge XL, 16 CPU, 2 GB RAM, 18 GB, HiPPI	3,062	1.5	6	60.00	7.50	1	1	N/A	0.9975566053	N/A	0.997556605
Science Proc,	RAID	SGI 432 GB	150,000	0.5	6	N/A	6.50	1	1	N/A	0.9999566685	N/A	0.999956669
Science Proc,	QUEUING SVR/RAID	SUN Sparc 20/712/ 12 GB RAID	3,660	1.0	6	5.00	7.00	1	2	standby off-line	0.9980910826	1.0	0.999999825
Planning	PLN DBMS SVR	SUN Ultra 8-slot, 512 MB RAM, 6 GB	7,185	0.5	6	5.00	6.50	1	1	N/A	0.9990961552	N/A	0.999096155
Planning	RAID	20 GB	150,000	0.5	6	5.00	6.50	1	1	standby off-line	0.9999566685	1.0	1.000000000
Planning	Prod.Plan/Mgmt WS	SUN Sparc 20/712/ 12 GB RAID	11,337	0.8	6	5.00	6.80	1	2	standby off-line	0.9994005536	1.0	0.999999982 0.993070288
		EOSD3700 Ao =	0.99307										
		EOSD3700 MDT =	2.02627										

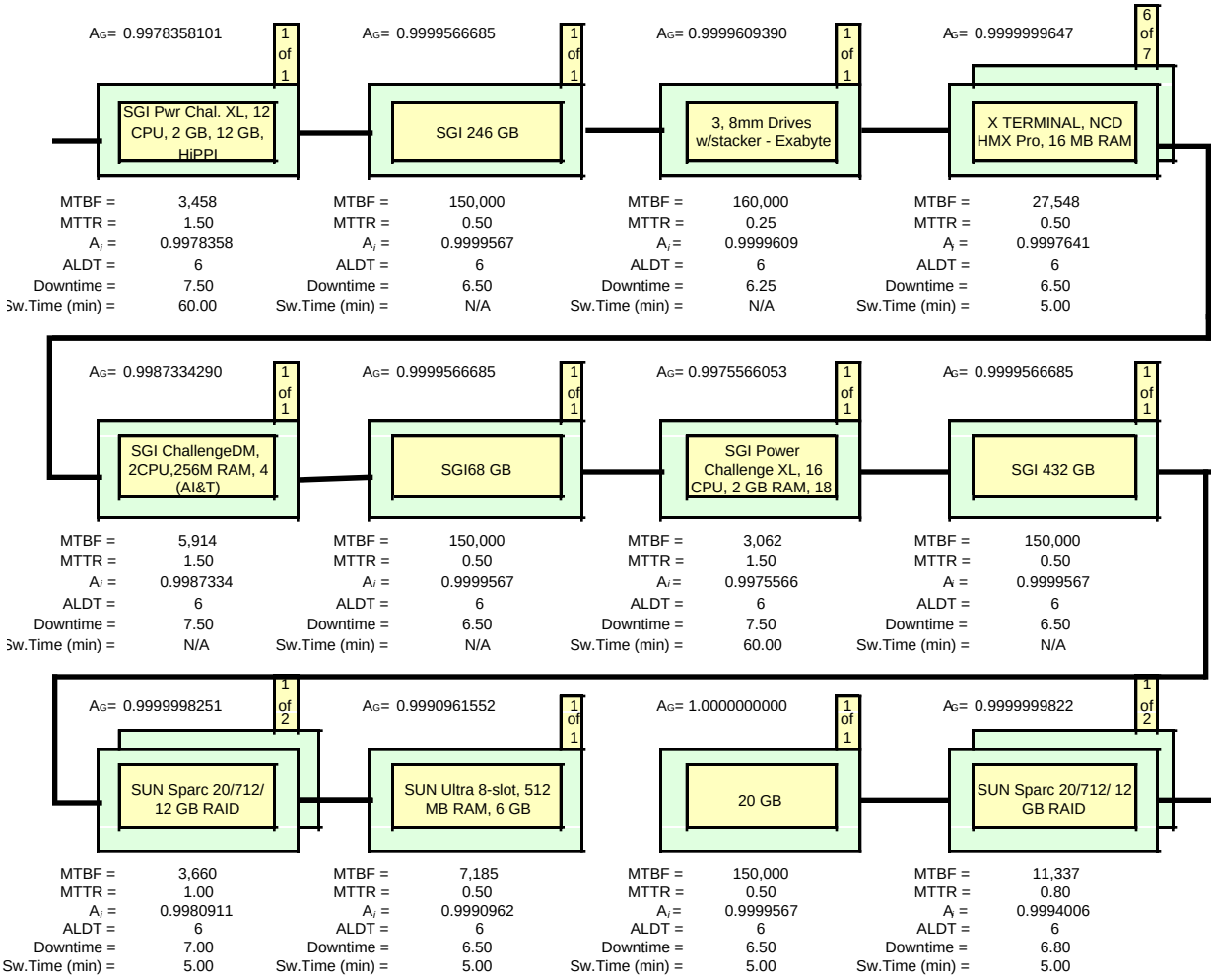
AG= 0.9978358101
1 of 1
SGI Pwr Chal. XL, 12 CPU, 2 GB, 12 GB, HiPPI
MTBF = 3,458
MTTR = 1.50
Ai = 0.9978358
ALDT = 6
Downtime = 7.50
Sw.Time (min) = 60.00
AG= 0.9999566685
1 of 1
SGI 246 GB
MTBF = 150,000
MTTR = 0.50
Ai = 0.9999567
ALDT = 6
Downtime = 6.50
Sw.Time (min) = N/A
AG= 0.9999609390
1 of 1
3, 8mm Drives w/stacker - Exabyte
MTBF = 160,000
MTTR = 0.25
Ai = 0.9999609
ALDT = 6
Downtime = 6.25
Sw.Time (min) = N/A
AG= 0.9999999647
6 of 7
X TERMINAL, NCD HMX Pro, 16 MB RAM
MTBF = 27,548
MTTR = 0.50
Ai = 0.9997641
ALDT = 6
Downtime = 6.50
Sw.Time (min) = 5.00
AG= 0.9987334290
1 of 1
SGI ChallengeDM, 2CPU,256M RAM, 4 (AI&T)
MTBF = 5,914
MTTR = 1.50
Ai = 0.9987334
ALDT = 6
Downtime = 7.50
Sw.Time (min) = N/A
AG= 0.9999566685
1 of 1
SGI68 GB
MTBF = 150,000
MTTR = 0.50
Ai = 0.9999567
ALDT = 6
Downtime = 6.50
Sw.Time (min) = N/A
AG= 0.9975566053
1 of 1
SGI Power Challenge XL, 16 CPU, 2 GB RAM, 18
MTBF = 3,062
MTTR = 1.50
Ai = 0.9975566
ALDT = 6
Downtime = 7.50
Sw.Time (min) = 60.00
AG= 0.9999566685
1 of 1
SGI 432 GB
MTBF = 150,000
MTTR = 0.50
Ai = 0.9999567
ALDT = 6
Downtime = 6.50
Sw.Time (min) = N/A
AG= 0.9999998251
1 of 2
SUN Sparc 20/712/ 12 GB RAID
MTBF = 3,660
MTTR = 1.00
Ai = 0.9980911
ALDT = 6
Downtime = 7.00
Sw.Time (min) = 5.00
AG= 0.9990961552
1 of 1
SUN Ultra 8-slot, 512 MB RAM, 6 GB
MTBF = 7,185
MTTR = 0.50
Ai = 0.9990962
ALDT = 6
Downtime = 6.50
Sw.Time (min) = 5.00
AG= 1.0000000000
1 of 1
20 GB
MTBF = 150,000
MTTR = 0.50
Ai = 0.9999567
ALDT = 6
Downtime = 6.50
Sw.Time (min) = 5.00
AG= 0.9999999822
1 of 2
SUN Sparc 20/712/ 12 GB RAID
MTBF = 11,337
MTTR = 0.80
Ai = 0.9994006
ALDT = 6
Downtime = 6.80
Sw.Time (min) = 5.00

EOSD 3900 Ao/MDT Analytical Results for GSFC

EOSD3900: Function of Receiving Science Data (Ao>=.9990, MDT<=2.0 hrs)

Subsystem Description	Equipment Description	Model/Part Number	MTBF (hour)	MTTR (hour)	Admin. Logistic Delay Time (hour)	Switchover Time (min)	Total Downtime (hour)	Number of Units Required (m)	Total Number Of Units (n)	Redundancy	Unit Availability (Ai)	P	Redundant Group Availability (m out of n)
Ingest	RAID	SGI 108 GB RAID	150,000	0.5	6	N/A	6.50	1	1	N/A	0.9999566685	N/A	0.999956669
Ingest	INGEST SVR/8mm Drives	SGI Challenge L, 4 CPU/3 8mm drives	6,444	1.5	6	5.00	7.50	1	2	standby off-line	0.9988374797	1.0	1.000000000
Ingest	X TERMINAL	X TERMINAL, NCD HMX Pro, 16 MB RAM	27,548	0.5	6	N/A	6.50	1	1	N/A	0.9997641039	N/A	0.999764104
Ingest	ARCHIVE ROBOTICS(1)	ARCHIVE ROBOTICS - 1 Tower, 1 Arm	28,048	1.0	6	N/A	7.00	1	1	N/A	0.9997504901	N/A	0.999750490
Ingest	LINEAR MAG DR(2)	NTP Linear Tape Drive, 3590	40,000	1.0	6	15.00	7.00	1	2	standby off-line	0.9998250306	1.0	0.999999995
MSS/CSS	MSS/CSS SERVER	HP J210, 4 CPU, 256 MB, 4 GB	20000	2.5	6	5.00	8.50	1	2	standby off-line	0.9995751805	1.0	0.999999993
MSS	RAID	HP 36 GB RAID	150,000	0.5	6	N/A	6.50	1	1	N/A	0.9999566685	N/A	0.999956669
MSS	MSS WS	SUN Sparcstation 20/50, 128 MB, 4GB	15,947	0.5	6	5.00	6.50	1	2	standby off-line	0.9995925659	1.0	0.999999991
ISS	FDDI CONCENTRATOR	FDDI Concentrator - Bay Networks 2914-04	100,000	0.5	6	5.00	6.50	1	2	standby off-line	0.9999350042	1.0	1.000000000
ISS	FDDI CONCENTRATOR	FDDI Concentrator - Bay Networks 2914-04	100,000	0.5	6	5.00	6.50	3	4	standby off-line	0.9999350042	1.0	0.999999999
ISS	FDDI SWITCH	PowerHub7000 - ALANTEC (4 FDDI cards & 3 pwr supply)	146,000	0.5	6	N/A	6.50	1	1	N/A	0.9999554814	N/A	0.999955481
													0.9997071481
		EOSD3900 Ao =	0.99971										
		EOSD3900 MDT =	1.55086										

Note: (1) Robot Failure Rate is 25% Duty cycle
(2) Tape Drive Failure Rate is 25% Duty cycle

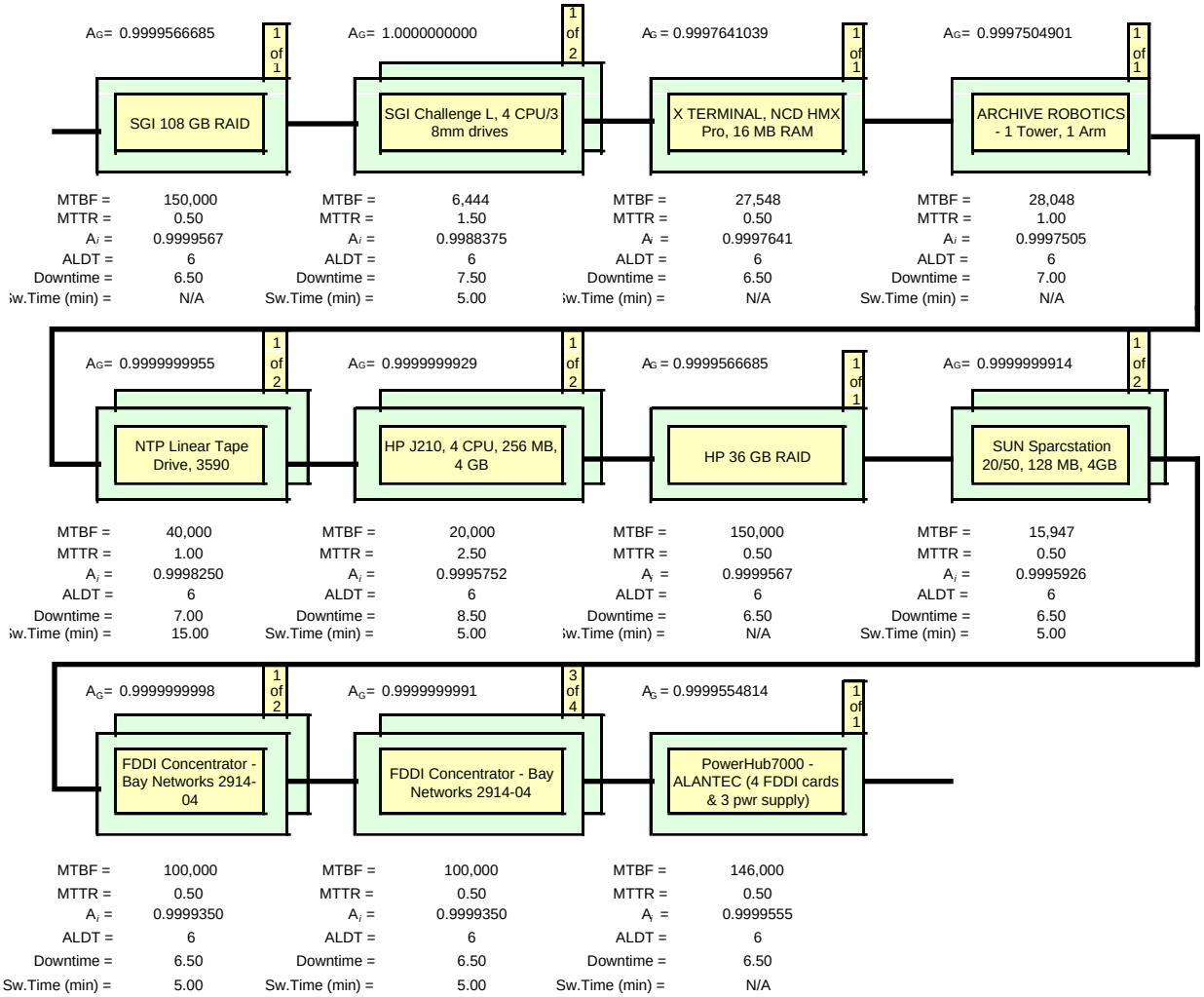
AG= 0.9999566685
1 of 1
SGI 108 GB RAID
MTBF = 150,000
MTTR = 0.50
Ai = 0.9999567
ALDT = 6
Downtime = 6.50
Sw.Time (min) = N/A
AG= 1.0000000000
1 of 2
SGI Challenge L, 4 CPU/3 8mm drives
MTBF = 6,444
MTTR = 1.50
Ai = 0.9988375
ALDT = 6
Downtime = 7.50
Sw.Time (min) = 5.00
AG = 0.9997641039
1 of 1
X TERMINAL, NCD HMX Pro, 16 MB RAM
MTBF = 27,548
MTTR = 0.50
Ai = 0.9997641
ALDT = 6
Downtime = 6.50
Sw.Time (min) = N/A
AG= 0.9997504901
1 of 1
ARCHIVE ROBOTICS - 1 Tower, 1 Arm
MTBF = 28,048
MTTR = 1.00
Ai = 0.9997505
ALDT = 6
Downtime = 7.00
Sw.Time (min) = N/A
AG= 0.9999999955
1 of 2
NTP Linear Tape Drive, 3590
MTBF = 40,000
MTTR = 1.00
Ai = 0.9998250
ALDT = 6
Downtime = 7.00
Sw.Time (min) = 15.00
AG= 0.9999999929
1 of 2
HP J210, 4 CPU, 256 MB, 4 GB
MTBF = 20,000
MTTR = 2.50
Ai = 0.9995752
ALDT = 6
Downtime = 8.50
Sw.Time (min) = 5.00
AG = 0.9999566685
1 of 1
HP 36 GB RAID
MTBF = 150,000
MTTR = 0.50
Ai = 0.9999567
ALDT = 6
Downtime = 6.50
Sw.Time (min) = N/A
AG= 0.9999999914
1 of 2
SUN Sparcstation 20/50, 128 MB, 4GB
MTBF = 15,947
MTTR = 0.50
Ai = 0.9995926
ALDT = 6
Downtime = 6.50
Sw.Time (min) = 5.00
AG= 0.9999999998
1 of 2
FDDI Concentrator - Bay Networks 2914-04
MTBF = 100,000
MTTR = 0.50
Ai = 0.9999350
ALDT = 6
Downtime = 6.50
Sw.Time (min) = 5.00
AG= 0.9999999991
3 of 4
FDDI Concentrator - Bay Networks 2914-04
MTBF = 100,000
MTTR = 0.50
Ai = 0.9999350
ALDT = 6
Downtime = 6.50
Sw.Time (min) = 5.00
AG = 0.9999554814
1 of 1
PowerHub7000 - ALANTEC (4 FDDI cards & 3 pwr supply)
MTBF = 146,000
MTTR = 0.50
Ai = 0.9999555
ALDT = 6
Downtime = 6.50
Sw.Time (min) = N/A

EOSD 3920 Ao/MDT Analytical Results for GSFC

EOSD3920:Function of Archiving And Distributing Data (Ao>=.980, MDT<=2.0 hrs)

Subsystem Description	Equipment Description	Model/Part Number	MTBF (hour)	MTTR (hour)	Admin. Logistic Delay Time (hour)	Switchover Time (min)	Total Downtime (hour)	Number of Units Required (m)	Total Number Of Units (n)	Redundancy	Unit Availability (Ai)	P	Redundant Group Availability (m out of n)
ACM	APC SERVER	SGI Challenge L, 4 CPU, 256 MB RAM, 4 GB	6,714	1.5	6	5.00	7.50	1	2	standby off-line	0.9988841776	1.0	0.999999944
ACM	RAID DISK	480 GB	150,000	0.5	6	N/A	6.50	1	1	N/A	0.9999566685	N/A	0.999956669
ACM	OPS WORKSTATION	Sun Sparc 20/50, 64 MB RAM, 4 GB	15,947	0.5	6	5.00	6.50	1	2	standby off-line	0.9995925659	1.0	0.999999991
DIP	DISTRIBUTION SERVER	SUN Sparc 20/712, 256 MB RAM, 6 GB	3,752	1.0	6	5.00	7.00	1	2	standby off-line	0.9981378026	1.0	0.999999834
DIP	RAID DISK	240 GB	150,000	0.5	6	N/A	6.50	1	1	N/A	0.9999566685	N/A	0.999956669
DIP	TAPE STACKER	3, 8mm Drives w/stacker - Exabyte	160,000	0.3	6	N/A	6.25	1	1	N/A	0.9999609390	N/A	0.999960939
DIP	TAPE STACKER	3, 4mm Drives w/stacker - Exabyte	146,000	0.5	6	N/A	6.50	1	1	N/A	0.9999554814	N/A	0.999955481
DIP	CD ROM (1)	CD ROM, Recordable, JVC	58,392	0.5	6	N/A	6.50	1	1	N/A	0.9998886958	N/A	0.999888696
DIP	TAPE DRIVE (1)	3480/3490 TAPE DRIVE	140,000	0.5	6	N/A	6.50	1	1	N/A	0.9999535736	N/A	0.999953574
DIP	TAPE DRIVE (1)	6250 BPI Tape Drive	66,868	1.0	6	N/A	7.00	1	1	N/A	0.9998953271	N/A	0.999895327
WKS	WKS HOST	SGI Challenge L, 4 CPU, 256 MB RAM, 4 GB	6,714	1.5	6	5.00	7.50	1	2	standby off-line	0.9988841776	1.0	0.999999944
WKS	RAID DISK	SGI 360 GB	150,000	0.5	6	N/A	6.50	1	1	N/A	0.9999566685	N/A	0.999956669
DRP	FSMS SERVER/RAID	SGI Challenge XL, 4 CPU/85GB RAID	4,523	1.5	6	5.00	7.50	2	3	standby off-line	0.9983445536	1.0	0.999999725
DRP	ARCHIVE ROBOTICS(2)	STK Powderhorn w/16 Drives	8,515	1.0	6	N/A	7.00	3	3	N/A	0.9991785966	N/A	0.997539831
DRP	ARCHIVE ROBOTICS (2)	STK Powderhorn w/12 Drives	8,515	1.0	6	N/A	7.00	1	1	N/A	0.9991785966	N/A	0.999178597
DRP	ARCHIVE ROBOTICS (2)	EMASS AML, Model 2	11,867	1.0	6	N/A	7.00	1	1	N/A	0.9994104767	N/A	0.999410477
DRP	TAPE DRIVE (2)	3590 Tape Drive	16,667	1.0	6	N/A	7.00	3	3	N/A	0.9995801847	N/A	0.998741611
DRP	DBMS SERVER	SGI Challenge XL, 2 CPU, 256 MB RAM, 6 GB	5,109	1.5	6	5.00	7.50	1	2	standby off-line	0.9985341542	1.0	0.999999904
DRP	RAID DISK	43 GB	150,000	0.5	6	N/A	6.50	1	1	N/A	0.9999566685	N/A	0.999956669
DDS	DOCUMENT SERVER	SUN Sparcstation 20/712, 256MB, 6GB	3,752	1.0	6	5.00	7.00	1	2	standby off-line	0.9981378026	1.0	0.999999834
DDS	DOCUMENT SVR RAID	12GB	150,000	0.5	6	N/A	6.50	1	1	N/A	0.9999566685	N/A	0.999956669
MSS/CSS	MSS/CSS SERVER	HP J210, 4 CPU, 256 MB, 4 GB	20000	2.5	6	5.00	8.50	1	2	standby off-line	0.9995751805	1.0	0.999999993
MSS	RAID	HP 36 GB RAID	150,000	0.5	6	N/A	6.50	1	1	N/A	0.9999566685	N/A	0.999956669
MSS	MSS WS	SUN Sparcstation 20/50, 128 MB, 4GB	15,947	0.5	6	5.00	6.50	1	2	standby off-line	0.9995925659	1.0	0.999999991
ISS	FDDI CONCENTRATOR	FDDI Concentrator - Bay Networks 2914-04	100,000	0.5	6	5.00	6.50	1	2	standby off-line	0.9999350042	1.0	1.000000000
ISS	FDDI CONCENTRATOR	FDDI Concentrator - Bay Networks 2914-04	100,000	0.5	6	5.00	6.50	2	3	standby off-line	0.9999350042	1.0	1.000000000
ISS	FDDI SWITCH	PowerHub7000 - ALANTEC (4 FDDI cards & 3 pwr supply)	146,000	0.5	6	N/A	6.50	1	1	N/A	0.9999554814	N/A	0.999955481

EOSD 3920 Ao/MDT Analytical Results for GSFC (continued)

A_G =	0.9999999442	A_G =	0.9999566685	A_G =	0.9999999914	A_G =	0.9999998335
1 of 2		1 of 1		1 of 2		1 of 2	
SGI Challenge L, 4 CPU, 256 MB RAM, 4		480 GB		Sun Sparc 20/50, 64 MB RAM, 4 GB		SUN Sparc 20/712, 256 MB RAM, 6 GB	
MTBF =	6,714	MTBF =	150,000	MTBF =	15,947	MTBF =	3,752
MTTR =	1.50	MTTR =	0.50	MTTR =	0.50	MTTR =	1.00
A_i =	0.9988842	A_i =	0.9999567	A_i =	0.9995926	A_i =	0.9981378
ALDT =	6	ALDT =	6	ALDT =	6	ALDT =	6
Downtime =	7.50	Downtime =	6.50	Downtime =	6.50	Downtime =	7.00
Sw.Time (min) =	5.00	Sw.Time (min) =	N/A	Sw.Time (min) =	5.00	Sw.Time (min) =	5.00

A_G =	0.9999566685	A_G =	0.9999609390	A_G =	0.9999554814	A_G =	0.9998886958
1 of 1		1 of 1		1 of 1		1 of 1	
240 GB		3, 8mm Drives w/stacker - Exabyte		3, 4mm Drives w/stacker - Exabyte		CD ROM, Recordable, JVC	
MTBF =	150,000	MTBF =	160,000	MTBF =	146,000	MTBF =	58,392
MTTR =	0.50	MTTR =	0.25	MTTR =	0.50	MTTR =	0.50
A_i =	0.9999567	A_i =	0.9999609	A_i =	0.9999555	A_i =	0.9998887
ALDT =	6	ALDT =	6	ALDT =	6	ALDT =	6
Downtime =	6.50	Downtime =	6.25	Downtime =	6.50	Downtime =	6.50
Sw.Time (min) =	N/A	Sw.Time (min) =	N/A	Sw.Time (min) =	N/A	Sw.Time (min) =	N/A
	N/A		N/A		N/A		N/A

A_G =	0.9999535736	A_G =	0.9998953271	A_G =	0.9999999442	A_G =	0.9999566685
1 of 1		1 of 1		1 of 2		1 of 1	
3480/3490 TAPE DRIVE		6250 BPI Tape Drive		SGI Challenge L, 4 CPU, 256 MB RAM, 4		SGI 360 GB	
MTBF =	140,000	MTBF =	66,868	MTBF =	6,714	MTBF =	150,000
MTTR =	0.50	MTTR =	1.00	MTTR =	1.50	MTTR =	0.50
A_i =	0.9999536	A_i =	0.9998953	A_i =	0.9988842	A_i =	0.9999567
ALDT =	6	ALDT =	6	ALDT =	6	ALDT =	6
Downtime =	6.50	Downtime =	7.00	Downtime =	7.50	Downtime =	6.50
Sw.Time (min) =	N/A	Sw.Time (min) =	N/A	Sw.Time (min) =	5.00	Sw.Time (min) =	N/A

A_G =	0.9999997248	A_G =	0.9975398313	A_G =	0.9991785966	A_G =	0.9994104767
2 of 3		3 of 3		1 of 1		1 of 1	
SGI Challenge XL, 4 CPU/85GB RAID		STK Powderhorn w/16 Drives		STK Powderhorn w/12 Drives		EMASS AML, Model 2	
MTBF =	4,523	MTBF =	8,515	MTBF =	8,515	MTBF =	11,867
MTTR =	1.50	MTTR =	1.00	MTTR =	1.00	MTTR =	1.00
A_i =	0.9983446	A_i =	0.9991786	A_i =	0.9991786	A_i =	0.9994105
ALDT =	6	ALDT =	6	ALDT =	6	ALDT =	6
Downtime =	7.50	Downtime =	7.00	Downtime =	7.00	Downtime =	7.00
Sw.Time (min) =	5.00	Sw.Time (min) =	N/A	Sw.Time (min) =	N/A	Sw.Time (min) =	N/A

A_G =	0.9987416107	A_G =	0.9999999037	A_G =	0.9999566685	A_G =	0.9999998335
3 of 3		1 of 2		1 of 1		1 of 2	
3590 Tape Drive		SGI Challenge XL, 2 CPU, 256 MB RAM, 6		43 GB		SUN Sparcstation 20/712, 256MB, 6GB	
MTBF =	16,667	MTBF =	5,109	MTBF =	150,000	MTBF =	3,752
MTTR =	1.00	MTTR =	1.50	MTTR =	0.50	MTTR =	1.00
A_i =	0.9995802	A_i =	0.9985342	A_i =	0.9999567	A_i =	0.9981378
ALDT =	6	ALDT =	6	ALDT =	6	ALDT =	6
Downtime =	7.00	Downtime =	7.50	Downtime =	6.50	Downtime =	7.00
Sw.Time (min) =	N/A	Sw.Time (min) =	5.00	Sw.Time (min) =	N/A	Sw.Time (min) =	5.00

A_G =	0.9999999929	A_G =	0.9999566685	A_G =	0.9999999914	A_G =	0.9999999998
1 of 2		1 of 1		1 of 2		1 of 2	
HP J210, 4 CPU, 256 MB, 4 GB		HP 36 GB RAID		SUN Sparcstation 20/50, 128 MB, 4GB		FDDI Concentrator - Bay Networks 2914-	
MTBF =	20,000	MTBF =	150,000	MTBF =	15,947	MTBF =	100,000
MTTR =	2.50	MTTR =	0.50	MTTR =	0.50	MTTR =	0.50
A_i =	0.9995752	A_i =	0.9999567	A_i =	0.9995926	A_i =	0.9999350
ALDT =	6	ALDT =	6	ALDT =	6	ALDT =	6
Downtime =	8.50	Downtime =	6.50	Downtime =	6.50	Downtime =	6.50
Sw.Time (min) =	5.00	Sw.Time (min) =	N/A	Sw.Time (min) =	5.00	Sw.Time (min) =	5.00

A_G =	0.9999999995	A_G =	0.9999554814
2 of 3		1 of 1	
FDDI Concentrator - Bay Networks 2914-04		PowerHub7000 - ALANTEC (4 FDDI	
MTBF =	100,000	MTBF =	146,000
MTTR =	0.50	MTTR =	0.50
A_i =	0.9999350	A_i =	0.9999555
ALDT =	6	ALDT =	6
Downtime =	6.50	Downtime =	6.50
Sw.Time (min) =	5.00	Sw.Time (min) =	N/A

EOSD 3930 Ao/MDT Analytical Results for GSFC

EOSD3930: User Interfaces to IMS Services at Individual DAAC Site (Ao>=.993, MDT<=2.0 hrs)

Subsystem Description	Equipment Description	Model/Part Number	MTBF (hour)	MTTR (hour)	Admin. Logistic Delay Time	Switch over Time (min)	Total Downtime (hour)	Number of Units Required (m)	Total Number Of Units (n)	Redundancy	Unit Availability (Ai)	P	Redundant Group Availability (m out of n)
Data Manag.	DMG SERVER	K400, 2 CPU, 512 MB RAM, 8 GB, 8 mm	22,747	2.7	6	N/A	8.70	1	1	N/A	0.9996176782	N/A	0.999617678
Data Manag.	RAID DISK	HP 10 GB	150,000	0.5	6	N/A	6.50	1	1	N/A	0.9999566685	N/A	0.999956669
ACM	APC SERVER	SGI Challenge L, 4 CPU, 256 MB RAM, 4 GB	6,714	1.5	6	5.00	7.50	1	2	standby off-line	0.9988841776	1.0	0.999999944
ACM	RAID DISK	480 GB	150,000	0.5	6	N/A	6.50	1	1	N/A	0.9999566685	N/A	0.999956669
ACM	OPS WORKSTATION	Sun Sparc 20/50, 64 MB RAM, 4 GB	15,947	0.5	6	5.00	6.50	1	2	standby off-line	0.9995925659	1.0	0.999999991
DRP	DBMS SERVER	SGI Challenge XL, 2 CPU, 256 MB RAM, 6 GB	5,109	1.5	6	5.00	7.50	1	2	standby off-line	0.9985341542	1.0	0.999999904
DRP	RAID DISK	27 GB	150,000	0.5	6	N/A	6.50	1	1	N/A	0.9999566685	N/A	0.999956669
MSS/CSS	MSS/CSS SERVER	HP J210, 4 CPU, 256 MB, 4 GB	20000	2.5	6	5.00	8.50	1	2	standby off-line	0.9995751805	1.0	0.999999993
MSS	RAID	HP 36 GB RAID	150,000	0.5	6	N/A	6.50	1	1	N/A	0.9999566685	N/A	0.999956669
MSS	MSS WS	SUN Sparcstation 20/50, 128 MB, 4GB	15,947	0.5	6	5.00	6.50	1	2	standby off-line	0.9995925659	1.0	0.999999991
ISS	FDDI CONCENTRATOR	FDDI Concentrator - Bay Networks 2914-04	100,000	0.5	6	5.00	6.50	1	2	standby off-line	0.9999350042	1.0	1.000000000
ISS	FDDI CONCENTRATOR	FDDI Concentrator - Bay Networks 2914-04	100,000	0.5	6	5.00	6.50	3	4	standby off-line	0.9999350042	1.0	0.999999999
ISS	FDDI SWITCH	PowerHub7000 - ALANTEC (4 FDDI cards & 3 pwr supply)	146,000	0.5	6	N/A	6.50	1	1	N/A	0.9999554814	N/A	0.999955481
													0.9998253210
		EOSD3930 Ao =	0.99983										
		EOSD3930 MDT =	0.38722										

EOSD 3930 Ao/MDT Analytical Results for GSFC (continued)

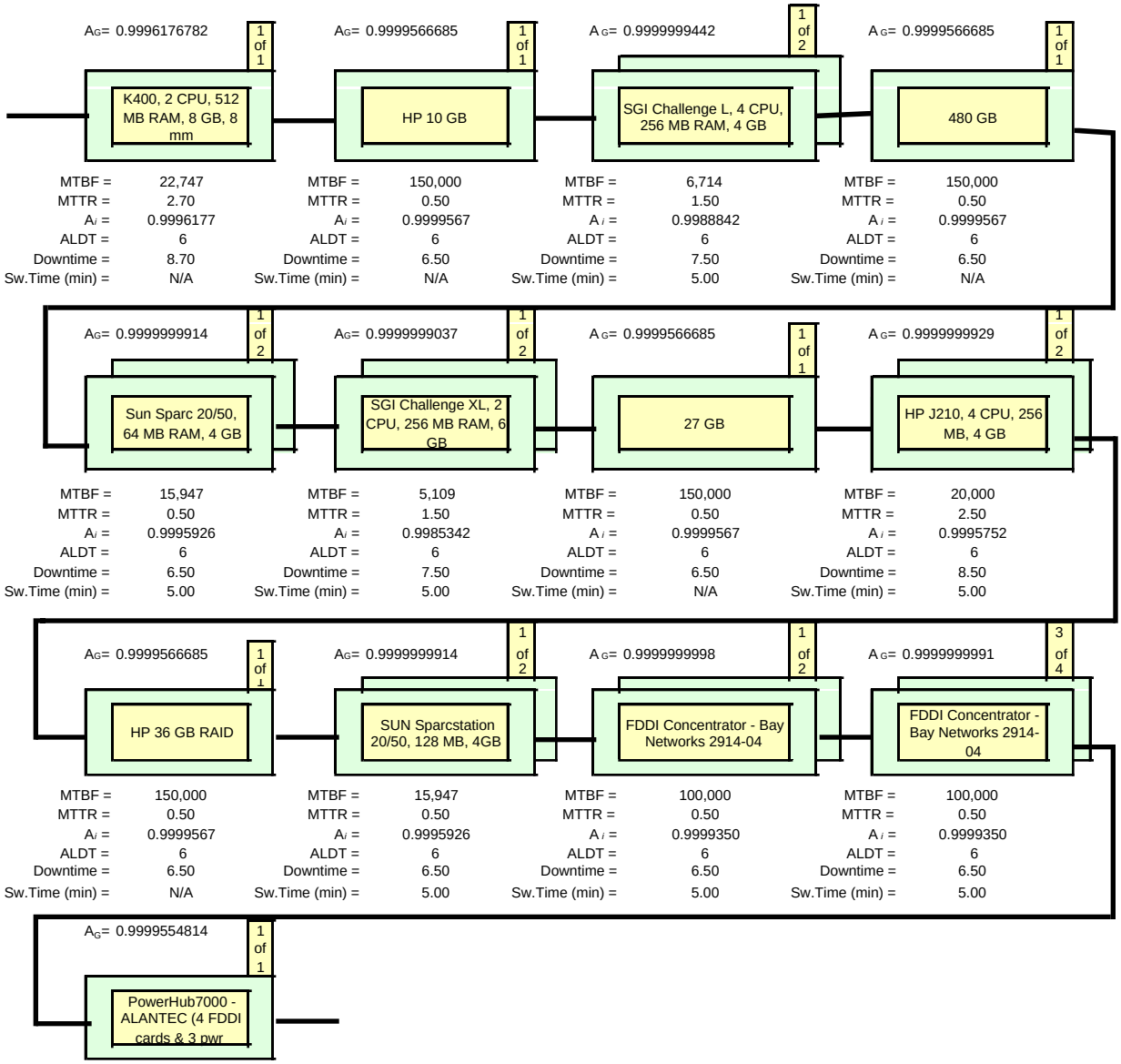

EOSD 3940 Ao/MDT Analytical Results for GSFC

EOSD3940: Function Of Information Searches On The ECS Directory(Ao>=.993, MDT<=2.0 hrs)

Subsystem Description	Equipment Description	Model/Part Number	MTBF (hour)	MTTR (hour)	Admin. Logistic Delay Time (hour)	Switchover Time (min)	Total Downtime (hour)	Number of Units Required (m)	Total Number Of Units (n)	Redundancy	Unit Availability (Ai)	P	Redundant Group Availability (m out of n)
Data Manag.	DMG SERVER	K400, 2 CPU, 512 MB RAM, 8 GB, 8 mm	22,747	2.7	6	N/A	8.70	1	1	N/A	0.9996176782	N/A	0.999617678
Data Manag.	RAID DISK	HP 10 GB	150,000	0.5	6	N/A	6.50	1	1	N/A	0.9999566685	N/A	0.999956669
ACM	APC SERVER	SGI Challenge L, 4 CPU, 256 MB RAM, 4 GB	6,714	1.5	6	5.00	7.50	1	2	standby off-line	0.9988841776	1.0	0.999999944
ACM	RAID DISK	480 GB	150,000	0.5	6	N/A	6.50	1	1	N/A	0.9999566685	N/A	0.999956669
ACM	OPS WORKSTATION	Sun Sparc 20/50, 64 MB RAM, 4 GB	15,947	0.5	6	5.00	6.50	1	2	standby off-line	0.9995925659	1.0	0.999999991
MSS/CSS	MSS/CSS SERVER	HP J210, 4 CPU, 256 MB, 4 GB	20000	2.5	6	5.00	8.50	1	2	standby off-line	0.9995751805	1.0	0.999999993
MSS	RAID	HP 36 GB RAID	150,000	0.5	6	N/A	6.50	1	1	N/A	0.9999566685	N/A	0.999956669
MSS	MSS WS	SUN Sparcstation 20/50, 128 MB, 4GB	15,947	0.5	6	5.00	6.50	1	2	standby off-line	0.9995925659	1.0	0.999999991
ISS	FDDI CONCENTRATOR	FDDI Concentrator - Bay Networks 2914-04	100,000	0.5	6	5.00	6.50	1	2	standby off-line	0.9999350042	1.0	1.000000000
ISS	FDDI CONCENTRATOR	FDDI Concentrator - Bay Networks 2914-04	100,000	0.5	6	5.00	6.50	2	3	standby off-line	0.9999350042	1.0	1.000000000
ISS	FDDI SWITCH	PowerHub7000 - ALANTEC (4 FDDI cards & 3 pwr supply)	146,000	0.5	6	N/A	6.50	1	1	N/A	0.9999554814	N/A	0.999955481
													0.9998687434
		EOSD3940 Ao =	0.99987										
		EOSD3940 MDT =	0.43859										

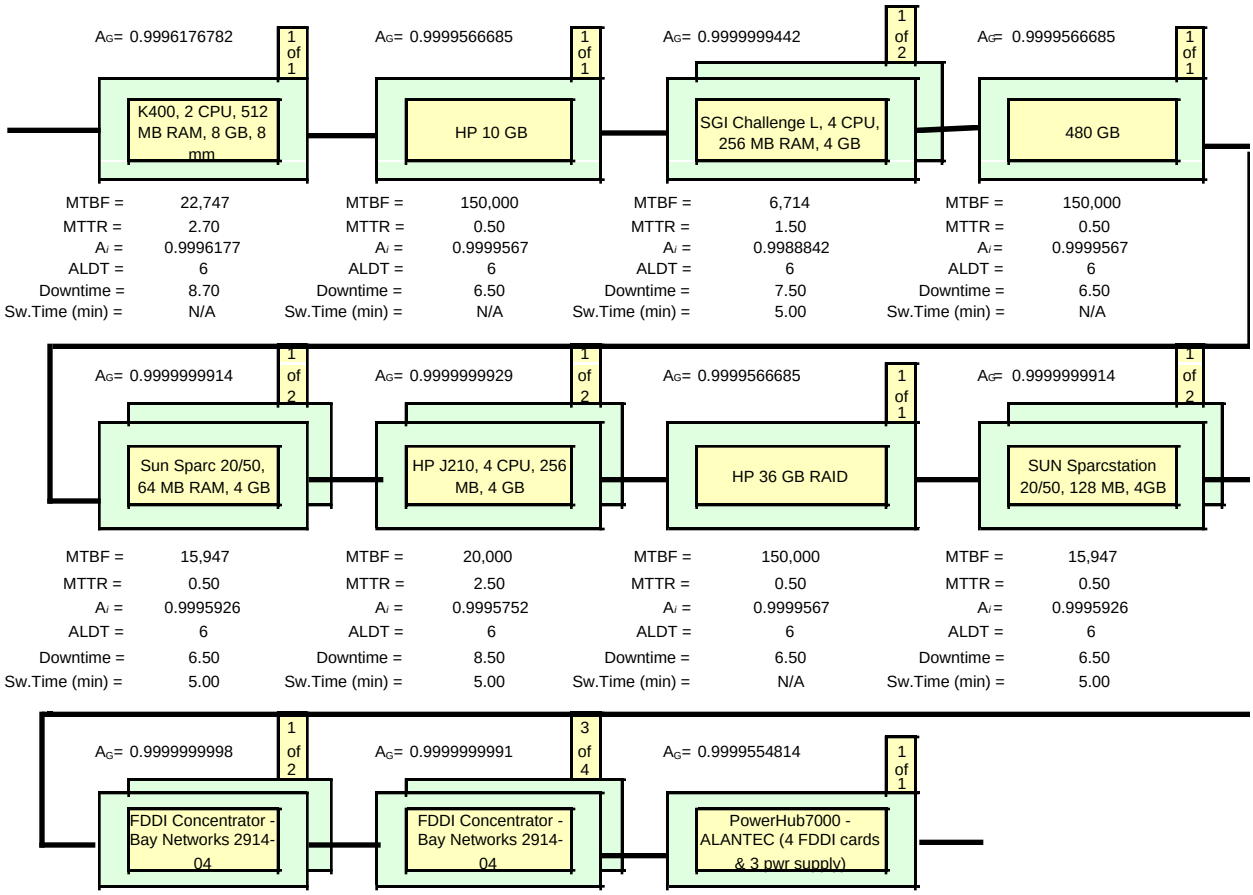
AG= 0.9996176782
1 of 1
K400, 2 CPU, 512 MB RAM, 8 GB, 8 mm
MTBF = 22,747
MTTR = 2.70
Ai = 0.9996177
ALDT = 6
Downtime = 8.70
Sw.Time (min) = N/A
AG= 0.9999566685
1 of 1
HP 10 GB
MTBF = 150,000
MTTR = 0.50
Ai = 0.9999567
ALDT = 6
Downtime = 6.50
Sw.Time (min) = N/A
AG= 0.9999999442
1 of 2
SGI Challenge L, 4 CPU, 256 MB RAM, 4 GB
MTBF = 6,714
MTTR = 1.50
Ai = 0.9988842
ALDT = 6
Downtime = 7.50
Sw.Time (min) = 5.00
AG= 0.9999566685
1 of 1
480 GB
MTBF = 150,000
MTTR = 0.50
Ai = 0.9999567
ALDT = 6
Downtime = 6.50
Sw.Time (min) = N/A
AG= 0.9999999914
1 of 2
Sun Sparc 20/50, 64 MB RAM, 4 GB
MTBF = 15,947
MTTR = 0.50
Ai = 0.9995926
ALDT = 6
Downtime = 6.50
Sw.Time (min) = 5.00
AG= 0.9999999929
1 of 2
HP J210, 4 CPU, 256 MB, 4 GB
MTBF = 20,000
MTTR = 2.50
Ai = 0.9995752
ALDT = 6
Downtime = 8.50
Sw.Time (min) = 5.00
AG= 0.9999566685
1 of 1
HP 36 GB RAID
MTBF = 150,000
MTTR = 0.50
Ai = 0.9999567
ALDT = 6
Downtime = 6.50
Sw.Time (min) = N/A
AG= 0.9999999914
1 of 2
SUN Sparcstation 20/50, 128 MB, 4GB
MTBF = 15,947
MTTR = 0.50
Ai = 0.9995926
ALDT = 6
Downtime = 6.50
Sw.Time (min) = 5.00
AG= 0.9999999998
1 of 2
FDDI Concentrator - Bay Networks 2914-04
MTBF = 100,000
MTTR = 0.50
Ai = 0.9999350
ALDT = 6
Downtime = 6.50
Sw.Time (min) = 5.00
AG= 0.9999999991
3 of 4
FDDI Concentrator - Bay Networks 2914-04
MTBF = 100,000
MTTR = 0.50
Ai = 0.9999350
ALDT = 6
Downtime = 6.50
Sw.Time (min) = 5.00
AG= 0.9999554814
1 of 1
PowerHub7000 - ALANTEC (4 FDDI cards & 3 pwr supply)
MTBF = 146,000
MTTR = 0.50
Ai = 0.9999555
ALDT = 6
Downtime = 6.50
Sw.Time (min) = N/A

EOSD 3960 Ao/MDT Analytical Results for GSFC

EOSD3960:Function Of MetaData Ingest and Update (Ao>=.96, MDT<=4.0 hrs)

Subsystem Description	Equipment Description	Model/Part Number	MTBF (hour)	MTTR (hour)	Admin. Logistic Delay Time (hour)	Switch over Time (min)	Total Downtime (hour)	Number of Units Required (m)	Total Number Of Units (n)	Redundancy	Unit Availability (Ai)	P	Redundant Group Availability (m out of n)
Data Manag.	DATA SPECIALIST W/S	SUN Sparc 20/50, 64 MB RAM, 6 GB	15,947	0.5	6	5.00	6.50	1	3	standby off-line	0.9995925659	1.0	1.000000000
Ingest	RAID	SGI 102 GB RAID	150,000	0.5	6	N/A	6.50	1	1	N/A	0.9999566685	N/A	0.999956669
Ingest	INGEST SVR/8mm Drives	SGI Challenge L, 4 CPU/3 8mm drives	6,444	1.5	6	5.00	7.50	1	2	standby off-line	0.9988374797	1.0	1.000000000
Ingest	X TERM.(Red.w/Dat Svr W/S)	X TERMINAL, NCD HMX Pro, 16 MB RAM	27,548	0.5	6	5.00	6.50	1	2	standby off-line	0.9997641039	1.0	1.000000000
Ingest	ARCHIVE ROBOTICS(1)	ARCHIVE ROBOTICS - 1 Tower, 1 Arm	28,048	1.0	6	N/A	7.00	1	1	N/A	0.9997504901	N/A	0.999750490
Ingest	LINEAR MAG DR(2)	NTP Linear Tape Drive, 3590	40,000	1.0	6	15.00	7.00	1	2	standby off-line	0.9998250306	1.0	0.999999995
ACM	APC SERVER	SGI Challenge L, 4 CPU, 256 MB RAM, 4 GB	6,714	1.5	6	5.00	7.50	1	2	standby off-line	0.9988841776	1.0	0.999999944
ACM	RAID DISK	480 GB	150,000	0.5	6	N/A	6.50	1	1	N/A	0.9999566685	N/A	0.999956669
ACM	OPS WORKSTATION	Sun Sparc 20/50, 64 MB RAM, 4 GB	15,947	0.5	6	5.00	6.50	1	2	standby off-line	0.9995925659	1.0	0.999999991
DIP	DISTRIBUTION SERVER	SUN Sparc 20/712, 256 MB RAM, 6 GB	3,752	1.0	6	5.00	7.00	1	2	standby off-line	0.9981378026	1.0	0.999999834
DIP	RAID DISK	240 GB	150,000	0.5	6	N/A	6.50	1	1	N/A	0.9999566685	N/A	0.999956669
DRP	DBMS SERVER	SGI Challenge XL, 2 CPU, 256 MB RAM, 6 GB	5,109	1.5	6	5.00	7.50	1	2	standby off-line	0.9985341542	1.0	0.999999904
DRP	RAID DISK	27 GB	150,000	0.5	6	N/A	6.50	1	1	N/A	0.9999566685	N/A	0.999956669
MSS/CSS	MSS/CSS SERVER	HP J210, 4 CPU, 256 MB, 4 GB	20000	2.5	6	5.00	8.50	1	2	standby off-line	0.9995751805	1.0	0.999999993
MSS	RAID	HP 36 GB RAID	150,000	0.5	6	N/A	6.50	1	1	N/A	0.9999566685	N/A	0.999956669
MSS	MSS WS	SUN Sparcstation 20/50, 128 MB, 4GB	15,947	0.5	6	5.00	6.50	1	2	standby off-line	0.9995925659	1.0	0.999999991
ISS	FDDI CONCENTRATOR	FDDI Concentrator - Bay Networks 2914-04	100,000	0.5	6	5.00	6.50	1	2	standby off-line	0.9999350042	1.0	1.000000000
ISS	FDDI CONCENTRATOR	FDDI Concentrator - Bay Networks 2914-04	100,000	0.5	6	5.00	6.50	1	2	standby off-line	0.9999350042	1.0	1.000000000
ISS	FDDI CONCENTRATOR	FDDI Concentrator - Bay Networks 2914-04	100,000	0.5	6	5.00	6.50	3	4	standby off-line	0.9999350042	1.0	0.999999999
ISS	FDDI SWITCH	PowerHub7000 - ALANTEC (4 FDDI cards & 3 pwr supply)	146,000	0.5	6	N/A	6.50	1	1	N/A	0.9999554814	N/A	0.999955481
													0.9997818304
		EOSD3960 Ao =	0.99978										
		EOSD3960 MDT =	0.33631										

Note: (1) Robot Failure Rate is 25% Duty cycle
(2) Tape Drive Failure Rate is 25% Duty cycle

EOSD 3960 Ao/MDT Analytical Results for GSFC (continued)

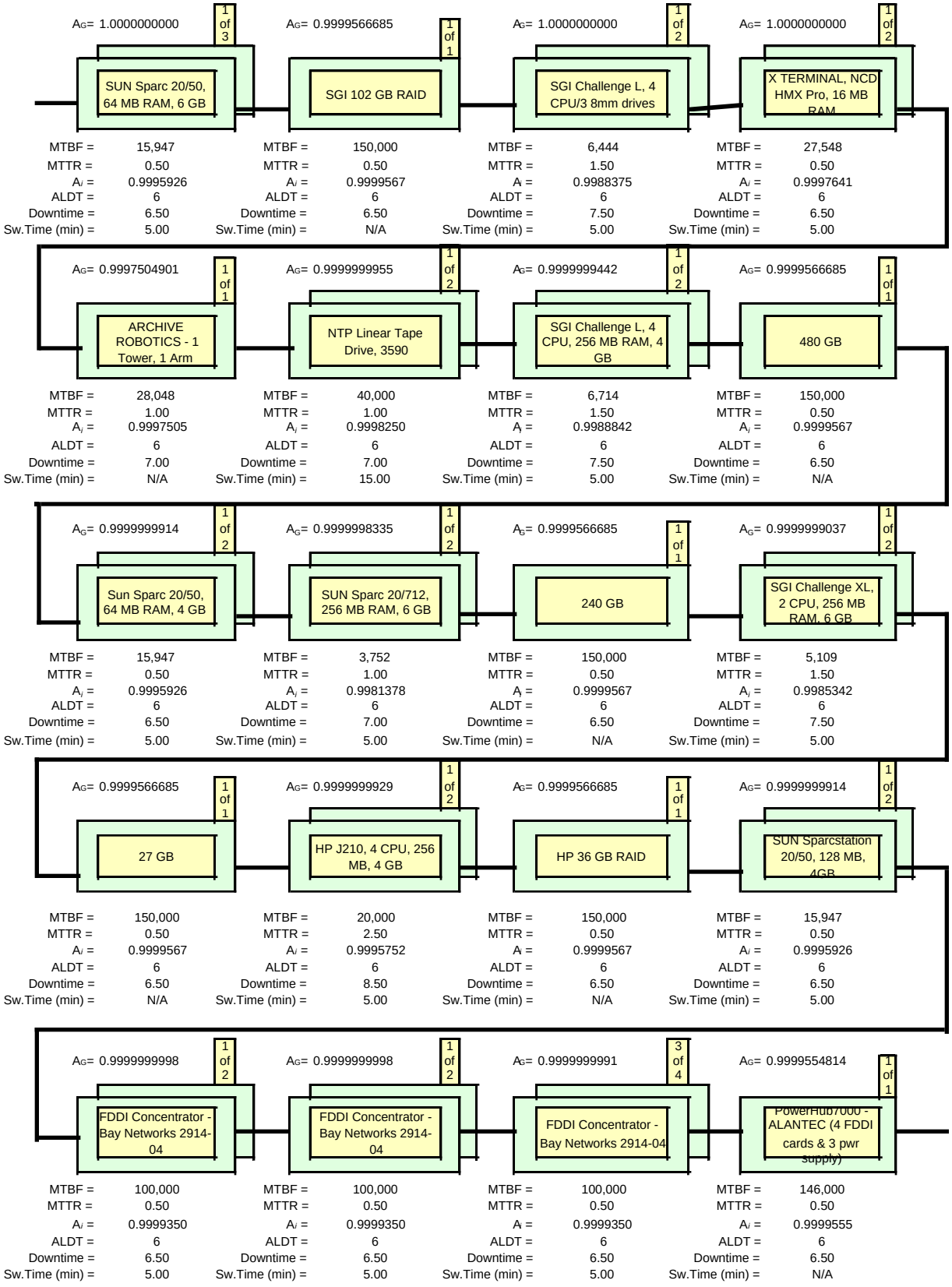

EOSD 3970 Ao/MDT Analytical Results for GSFC

EOSD3970: Function Of Info. Searches On Local Holdings (Ao>=.96, MDT<=4.0 hrs)

Subsystem Description	Equipment Description	Model/Part Number	MTBF (hour)	MTTR (hour)	Admin. Logistic Delay Time (hour)	Switch over Time (min)	Total Downtime (hour)	Number of Units Required (m)	Total Number Of Units (n)	Redundancy	Unit Availability (Ai)	P	Redundant Group Availability (m out of n)
ACM	APC SERVER	SGI Challenge L, 4 CPU, 256 MB RAM, 4 GB	6,714	1.5	6	5.00	7.50	1	2	standby off-line	0.9988841776	1.0	0.999999944
ACM	RAID DISK	480 GB	150,000	0.5	6	N/A	6.50	1	1	N/A	0.9999566685	N/A	0.999956669
ACM	OPS WORKSTATION	Sun Sparc 20/50, 64 MB RAM, 4 GB	15,947	0.5	6	5.00	6.50	1	2	standby off-line	0.9995925659	1.0	0.999999991
DRP	DBMS SERVER	SGI Challenge XL, 2 CPU, 256 MB RAM, 6 GB	5,109	1.5	6	5.00	7.50	1	2	standby off-line	0.9985341542	1.0	0.999999904
DRP	RAID DISK	27 GB	150,000	0.5	6	N/A	6.50	1	1	N/A	0.9999566685	N/A	0.999956669
MSS/CSS	MSS/CSS SERVER	HP J210, 4 CPU, 256 MB, 4 GB	20000	2.5	6	5.00	8.50	1	2	standby off-line	0.9995751805	1.0	0.999999993
MSS	RAID	HP 36 GB RAID	150,000	0.5	6	N/A	6.50	1	1	N/A	0.9999566685	N/A	0.999956669
MSS	MSS WS	SUN Sparcstation 20/50, 128 MB, 4GB	15,947	0.5	6	5.00	6.50	1	2	standby off-line	0.9995925659	1.0	0.999999991
ISS	FDDI CONCENTRATOR	FDDI Concentrator - Bay Networks 2914-04	100,000	0.5	6	5.00	6.50	1	2	standby off-line	0.9999350042	1.0	1.000000000
ISS	FDDI CONCENTRATOR	FDDI Concentrator - Bay Networks 2914-04	100,000	0.5	6	5.00	6.50	2	3	standby off-line	0.9999350042	1.0	1.000000000
ISS	FDDI SWITCH	PowerHub7000 - ALANTEC (4 FDDI cards & 3 pwr supply)	146,000	0.5	6	N/A	6.50	1	1	N/A	0.9999554814	N/A	0.999955481
													0.9998253213
		EOSD3970 Ao =	0.99983										
		EOSD3970 MDT =	0.38722										

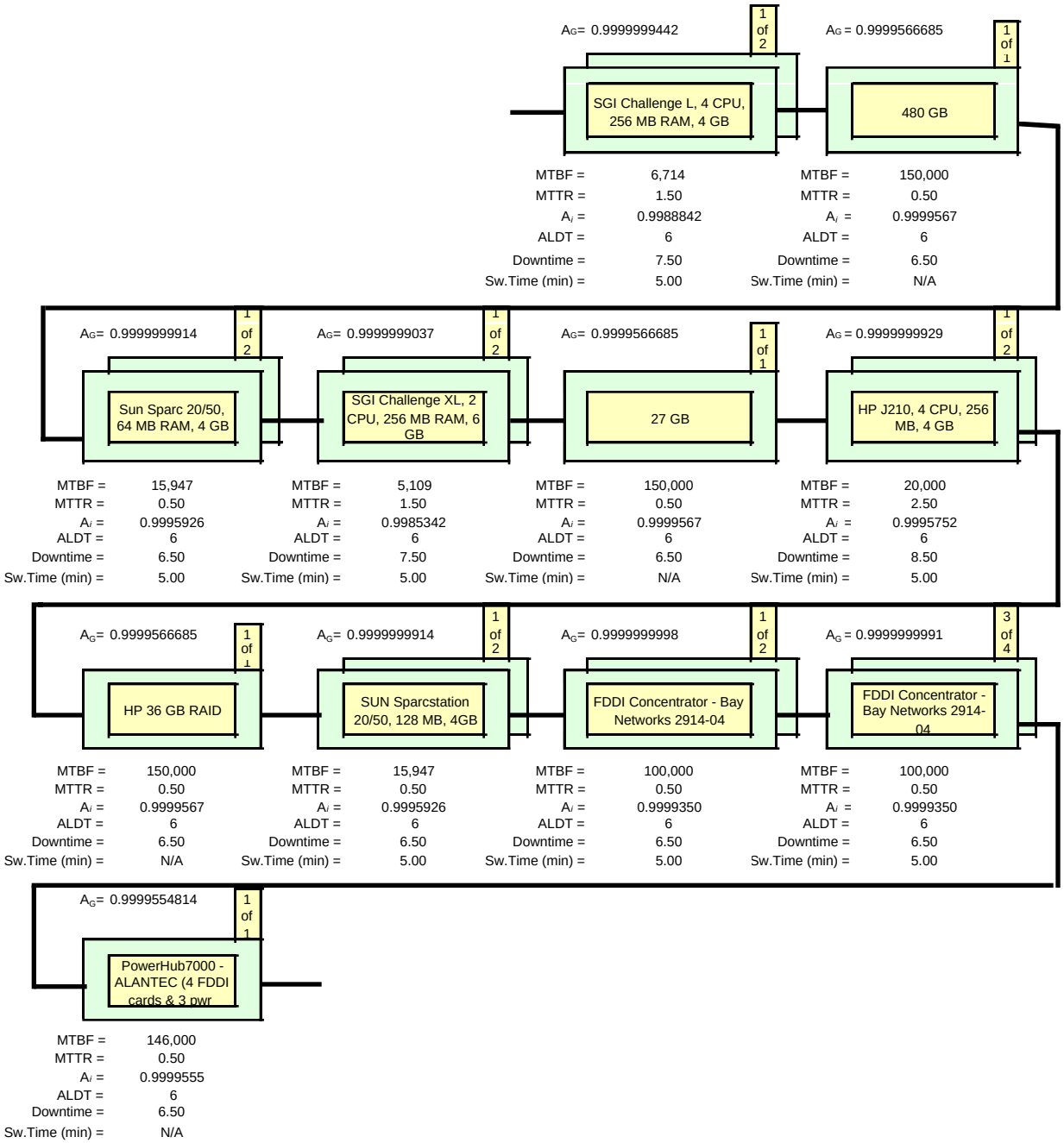
AG= 0.9999999442
1 of 2
SGI Challenge L, 4 CPU, 256 MB RAM, 4 GB
MTBF = 6,714
MTTR = 1.50
Ai = 0.9988842
ALDT = 6
Downtime = 7.50
Sw.Time (min) = 5.00
AG = 0.9999566685
1 of 1
480 GB
MTBF = 150,000
MTTR = 0.50
Ai = 0.9999567
ALDT = 6
Downtime = 6.50
Sw.Time (min) = N/A
AG= 0.9999999914
1 of 2
Sun Sparc 20/50, 64 MB RAM, 4 GB
MTBF = 15,947
MTTR = 0.50
Ai = 0.9995926
ALDT = 6
Downtime = 6.50
Sw.Time (min) = 5.00
AG= 0.9999999037
1 of 2
SGI Challenge XL, 2 CPU, 256 MB RAM, 6 GB
MTBF = 5,109
MTTR = 1.50
Ai = 0.9985342
ALDT = 6
Downtime = 7.50
Sw.Time (min) = 5.00
AG= 0.9999566685
1 of 1
27 GB
MTBF = 150,000
MTTR = 0.50
Ai = 0.9999567
ALDT = 6
Downtime = 6.50
Sw.Time (min) = N/A
AG = 0.9999999929
1 of 2
HP J210, 4 CPU, 256 MB, 4 GB
MTBF = 20,000
MTTR = 2.50
Ai = 0.9995752
ALDT = 6
Downtime = 8.50
Sw.Time (min) = 5.00
AG= 0.9999566685
1 of 1
HP 36 GB RAID
MTBF = 150,000
MTTR = 0.50
Ai = 0.9999567
ALDT = 6
Downtime = 6.50
Sw.Time (min) = N/A
AG= 0.9999999914
1 of 2
SUN Sparcstation 20/50, 128 MB, 4GB
MTBF = 15,947
MTTR = 0.50
Ai = 0.9995926
ALDT = 6
Downtime = 6.50
Sw.Time (min) = 5.00
AG= 0.9999999998
1 of 2
FDDI Concentrator - Bay Networks 2914-04
MTBF = 100,000
MTTR = 0.50
Ai = 0.9999350
ALDT = 6
Downtime = 6.50
Sw.Time (min) = 5.00
AG = 0.9999999991
3 of 4
FDDI Concentrator - Bay Networks 2914-04
MTBF = 100,000
MTTR = 0.50
Ai = 0.9999350
ALDT = 6
Downtime = 6.50
Sw.Time (min) = 5.00
AG= 0.9999554814
1 of 1
PowerHub7000 - ALANTEC (4 FDDI cards & 3 pwr
MTBF = 146,000
MTTR = 0.50
Ai = 0.9999555
ALDT = 6
Downtime = 6.50
Sw.Time (min) = N/A

EOSD 3980 Ao/MDT Analytical Results for GSFC

EOSD3980: Function Of Local Data Order Submission (Ao>=.96, MDT<=4.0 hrs)

Subsystem Description	Equipment Description	Model/Part Number	MTBF (hour)	MTTR (hour)	Admin. Logistic Delay Time (hour)	Switchover Time (min)	Total Downtime (hour)	Number of Units Required (m)	Total Number Of Units (n)	Redundancy	Unit Availability (Ai)	P	Redundant Group Availability (m out of n)
Data Manag.	DATA SPECIALIST W/S	SUN Sparc 20/50, 64 MB RAM, 6 GB	15,947	0.5	6	5.00	6.50	1	3	standby off-line	0.9995925659	1.0	1.000000000
ACM	APC SERVER	SGI Challenge L, 4 CPU, 256 MB RAM, 4 GB	6,714	1.5	6	5.00	7.50	1	2	standby off-line	0.9988841776	1.0	0.999999944
ACM	RAID DISK	480 GB	150,000	0.5	6	N/A	6.50	1	1	N/A	0.9999566685	N/A	0.999956669
ACM	OPS WORKSTATION	Sun Sparc 20/50, 64 MB RAM, 4 GB	15,947	0.5	6	5.00	6.50	1	2	standby off-line	0.9995925659	1.0	0.999999991
MSS/CSS	MSS/CSS SERVER	HP J210, 4 CPU, 256 MB, 4 GB	20000	2.5	6	5.00	8.50	1	2	standby off-line	0.9995751805	1.0	0.999999993
MSS	RAID	HP 36 GB RAID	150,000	0.5	6	N/A	6.50	1	1	N/A	0.9999566685	N/A	0.999956669
MSS	MSS WS	SUN Sparcstation 20/50, 128 MB, 4GB	15,947	0.5	6	5.00	6.50	1	2	standby off-line	0.9995925659	1.0	0.999999991
ISS	FDDI CONCENTRATOR	FDDI Concentrator - Bay Networks 2914-04	100,000	0.5	6	5.00	6.50	1	2	standby off-line	0.9999350042	1.0	1.000000000
ISS	FDDI CONCENTRATOR	FDDI Concentrator - Bay Networks 2914-04	100,000	0.5	6	5.00	6.50	2	3	standby off-line	0.9999350042	1.0	1.000000000
ISS	FDDI SWITCH	PowerHub7000 - ALANTEC (4 FDDI cards & 3 pwr supply)	146,000	0.5	6	N/A	6.50	1	1	N/A	0.9999554814	N/A	0.999955481
													0.9998687434
		EOSD3980 Ao =	0.99987										
		EOSD3980 MDT =	0.43859										

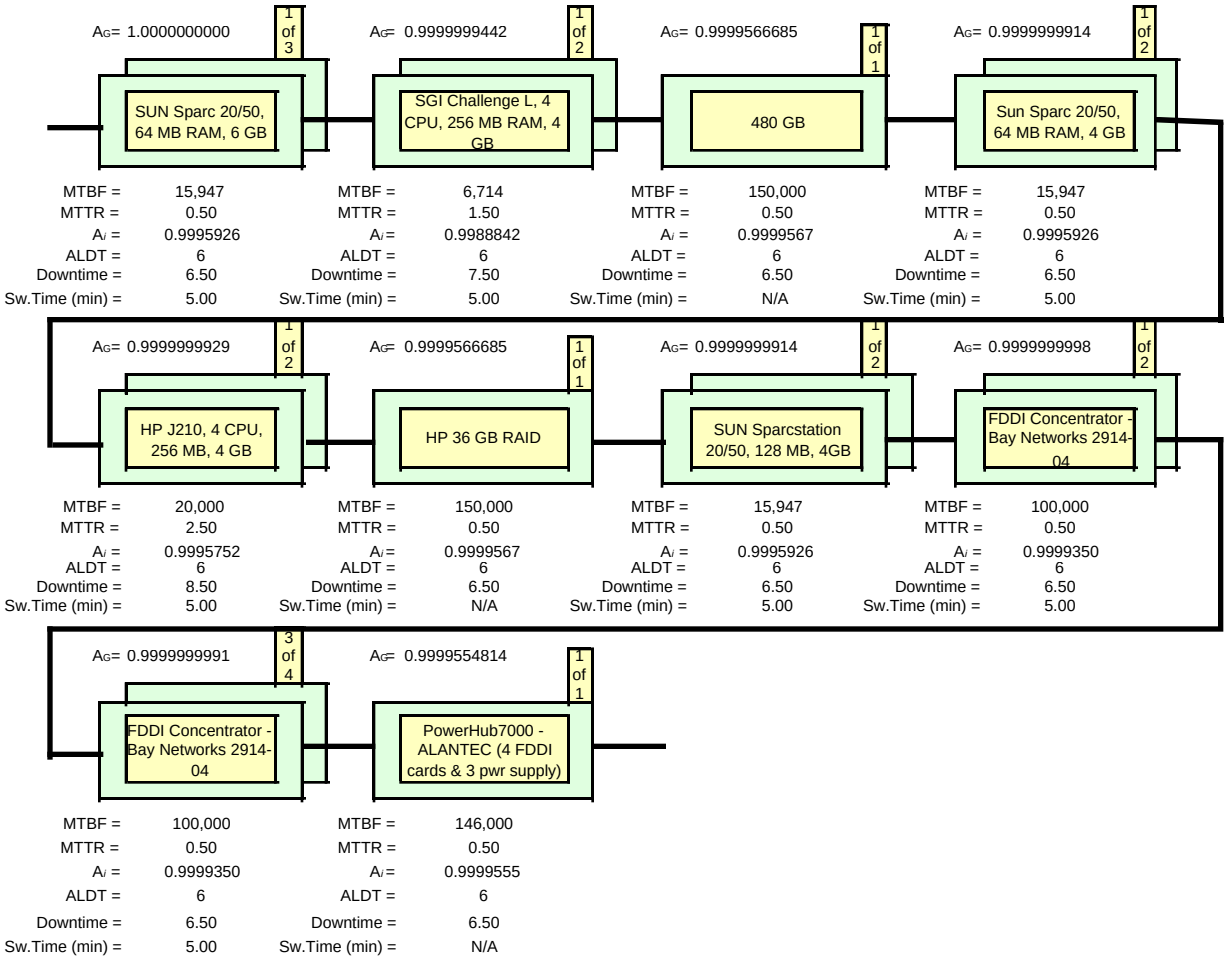
AG= 1.0000000000
1 of 3
SUN Sparc 20/50, 64 MB RAM, 6 GB
MTBF = 15,947
MTTR = 0.50
Ai = 0.9995926
ALDT = 6
Downtime = 6.50
Sw.Time (min) = 5.00
AG= 0.9999999442
1 of 2
SGI Challenge L, 4 CPU, 256 MB RAM, 4 GB
MTBF = 6,714
MTTR = 1.50
Ai = 0.9988842
ALDT = 6
Downtime = 7.50
Sw.Time (min) = 5.00
AG= 0.9999566685
1 of 1
480 GB
MTBF = 150,000
MTTR = 0.50
Ai = 0.9999567
ALDT = 6
Downtime = 6.50
Sw.Time (min) = N/A
AG= 0.9999999914
1 of 2
Sun Sparc 20/50, 64 MB RAM, 4 GB
MTBF = 15,947
MTTR = 0.50
Ai = 0.9995926
ALDT = 6
Downtime = 6.50
Sw.Time (min) = 5.00
AG= 0.9999999929
1 of 2
HP J210, 4 CPU, 256 MB, 4 GB
MTBF = 20,000
MTTR = 2.50
Ai = 0.9995752
ALDT = 6
Downtime = 8.50
Sw.Time (min) = 5.00
AG= 0.9999566685
1 of 1
HP 36 GB RAID
MTBF = 150,000
MTTR = 0.50
Ai = 0.9999567
ALDT = 6
Downtime = 6.50
Sw.Time (min) = N/A
AG= 0.9999999914
1 of 2
SUN Sparcstation 20/50, 128 MB, 4GB
MTBF = 15,947
MTTR = 0.50
Ai = 0.9995926
ALDT = 6
Downtime = 6.50
Sw.Time (min) = 5.00
AG= 0.9999999998
1 of 2
FDDI Concentrator - Bay Networks 2914-04
MTBF = 100,000
MTTR = 0.50
Ai = 0.9999350
ALDT = 6
Downtime = 6.50
Sw.Time (min) = 5.00
AG= 0.9999999991
3 of 4
FDDI Concentrator - Bay Networks 2914-04
MTBF = 100,000
MTTR = 0.50
Ai = 0.9999350
ALDT = 6
Downtime = 6.50
Sw.Time (min) = 5.00
AG= 0.9999554814
1 of 1
PowerHub7000 - ALANTEC (4 FDDI cards & 3 pwr supply)
MTBF = 146,000
MTTR = 0.50
Ai = 0.9999555
ALDT = 6
Downtime = 6.50
Sw.Time (min) = N/A

EOSD 3990 Ao/MDT Analytical Results for GSFC

EOSD3990: Function Of Data Order Submission Across DAACs (Ao<=.96, MDT>=4.0 hrs)

Subsystem Description	Equipment Description	Model/Part Number	MTBF (hour)	MTTR (hour)	Admin. Logistic Delay Time (hour)	Switchover Time (min)	Total Downtime (hour)	Number of Units Required (m)	Total Number Of Units (n)	Redundancy	Unit Availability (Ai)	P	Redundant Group Availability (m out of n)
Data Manag.	DMG SERVER	K400, 2 CPU, 512 MB RAM, 8 GB, 8 mm	22,747	2.7	6	N/A	8.70	1	1	N/A	0.9996176782	N/A	0.999617678
Data Manag.	RAID DISK	HP 10 GB	150,000	0.5	6	N/A	6.50	1	1	N/A	0.9999566685	N/A	0.999956669
Data Manag.	DATA SPECIALIST W/S	SUN Sparc 20/50, 64 MB RAM, 6 GB	15,947	0.5	6	5.00	6.50	1	3	standby off-line	0.9995925659	1.0	1.000000000
ACM	APC SERVER	SGI Challenge L, 4 CPU, 256 MB RAM, 4 GB	6,714	1.5	6	5.00	7.50	1	2	standby off-line	0.9988841776	1.0	0.999999944
ACM	RAID DISK	480 GB	150,000	0.5	6	N/A	6.50	1	1	N/A	0.9999566685	N/A	0.999956669
ACM	OPS WORKSTATION	Sun Sparc 20/50, 64 MB RAM, 4 GB	15,947	0.5	6	5.00	6.50	1	2	standby off-line	0.9995925659	1.0	0.999999991
MSS/CSS	MSS/CSS SERVER	HP J210, 4 CPU, 256 MB, 4 GB	20000	2.5	6	5.00	8.50	1	2	standby off-line	0.9995751805	1.0	0.999999993
MSS	RAID	HP 36 GB RAID	150,000	0.5	6	N/A	6.50	1	1	N/A	0.9999566685	N/A	0.999956669
MSS	MSS WS	SUN Sparcstation 20/50, 128 MB, 4GB	15,947	0.5	6	5.00	6.50	1	2	standby off-line	0.9995925659	1.0	0.999999991
ISS	FDDI CONCENTRATOR	FDDI Concentrator - Bay Networks 2914-04	100,000	0.5	6	5.00	6.50	1	2	standby off-line	0.9999350042	1.0	1.000000000
ISS	FDDI CONCENTRATOR	FDDI Concentrator - Bay Networks 2914-04	100,000	0.5	6	5.00	6.50	2	3	standby off-line	0.9999350042	1.0	1.000000000
ISS	FDDI SWITCH	PowerHub7000 - ALANTEC (4 FDDI cards & 3 pwr supply)	146,000	0.5	6	N/A	6.50	1	1	N/A	0.9999554814	N/A	0.999955481
													0.9998687434

EOSD3990 Ao =	0.99987
EOSD3990 MDT =	0.43859

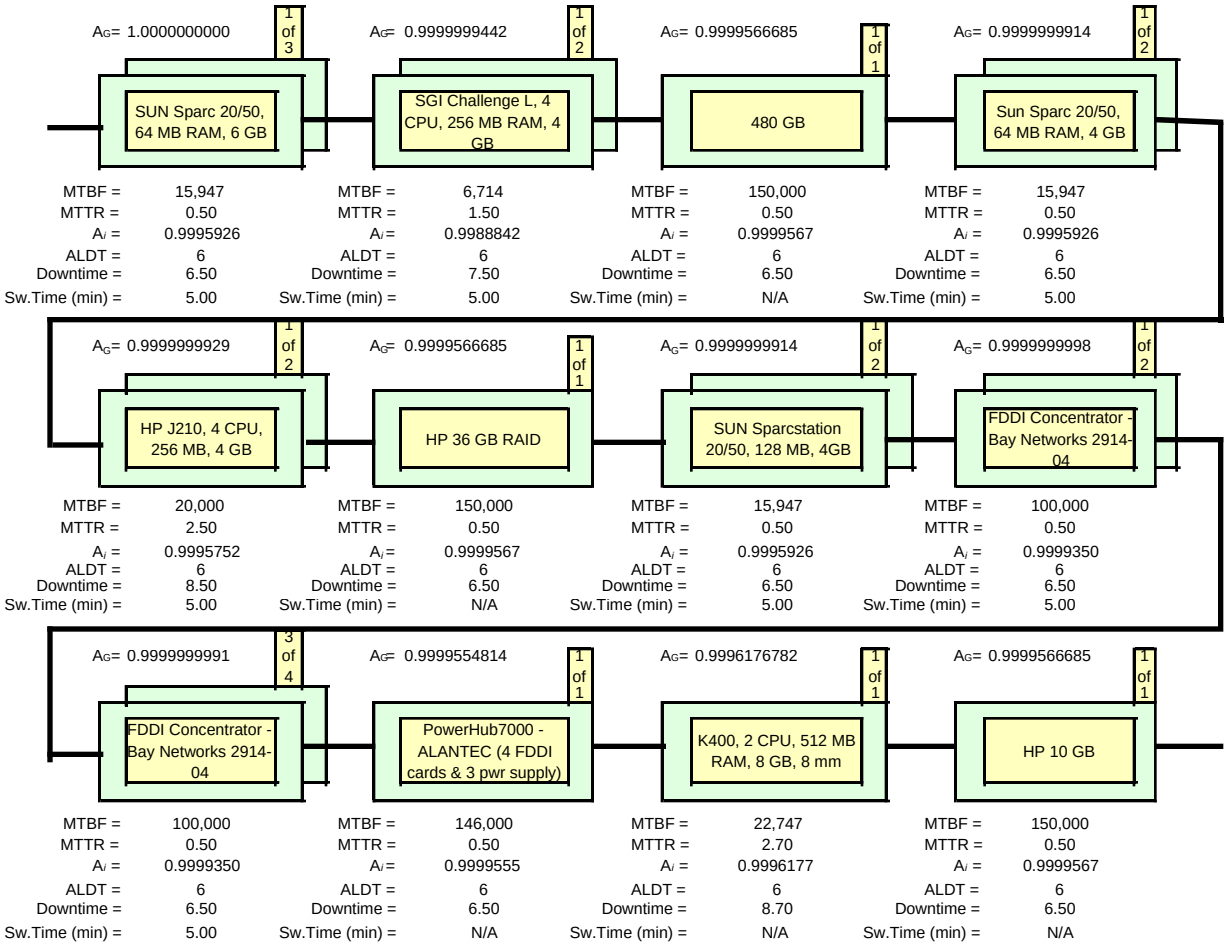
AG= 1.0000000000
1 of 3
SUN Sparc 20/50, 64 MB RAM, 6 GB
MTBF = 15,947
MTTR = 0.50
Ai = 0.9995926
ALDT = 6
Downtime = 6.50
Sw.Time (min) = 5.00
AG= 0.9999999442
1 of 2
SGI Challenge L, 4 CPU, 256 MB RAM, 4 GB
MTBF = 6,714
MTTR = 1.50
Ai = 0.9988842
ALDT = 6
Downtime = 7.50
Sw.Time (min) = 5.00
AG= 0.9999566685
1 of 1
480 GB
MTBF = 150,000
MTTR = 0.50
Ai = 0.9999567
ALDT = 6
Downtime = 6.50
Sw.Time (min) = N/A
AG= 0.9999999914
1 of 2
Sun Sparc 20/50, 64 MB RAM, 4 GB
MTBF = 15,947
MTTR = 0.50
Ai = 0.9995926
ALDT = 6
Downtime = 6.50
Sw.Time (min) = 5.00
AG= 0.9999999929
1 of 2
HP J210, 4 CPU, 256 MB, 4 GB
MTBF = 20,000
MTTR = 2.50
Ai = 0.9995752
ALDT = 6
Downtime = 8.50
Sw.Time (min) = 5.00
AG= 0.9999566685
1 of 1
HP 36 GB RAID
MTBF = 150,000
MTTR = 0.50
Ai = 0.9999567
ALDT = 6
Downtime = 6.50
Sw.Time (min) = N/A
AG= 0.9999999914
1 of 2
SUN Sparcstation 20/50, 128 MB, 4GB
MTBF = 15,947
MTTR = 0.50
Ai = 0.9995926
ALDT = 6
Downtime = 6.50
Sw.Time (min) = 5.00
AG= 0.9999999998
1 of 2
FDDI Concentrator - Bay Networks 2914-04
MTBF = 100,000
MTTR = 0.50
Ai = 0.9999350
ALDT = 6
Downtime = 6.50
Sw.Time (min) = 5.00
AG= 0.9999999991
3 of 4
FDDI Concentrator - Bay Networks 2914-04
MTBF = 100,000
MTTR = 0.50
Ai = 0.9999350
ALDT = 6
Downtime = 6.50
Sw.Time (min) = 5.00
AG= 0.9999554814
1 of 1
PowerHub7000 - ALANTEC (4 FDDI cards & 3 pwr supply)
MTBF = 146,000
MTTR = 0.50
Ai = 0.9999555
ALDT = 6
Downtime = 6.50
Sw.Time (min) = N/A
AG= 0.9996176782
1 of 1
K400, 2 CPU, 512 MB RAM, 8 GB, 8 mm
MTBF = 22,747
MTTR = 2.70
Ai = 0.9996177
ALDT = 6
Downtime = 8.70
Sw.Time (min) = N/A
AG= 0.9999566685
1 of 1
HP 10 GB
MTBF = 150,000
MTTR = 0.50
Ai = 0.9999567
ALDT = 6
Downtime = 6.50
Sw.Time (min) = N/A

EOSD 4000 Ao/MDT Analytical Results for GSFC

EOSD4000: Function Of IMS Data Management and Maintenance Interface (Ao>=.96, MDT<=4.0 hrs)

Subsystem Description	Equipment Description	Model/Part Number	MTBF (hour)	MTTR (hour)	Admin. Logistic Delay Time (hour)	Switchover Time (min)	Total Downtime (hour)	Number of Units Required (m)	Total Number Of Units (n)	Redundancy	Unit Availability (Ai)	P	Redundant Group Availability (m out of n)
Data Manag.	DMG SERVER	K400, 2 CPU, 512 MB RAM, 8 GB, 8 mm	22,747	2.7	6	N/A	8.70	1	1	N/A	0.9996176782	N/A	0.999617678
Data Manag.	RAID DISK	HP 10 GB	150,000	0.5	6	N/A	6.50	1	1	N/A	0.9999566685	N/A	0.999956669
Data Manag.	DATA SPECIALIST W/S	SUN Sparc 20/50, 64 MB RAM, 6 GB	15,947	0.5	6	5.00	6.50	1	3	standby off-line	0.9995925659	1.0	1.000000000
ACM	OPS WORKSTATION	Sun Sparc 20/50, 64 MB RAM, 4 GB	15,947	0.5	6	5.00	6.50	1	2	standby off-line	0.9995925659	1.0	0.999999991
DRP	DBMS SERVER	SGI Challenge XL, 2 CPU, 256 MB RAM, 6 GB	5,109	1.5	6	5.00	7.50	1	2	standby off-line	0.9985341542	1.0	0.999999904
DRP	RAID DISK	27 GB	150,000	0.5	6	N/A	6.50	1	1	N/A	0.9999566685	N/A	0.999956669
MSS/CSS	MSS/CSS SERVER	HP J210, 4 CPU, 256 MB, 4 GB	20000	2.5	6	5.00	8.50	1	2	standby off-line	0.9995751805	1.0	0.999999993
MSS	RAID	HP 36 GB RAID	150,000	0.5	6	N/A	6.50	1	1	N/A	0.9999566685	N/A	0.999956669
MSS	MSS WS	SUN Sparcstation 20/50, 128 MB, 4GB	15,947	0.5	6	5.00	6.50	1	2	standby off-line	0.9995925659	1.0	0.999999991
ISS	FDDI CONCENTRATOR	FDDI Concentrator - Bay Networks 2914-04	100,000	0.5	6	5.00	6.50	1	2	standby off-line	0.9999350042	1.0	1.000000000
ISS	FDDI CONCENTRATOR	FDDI Concentrator - Bay Networks 2914-04	100,000	0.5	6	5.00	6.50	2	3	standby off-line	0.9999350042	1.0	1.000000000
ISS	FDDI SWITCH	PowerHub7000 - ALANTEC (4 FDDI cards & 3 pwr supply)	146,000	0.5	6	N/A	6.50	1	1	N/A	0.9999554814	N/A	0.999955481
													0.9998687115

EOSD4000 Ao =	0.99987
EOSD4000 MDT =	0.45481

EOSD 4000 Ao/MDT Analytical Results for GSFC

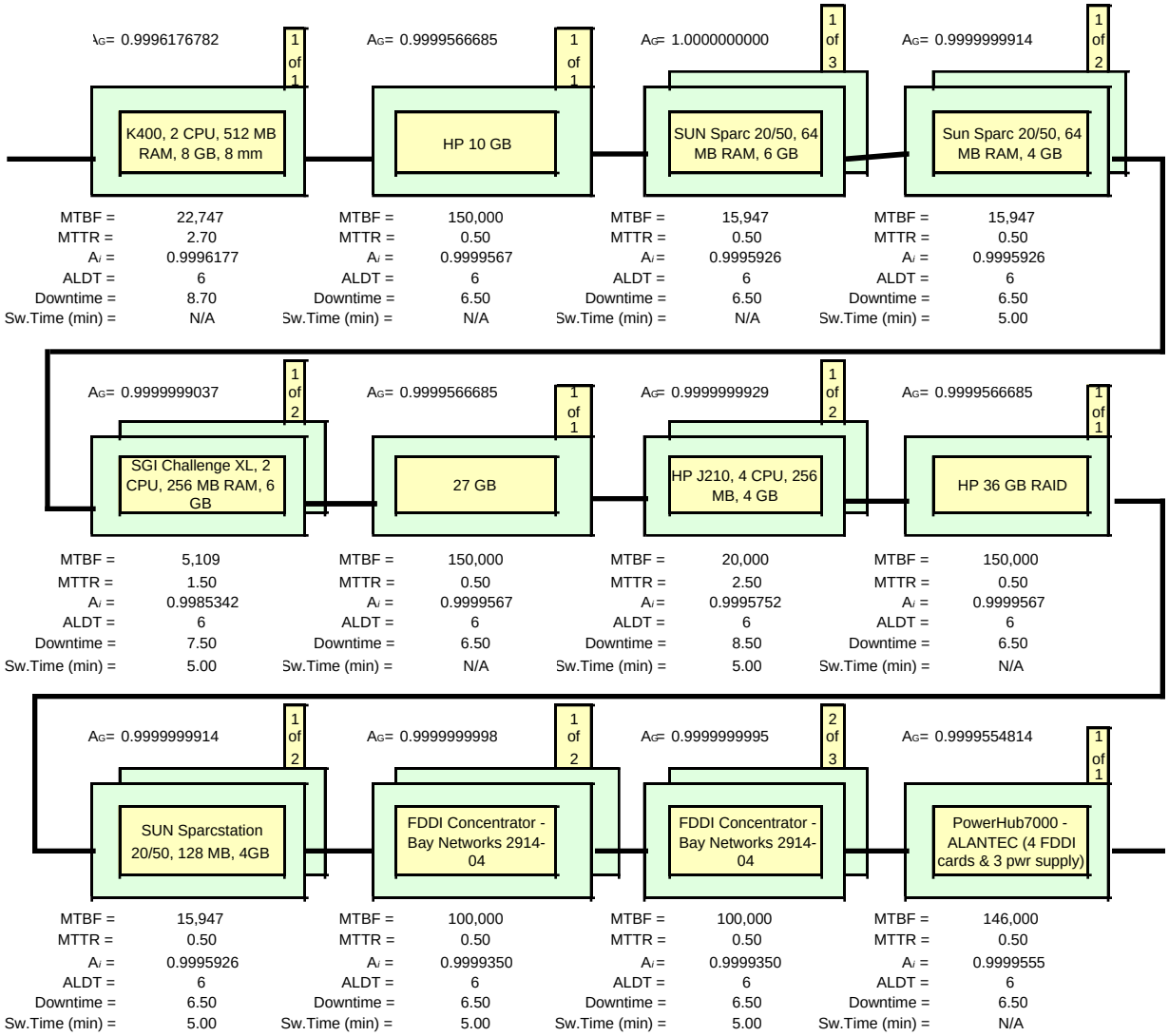

EOSD 4030 Ao/MDT Analytical Results for GSFC

EOSD4030: Function Of Gathering and Disseminating System Management Information (Ao>=.98, MDT<=20 min.)

Subsystem Description	Equipment Description	Model/Part Number	MTBF (hour)	MTTR (hour)	Admin. Logistic Delay Time (hour)	Switch over Time (min)	Total Downtime (hour)	Number of Units Required (m)	Total Number Of Units (n)	Redundancy	Unit Availability (Ai)	P	Redundant Group Availability (m out of n)
MSS/CSS	MSS/CSS SERVER	HP J210, 4 CPU, 256 MB, 4 GB	20000	2.5	6	5.00	8.50	1	2	standby off-line	0.9995751805	1.0	0.999999993
MSS	RAID	HP 36 GB RAID	150,000	0.5	6	5.00	6.50	1	1	N/A	0.9999566685	N/A	0.999956669
MSS	MSS WS	SUN Sparcstation 20/50, 128 MB, 4GB	15,947	0.5	6	5.00	6.50	1	2	standby off-line	0.9995925659	1.0	0.999999991
ISS	FDDI CONCENTRATOR	FDDI Concentrator - Bay Networks 2914-04	100,000	0.5	6	5.00	6.50	1	2	standby off-line	0.9999350042	1.0	1.000000000
ISS	FDDI CONCENTRATOR	FDDI Concentrator - Bay Networks 2914-04	100,000	0.5	6	5.00	6.50	2	3	standby off-line	0.9999350042	1.0	1.000000000
ISS	FDDI SWITCH	PowerHub7000 - ALANTEC (4 FDDI cards & 3 pwr supply)	146,000	0.5	6	5.00	6.50	1	1	N/A	0.9999554814	N/A	0.999955481
													0.9999121354
		EOSD4030 Ao =	0.99991										
		EOSD4030 MDT =	0.08333										

EOSD 4030 Ao/MDT Analytical Results for GSFC

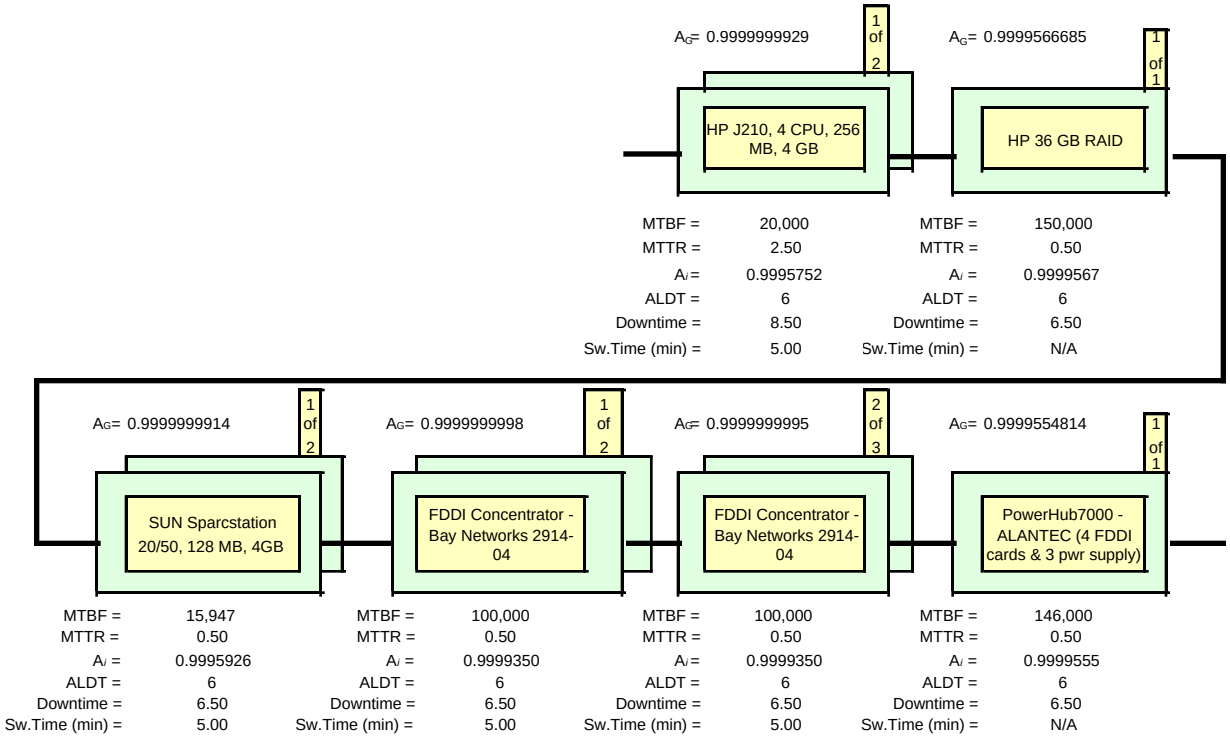

EOSD3700 Ao/MDT Analytical Results for JPL

Subsystem Description	Equipment Description	Model/Part Number	MTBF (hour)	MTTR (hour)	Admin. Logistic Delay Time (hour)	Switchover Time (min)	Total Downtime (hour)	Number of Units Required (m)	Total Number Of Units (n)	Redundancy	Unit Availability (Ai)	P	Redundant Group Availability (m out of n)
Science Proc,	SCIENCE PROCESSOR	SGI Challenge L, 4 CPU, 512 MB RAM, 10 GB	6,714	1.5	6	60.00	7.50	1	1	N/A	0.9988841776	N/A	0.998884178
Science Proc,	TAPE STACKER	3, 8mm Drives w/stacker - Exabyte	160,000	0.5	6	N/A	6.50	2	2	N/A	0.9999593767	N/A	0.999918757
Science Proc,	RAID	17GB	150,000	0.3	6	N/A	6.25	1	1	N/A	0.9999583351	N/A	0.999958335
Science Proc,	X TERMINAL	X TERMINAL, NCD HMX Pro, 16 MB RAM	27,548	0.5	6	5.00	6.50	5	6	standby off-line	0.9997641039	1.0	0.999999974
Science Proc,	AIT&AQA SERVER	SGI Indigo2	4,684	1.0	6	N/A	7.00	1	1	N/A	0.9985077809	N/A	0.998507781
Science Proc,	AIT W/S DBMS SERVER	SUN Ultra 140	8,324	1.0	6	N/A	7.00	1	1	N/A	0.9991597647	N/A	0.999159765
Science Proc,	QUEUING SVR/RAID	SUN Sparc 20/712/ 12 GB RAID	3,660	1.0	6	5.00	7.00	1	2	standby off-line	0.9980910826	1.0	0.999999825
Planning	PLN DBMS	SUN Sparc 20/712/ 12 GB RAID	3,660	1.0	6	5.00	7.00	1	2	off-line	0.9980910826	1.0	0.999999825
													0.9964327222

EOSD3700 Ao = 0.99643
EOSD3700 MDT = 2.4254

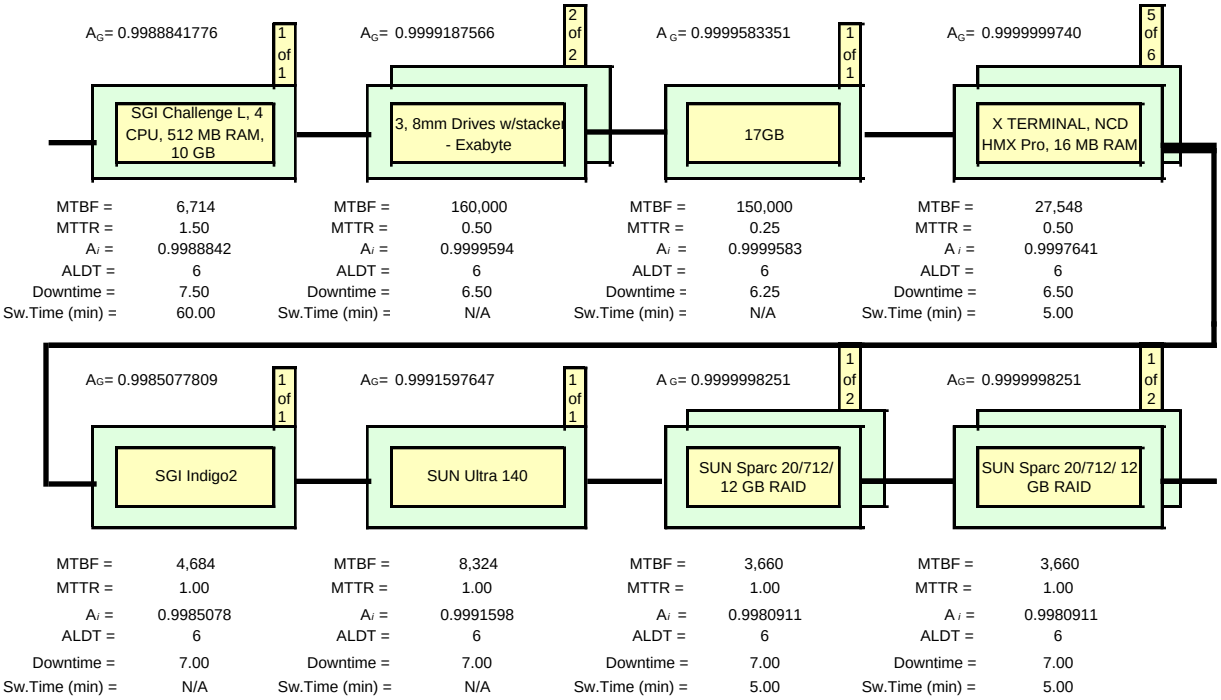

EOSD3900 Ao/MDT Analytical Results for JPL

EOSD3900: Function of Receiving Science Data (Ao>=.9990, MDT<=2.0 hrs)

Subsystem Description	Equipment Description	Model/Part Number	MTBF (hour)	MTTR (hour)	Admin. Logistic Delay Time (hour)	Switchover Time (min)	Total Downtime (hour)	Number of Units Required (m)	Total Number Of Units (n)	Redundancy	Unit Availability (Ai)	P	Redundant Group Availability (m out of n)
Ingest	RAID	SGI 102 GB RAID	150,000	0.5	6	N/A	6.50	1	1	N/A	0.9999566685	N/A	0.999956669
Ingest	INGEST SVR/8mm Drives	SGI Challenge L, 4 CPU/3 8mm drives	6,444	1.5	6	5.00	7.50	1	2	standby off-line	0.9988374797	1.0	1.000000000
Ingest	X TERM.(Red.w/ DatSvr W/S)	X TERMINAL, NCD HMX Pro, 16 MB RAM	27,548	0.5	6	5.00	6.50	1	2	standby off-line	0.9997641039	1.0	1.000000000
Ingest	ARCHIVE ROBOTICS(1)	ARCHIVE ROBOTICS - 1 Tower, 1 Arm	28,048	1.0	6	N/A	7.00	1	1	N/A	0.9997504901	N/A	0.999750490
Ingest	LINEAR MAG DR(2)	NTP Linear Tape Drive, 3590	40,000	1.0	6	15.00	7.00	1	2	standby off-line	0.9998250306	1.0	0.999999995
MSS/CSS	MSS/CSS SERVER	HP J210, 4 CPU, 256 MB, 4 GB	20000	2.5	6	5.00	8.50	1	2	standby off-line	0.9995751805	1.0	0.999999993
MSS	RAID	HP 36 GB RAID	150,000	0.5	6	N/A	6.50	1	1	N/A	0.9999566685	N/A	0.999956669
MSS	MSS WS	SUN Sparcstation 20/50, 128 MB, 4GB	15,947	0.5	6	5.00	6.50	1	2	standby off-line	0.9995925659	1.0	0.999999991
ISS	FDDI CONCENTRATOR	FDDI Concentrator - Bay Networks 2914-04	100,000	0.5	6	5.00	6.50	1	2	standby off-line	0.9999350042	1.0	1.000000000
ISS	FDDI CONCENTRATOR	FDDI Concentrator - Bay Networks 2914-04	100,000	0.5	6	5.00	6.50	2	3	standby off-line	0.9999350042	1.0	1.000000000
ISS	FDDI SWITCH	PowerHub7000 - ALANTEC (4 FDDI cards	146,000	0.5	6	N/A	6.50	1	1	N/A	0.9999554814	N/A	0.999955481
													0.9996638297

EOSD3900 Ao =	0.99966
EOSD3900 MDT =	0.928

Note:
(1) Robot Failure Rate is 25% Duty cycle
(2) Tape Drive Failure Rate is 25% Duty cycle

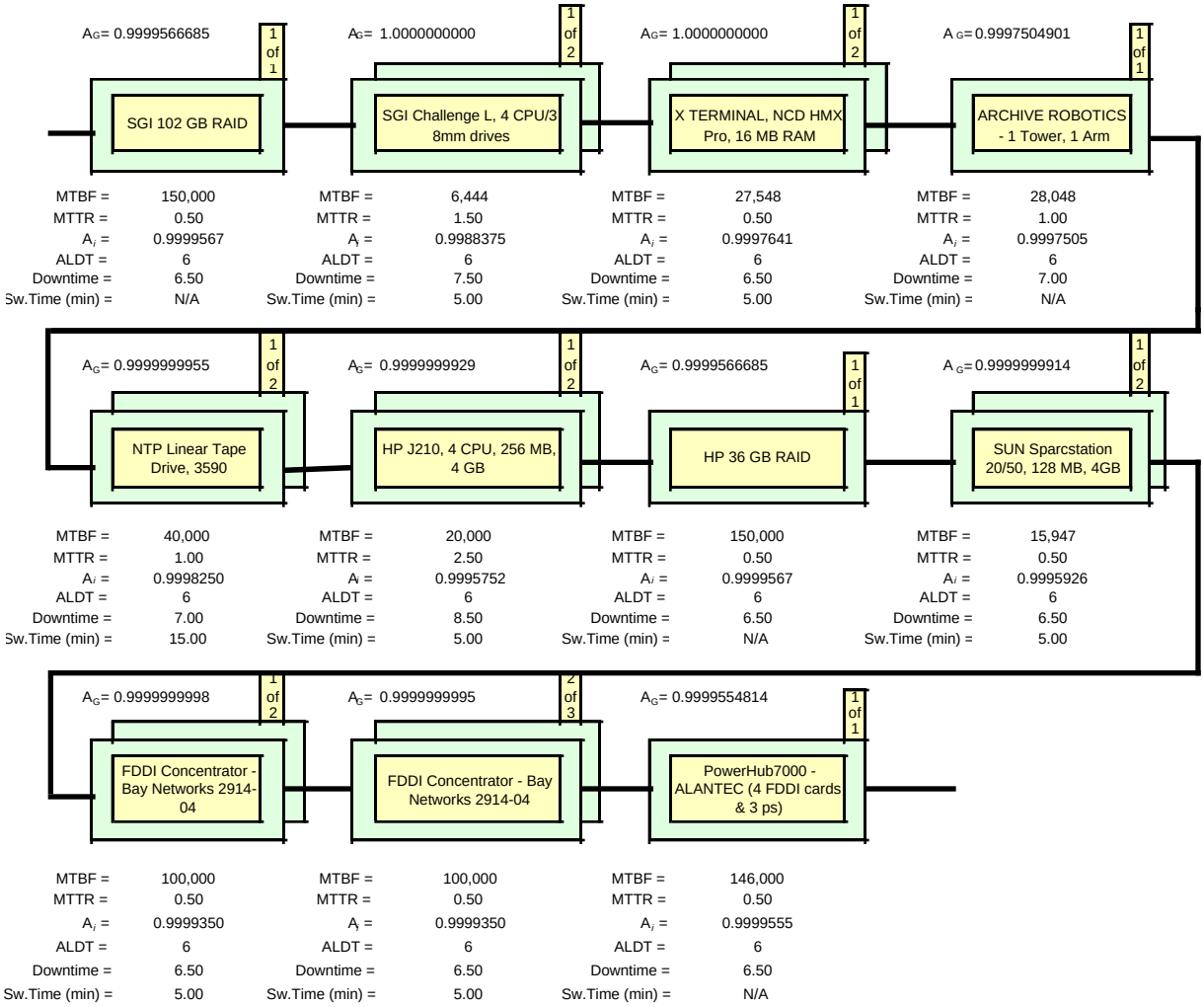
AG= 0.9999566685
1 of 1
SGI 102 GB RAID
MTBF = 150,000
MTTR = 0.50
Ai = 0.9999567
ALDT = 6
Downtime = 6.50
Sw.Time (min) = N/A
AG= 1.0000000000
1 of 2
SGI Challenge L, 4 CPU/3 8mm drives
MTBF = 6,444
MTTR = 1.50
Ai = 0.9988375
ALDT = 6
Downtime = 7.50
Sw.Time (min) = 5.00
AG= 1.0000000000
1 of 2
X TERMINAL, NCD HMX Pro, 16 MB RAM
MTBF = 27,548
MTTR = 0.50
Ai = 0.9997641
ALDT = 6
Downtime = 6.50
Sw.Time (min) = 5.00
A G= 0.9997504901
1 of 1
ARCHIVE ROBOTICS - 1 Tower, 1 Arm
MTBF = 28,048
MTTR = 1.00
Ai = 0.9997505
ALDT = 6
Downtime = 7.00
Sw.Time (min) = N/A
AG= 0.9999999955
1 of 2
NTP Linear Tape Drive, 3590
MTBF = 40,000
MTTR = 1.00
Ai = 0.9998250
ALDT = 6
Downtime = 7.00
Sw.Time (min) = 15.00
AG= 0.9999999929
1 of 2
HP J210, 4 CPU, 256 MB, 4 GB
MTBF = 20,000
MTTR = 2.50
Ai = 0.9995752
ALDT = 6
Downtime = 8.50
Sw.Time (min) = 5.00
AG= 0.9999566685
1 of 1
HP 36 GB RAID
MTBF = 150,000
MTTR = 0.50
Ai = 0.9999567
ALDT = 6
Downtime = 6.50
Sw.Time (min) = N/A
A G= 0.9999999914
1 of 2
SUN Sparcstation 20/50, 128 MB, 4GB
MTBF = 15,947
MTTR = 0.50
Ai = 0.9995926
ALDT = 6
Downtime = 6.50
Sw.Time (min) = 5.00
AG= 0.9999999998
1 of 2
FDDI Concentrator - Bay Networks 2914-04
MTBF = 100,000
MTTR = 0.50
Ai = 0.9999350
ALDT = 6
Downtime = 6.50
Sw.Time (min) = 5.00
AG= 0.9999999995
2 of 3
FDDI Concentrator - Bay Networks 2914-04
MTBF = 100,000
MTTR = 0.50
Ai = 0.9999350
ALDT = 6
Downtime = 6.50
Sw.Time (min) = 5.00
AG= 0.9999554814
1 of 1
PowerHub7000 - ALANTEC (4 FDDI cards & 3 ps)
MTBF = 146,000
MTTR = 0.50
Ai = 0.9999555
ALDT = 6
Downtime = 6.50
Sw.Time (min) = N/A

EOSD3920 Ao/MDT Analytical Results for JPL

EOSD3920:Function of Archiving And Distributing Data (Ao>=.980, MDT<=2.0 hrs)

Subsystem Description	Equipment Description	Model/Part Number	MTBF (hour)	MTTR (hour)	Logistic Delay Time (hour)	Switchover Time (min)	Total Downtime (hour)	Number of Units Required (m)	Total Number Of Units (n)	Redundancy	Unit Availability (Ai)	P	Redundant Group Availability (m out of n)
ACM	APC SERVER	SGI Challenge L, 6 CPU, 256 MB RAM, 4 GB	6,714	1.5	6	5.00	7.50	1	2	y off-line	0.9988841776	1.0	0.999999944
ACM	RAID DISK	51 GB	150,000	0.5	6	N/A	6.50	1	1	N/A	0.9999566685	N/A	0.999956669
ACM	OPS	SUN Ultra 140	8,324	0.5	6	5.00	6.50	1	2	y off-	0.9992197347	1.0	0.999999968
DIP	DISTRIBUTION	SUN Ultra 140	8,324	1.0	6	5.00	7.00	1	2	y off-	0.9991597647	1.0	0.999999966
DIP	RAID DISK	24 GB	150,000	0.5	6	N/A	6.50	1	1	N/A	0.9999566685	N/A	0.999956669
DIP	TAPE STACKER	3, 8mm Drives w/stacker - Exabyte	160,000	0.3	6	N/A	6.25	1	1	N/A	0.9999609390	N/A	0.999960939
DIP	TAPE STACKER	3, 4mm Drives w/stacker - Exabyte	146,000	0.5	6	N/A	6.50	1	1	N/A	0.9999554814	N/A	0.999955481
DIP	CD ROM (1)	CD ROM, Recordable, JVC	58,392	0.5	6	N/A	6.50	1	1	N/A	0.9998886958	N/A	0.999888696
DIP	TAPE DRIVE (1)	3480/3490 TAPE DRIVE	140,000	0.5	6	N/A	6.50	1	1	N/A	0.9999535736	N/A	0.999953574
DIP	TAPE DRIVE (1)	6250 BPI Tape Drive	66,868	1.0	6	N/A	7.00	1	1	N/A	0.9998953271	N/A	0.999895327
DRP	FSMS SERVER	SGI Challenge L, 2 CPU, 512 MB RAM, 10 GB	6,714	1.5	6	5.00	7.50	1	2	y off-line	0.9988841776	1.0	0.999999944
DRP	RAID DISK	17 GB	150,000	0.5	6	N/A	6.50	1	1	N/A	0.9999566685	N/A	0.999956669
DRP	ARCHIVE ROBOTICS (2)	EMASS, Model 2, Tall Quadro Tower, 1 Arm)	11,687	1.0	6	N/A	7.00	2	2	N/A	0.9994014024	N/A	0.998803521
DRP	TAPE DRIVE (2)	3590 Tape Drive (10 each per archive robotics)	16,667	1.0	6	N/A	7.00	1	1	N/A standb	0.9995801847	N/A	0.999580185
DRP	DBMS SERVER	SGI Challenge XL, 2 CPU, 256 MB RAM, 6 GB	5,109	1.5	6	5.00	7.50	1	2	y off-line	0.9985341542	1.0	0.999999904
DRP	RAID DISK	17 GB	150,000	0.5	6	N/A	6.50	1	1	N/A	0.9999566685	N/A	0.999956669
DDS	DOCUMENT	SUN Ultra 140	8,324	1.0	6	5.00	7.00	1	2	y off-	0.9991597647	1.0	0.999999966
DDS	DOCUMENT SVR	6GB	150,000	0.5	6	N/A	6.50	1	1	N/A	0.9999566685	N/A	0.999956669
MSS/CSS	MSS/CSS	HP J210, 4 CPU, 256 MB, 4	20000	2.5	6	5.00	8.50	1	2	y off-	0.9995751805	1.0	0.999999993
MSS	RAID	HP 36 GB RAID	150,000	0.5	6	N/A	6.50	1	1	N/A standb	0.9999566685	N/A	0.999956669
MSS	MSS WS	SUN Sparcstation 20/50, 128 MB, 4GB	15,947	0.5	6	5.00	6.50	1	2	y off-line standb	0.9995925659	1.0	0.999999991
ISS	FDDI CONCENTRATO	FDDI Concentrator - Bay Networks 2914-04	100,000	0.5	6	5.00	6.50	1	2	y off-line standb	0.9999350042	1.0	1.000000000
ISS	FDDI CONCENTRATO	FDDI Concentrator - Bay Networks 2914-04	100,000	0.5	6	5.00	6.50	2	3	y off-line	0.9999350042	1.0	1.000000000
ISS	FDDI SWITCH	PowerHub7000 - ALANTEC (4 FDDI cards & 3 pwr supply)	146,000	0.5	6	N/A	6.50	1	1	N/A	0.9999554814	N/A	0.999955481
													0.997735
		EOSD3920 Ao =	0.99773										
		EOSD3920 MDT =	1.42246										

Note:
(1) Peripherals are 25% Duty Cycle
(2) Archive Robot and Drives Failure Rates are 60% Duty Cyle

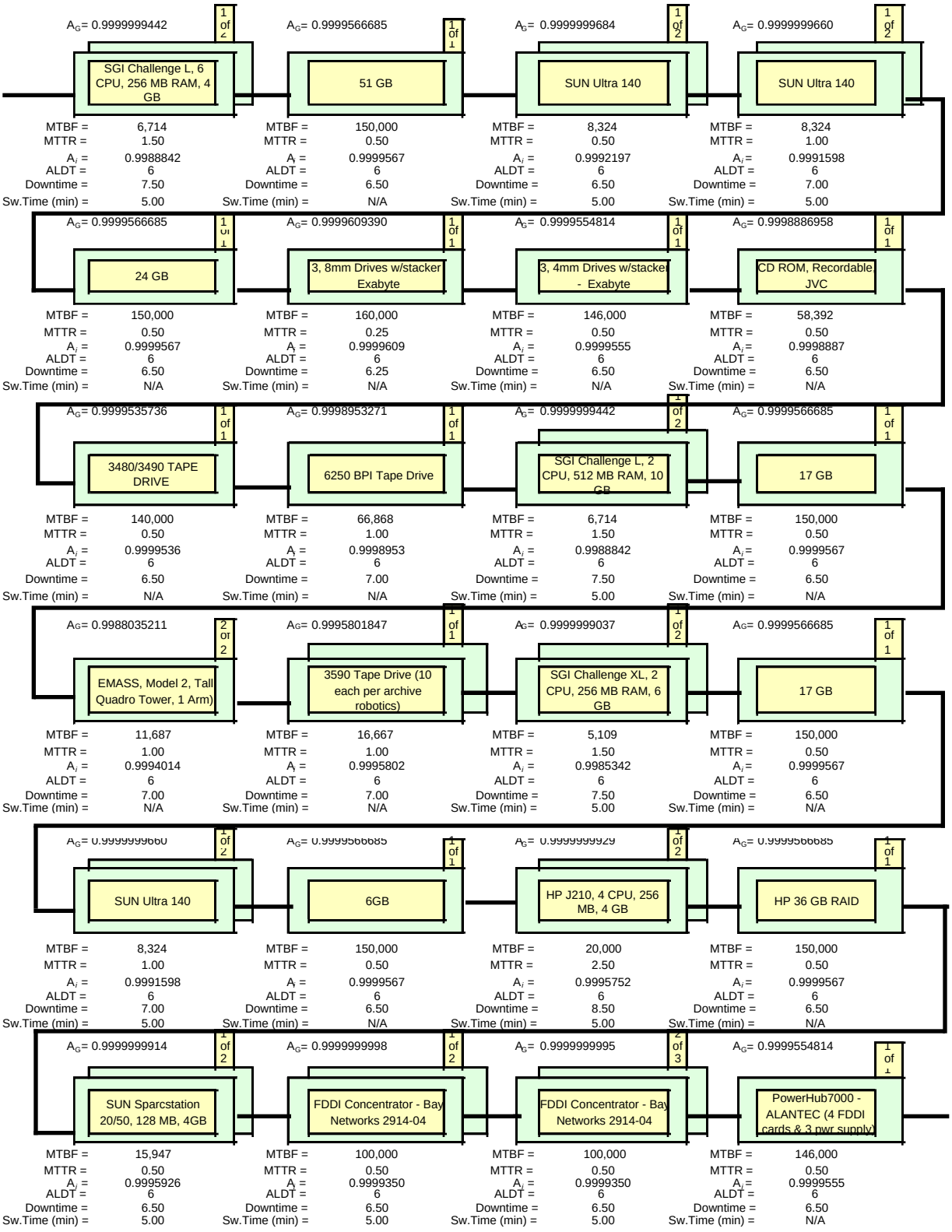
A_G= 0.9999999442
1 of 2
SGI Challenge L, 6 CPU, 256 MB RAM, 4 GB
MTBF = 6,714
MTTR = 1.50
A_i = 0.9988842
ALDT = 6
Downtime = 7.50
Sw.Time (min) = 5.00
A_G= 0.9999566685
1 of 1
51 GB
MTBF = 150,000
MTTR = 0.50
A_i = 0.9999567
ALDT = 6
Downtime = 6.50
Sw.Time (min) = N/A
A_G= 0.9999999684
1 of 2
SUN Ultra 140
MTBF = 8,324
MTTR = 0.50
A_i = 0.9992197
ALDT = 6
Downtime = 6.50
Sw.Time (min) = 5.00
A_G= 0.9999999660
1 of 2
SUN Ultra 140
MTBF = 8,324
MTTR = 1.00
A_i = 0.9991598
ALDT = 6
Downtime = 7.00
Sw.Time (min) = 5.00
A_G= 0.9999566685
1 of 1
24 GB
MTBF = 150,000
MTTR = 0.50
A_i = 0.9999567
ALDT = 6
Downtime = 6.50
Sw.Time (min) = N/A
A_G= 0.9999609390
1 of 1
3, 8mm Drives w/stacker Exabyte
MTBF = 160,000
MTTR = 0.25
A_i = 0.9999609
ALDT = 6
Downtime = 6.25
Sw.Time (min) = N/A
A_G= 0.9999554814
1 of 1
3, 4mm Drives w/stacker - Exabyte
MTBF = 146,000
MTTR = 0.50
A_i = 0.9999555
ALDT = 6
Downtime = 6.50
Sw.Time (min) = N/A
A_G= 0.9998886958
1 of 1
CD ROM, Recordable JVC
MTBF = 58,392
MTTR = 0.50
A_i = 0.9998887
ALDT = 6
Downtime = 6.50
Sw.Time (min) = N/A
A_G= 0.9999535736
1 of 1
3480/3490 TAPE DRIVE
MTBF = 140,000
MTTR = 0.50
A_i = 0.9999536
ALDT = 6
Downtime = 6.50
Sw.Time (min) = N/A
A_G= 0.9998953271
1 of 1
6250 BPI Tape Drive
MTBF = 66,868
MTTR = 1.00
A_i = 0.9998953
ALDT = 6
Downtime = 7.00
Sw.Time (min) = N/A
A_G= 0.9999999442
1 of 2
SGI Challenge L, 2 CPU, 512 MB RAM, 10 GB
MTBF = 6,714
MTTR = 1.50
A_i = 0.9988842
ALDT = 6
Downtime = 7.50
Sw.Time (min) = 5.00
A_G= 0.9999566685
1 of 1
17 GB
MTBF = 150,000
MTTR = 0.50
A_i = 0.9999567
ALDT = 6
Downtime = 6.50
Sw.Time (min) = N/A
A_G= 0.9988035211
2 of 2
EMASS, Model 2, Tall Quadro Tower, 1 Arm)
MTBF = 11,687
MTTR = 1.00
A_i = 0.9994014
ALDT = 6
Downtime = 7.00
Sw.Time (min) = N/A
A_G= 0.9995801847
1 of 1
3590 Tape Drive (10 each per archive robotics)
MTBF = 16,667
MTTR = 1.00
A_i = 0.9995802
ALDT = 6
Downtime = 7.00
Sw.Time (min) = N/A
A_G= 0.9999999037
1 of 2
SGI Challenge XL, 2 CPU, 256 MB RAM, 6 GB
MTBF = 5,109
MTTR = 1.50
A_i = 0.9985342
ALDT = 6
Downtime = 7.50
Sw.Time (min) = 5.00
A_G= 0.9999566685
1 of 1
17 GB
MTBF = 150,000
MTTR = 0.50
A_i = 0.9999567
ALDT = 6
Downtime = 6.50
Sw.Time (min) = N/A
A_G= 0.9999999660
1 of 2
SUN Ultra 140
MTBF = 8,324
MTTR = 1.00
A_i = 0.9991598
ALDT = 6
Downtime = 7.00
Sw.Time (min) = 5.00
A_G= 0.9999566685
1 of 1
6GB
MTBF = 150,000
MTTR = 0.50
A_i = 0.9999567
ALDT = 6
Downtime = 6.50
Sw.Time (min) = N/A
A_G= 0.9999999929
1 of 2
HP J210, 4 CPU, 256 MB, 4 GB
MTBF = 20,000
MTTR = 2.50
A_i = 0.9995752
ALDT = 6
Downtime = 8.50
Sw.Time (min) = 5.00
A_G= 0.9999566685
1 of 1
HP 36 GB RAID
MTBF = 150,000
MTTR = 0.50
A_i = 0.9999567
ALDT = 6
Downtime = 6.50
Sw.Time (min) = N/A
A_G= 0.9999999914
1 of 2
SUN Sparcstation 20/50, 128 MB, 4GB
MTBF = 15,947
MTTR = 0.50
A_i = 0.9995926
ALDT = 6
Downtime = 6.50
Sw.Time (min) = 5.00
A_G= 0.9999999998
1 of 2
FDDI Concentrator - Bay Networks 2914-04
MTBF = 100,000
MTTR = 0.50
A_i = 0.9999350
ALDT = 6
Downtime = 6.50
Sw.Time (min) = 5.00
A_G= 0.9999999995
2 of 3
FDDI Concentrator - Bay Networks 2914-04
MTBF = 100,000
MTTR = 0.50
A_i = 0.9999350
ALDT = 6
Downtime = 6.50
Sw.Time (min) = 5.00
A_G= 0.9999554814
1 of 1
PowerHub7000 - ALANTEC (4 FDDI cards & 3 pwr supply)
MTBF = 146,000
MTTR = 0.50
A_i = 0.9999555
ALDT = 6
Downtime = 6.50
Sw.Time (min) = N/A

EOSD3930 Ao/MDT Analytical Results for JPL

EOSD3930: User Interfaces to IMS Services at Individual DAAC Site (Ao>=.993, MDT<=2.0 hrs)

Subsystem Description	Equipment Description	Model/Part Number	MTBF (hour)	MTTR (hour)	Admin. Logistic Delay Time (hour)	Switchover Time (min)	Total Downtime (hour)	Number of Units Required (m)	Total Number Of Units (n)	Redundancy	Unit Availability (Ai)	P	Redundant Group Availability (m out of n)
Data Manag.	DMG SERVER	K400, 2 CPU, 512 MB RAM, 8 GB, 8 mm	22,747	2.7	6	N/A	8.70	1	1	N/A	0.9996176782	N/A	0.999617678
Data Manag.	RAID DISK	HP 10 GB	150,000	0.5	6	N/A	6.50	1	1	N/A	0.9999566685	N/A	0.999956669
ACM	APC SERVER	SGI Challenge L, 6 CPU, 256 MB RAM, 4 GB	6,714	1.5	6	5.00	7.50	1	2	standby off-line	0.9988841776	1.0	0.999999944
ACM	RAID DISK	51 GB	150,000	0.5	6	N/A	6.50	1	1	N/A	0.9999566685	N/A	0.999956669
ACM	OPS WORKSTATION	SUN Ultra 140	8,324	0.5	6	5.00	6.50	1	2	standby off-line	0.9992197347	1.0	0.999999968
DRP	DBMS SERVER	SGI Challenge XL, 2 CPU, 256 MB RAM, 6 GB	5,109	1.5	6	5.00	7.50	1	2	standby off-line	0.9985341542	1.0	0.999999904
DRP	RAID DISK	17 GB	150,000	0.5	6	N/A	6.50	1	1	N/A	0.9999566685	N/A	0.999956669
MSS/CSS	MSS/CSS SERVER	HP J210, 4 CPU, 256 MB, 4 GB	20000	2.5	6	5.00	8.50	1	2	standby off-line	0.9995751805	1.0	0.999999993
MSS	RAID	HP 36 GB RAID	150,000	0.5	6	N/A	6.50	1	1	N/A	0.9999566685	N/A	0.999956669
MSS	MSS WS	SUN Sparcstation 20/50, 128	15,947	0.5	6	5.00	6.50	1	2	standby off-line	0.9995925659	1.0	0.999999991
ISS	FDDI CONCENTRATO	FDDI Concentrator - Bay Networks 2914-04	100,000	0.5	6	5.00	6.50	1	2	standby off-line	0.9999350042	1.0	1.000000000
ISS	FDDI CONCENTRATO	FDDI Concentrator - Bay Networks 2914-04	100,000	0.5	6	5.00	6.50	2	3	standby off-line	0.9999350042	1.0	1.000000000
ISS	FDDI SWITCH	PowerHub7000 - ALANTEC (4 FDDI cards & 3 pwr	146,000	0.5	6	N/A	6.50	1	1	N/A	0.9999554814	N/A	0.999955481
													0.9998252984

EOSD3930 Ao =	0.99983
EOSD3930 MDT =	0.359266

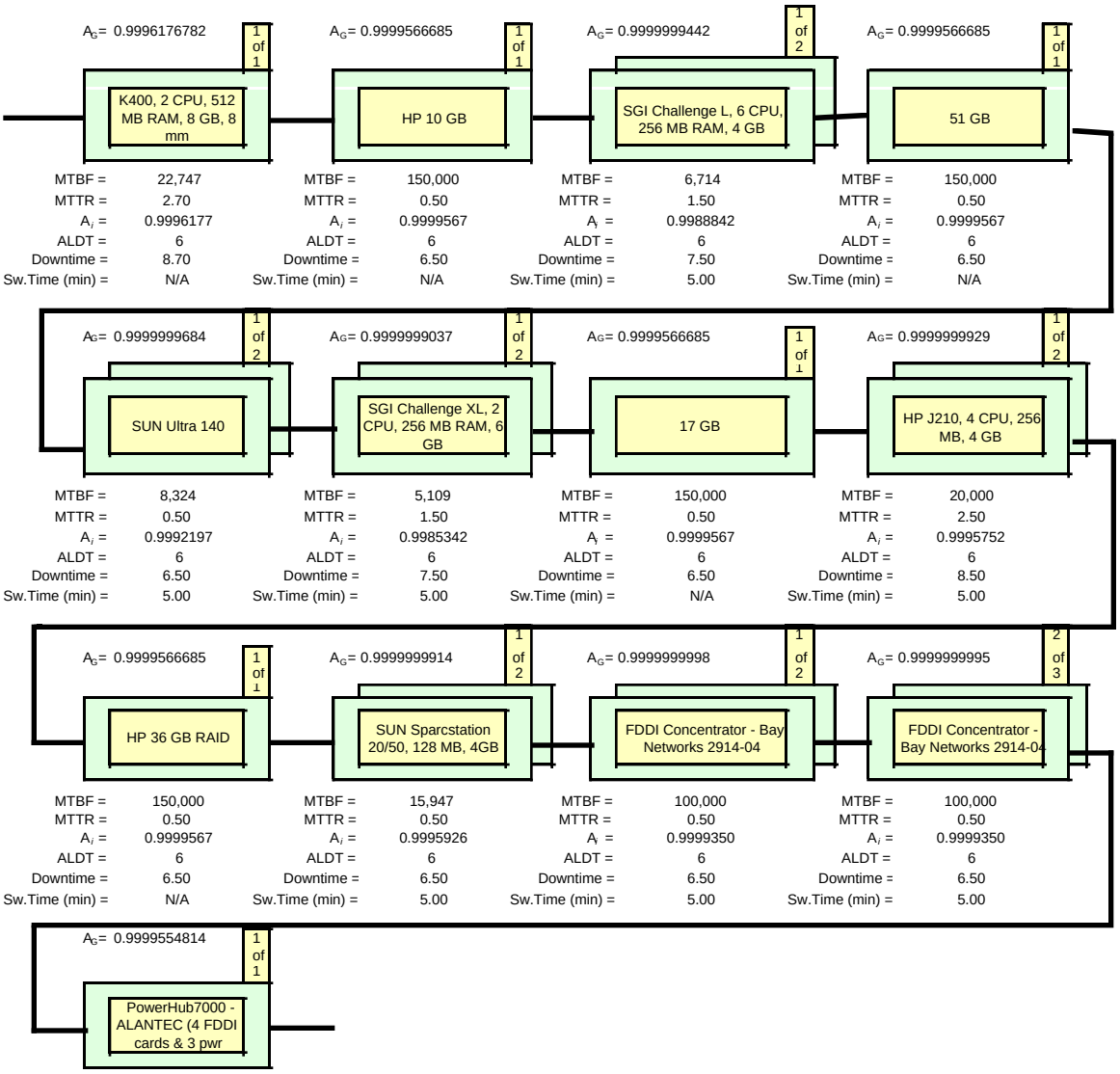
A_G= 0.9996176782
1 of 1
K400, 2 CPU, 512 MB RAM, 8 GB, 8 mm
MTBF = 22,747
MTTR = 2.70
A_i = 0.9996177
ALDT = 6
Downtime = 8.70
Sw.Time (min) = N/A
A_G= 0.9999566685
1 of 1
HP 10 GB
MTBF = 150,000
MTTR = 0.50
A_i = 0.9999567
ALDT = 6
Downtime = 6.50
Sw.Time (min) = N/A
A_G= 0.9999999442
1 of 2
SGI Challenge L, 6 CPU, 256 MB RAM, 4 GB
MTBF = 6,714
MTTR = 1.50
A_i = 0.9988842
ALDT = 6
Downtime = 7.50
Sw.Time (min) = 5.00
A_G= 0.9999566685
1 of 1
51 GB
MTBF = 150,000
MTTR = 0.50
A_i = 0.9999567
ALDT = 6
Downtime = 6.50
Sw.Time (min) = N/A
A_G= 0.9999999684
1 of 2
SUN Ultra 140
MTBF = 8,324
MTTR = 0.50
A_i = 0.9992197
ALDT = 6
Downtime = 6.50
Sw.Time (min) = 5.00
A_G= 0.9999999037
1 of 2
SGI Challenge XL, 2 CPU, 256 MB RAM, 6 GB
MTBF = 5,109
MTTR = 1.50
A_i = 0.9985342
ALDT = 6
Downtime = 7.50
Sw.Time (min) = 5.00
A_G= 0.9999566685
1 of 1
17 GB
MTBF = 150,000
MTTR = 0.50
A_i = 0.9999567
ALDT = 6
Downtime = 6.50
Sw.Time (min) = N/A
A_G= 0.9999999929
1 of 2
HP J210, 4 CPU, 256 MB, 4 GB
MTBF = 20,000
MTTR = 2.50
A_i = 0.9995752
ALDT = 6
Downtime = 8.50
Sw.Time (min) = 5.00
A_G= 0.9999566685
1 of 1
HP 36 GB RAID
MTBF = 150,000
MTTR = 0.50
A_i = 0.9999567
ALDT = 6
Downtime = 6.50
Sw.Time (min) = N/A
A_G= 0.9999999914
1 of 2
SUN Sparcstation 20/50, 128 MB, 4GB
MTBF = 15,947
MTTR = 0.50
A_i = 0.9995926
ALDT = 6
Downtime = 6.50
Sw.Time (min) = 5.00
A_G= 0.9999999998
1 of 2
FDDI Concentrator - Bay Networks 2914-04
MTBF = 100,000
MTTR = 0.50
A_i = 0.9999350
ALDT = 6
Downtime = 6.50
Sw.Time (min) = 5.00
A_G= 0.9999999995
2 of 3
FDDI Concentrator - Bay Networks 2914-04
MTBF = 100,000
MTTR = 0.50
A_i = 0.9999350
ALDT = 6
Downtime = 6.50
Sw.Time (min) = 5.00
A_G= 0.9999554814
1 of 1
PowerHub7000 - ALANTEC (4 FDDI cards & 3 pwr
MTBF = 146,000
MTTR = 0.50
A_i = 0.9999555
ALDT = 6
Downtime = 6.50
Sw.Time (min) = N/A

EOSD3940 Ao/MDT Analytical Results for JPL

EOSD3940: Function Of Information Searches On The ECS Directory(Ao>=.993, MDT<=2.0 hrs)

Subsystem Description	Equipment Description	Model/Part Number	MTBF (hour)	MTTR (hour)	Admin. Logistic Delay Time (hour)	Switchover Time (min)	Total Downtime (hour)	Number of Units Required (m)	Total Number Of Units (n)	Redundancy	Unit Availability (Ai)	P	Redundant Group Availability (m out of n)
Data Manag.	DMG SERVER	K400, 2 CPU, 512 MB RAM, 8 GB, 8 mm	22,747	2.7	6	N/A	8.70	1	1	N/A	0.9996176782	N/A	0.999617678
Data Manag.	RAID DISK	HP 10 GB	150,000	0.5	6	N/A	6.50	1	1	N/A	0.9999566685	N/A	0.999956669
ACM	APC SERVER	SGI Challenge L, 6 CPU, 256 MB RAM, 4 GB	6,714	1.5	6	5.00	7.50	1	2	standby off-line	0.9988841776	1.0	0.999999944
ACM	RAID DISK	51 GB	150,000	0.5	6	N/A	6.50	1	1	N/A	0.9999566685	N/A	0.999956669
ACM	OPS WORKSTATION	SUN Ultra 140	8,324	0.5	6	5.00	6.50	1	2	standby off-line	0.9992197347	1.0	0.999999968
MSS/CSS	MSS/CSS SERVER	HP J210, 4 CPU, 256 MB, 4 GB	20000	2.5	6	5.00	8.50	1	2	standby off-line	0.9995751805	1.0	0.999999993
MSS	RAID	HP 36 GB RAID	150,000	0.5	6	N/A	6.50	1	1	N/A	0.9999566685	N/A	0.999956669
MSS	MSS WS	SUN Sparcstation 20/50, 128	15,947	0.5	6	5.00	6.50	1	2	standby off-line	0.9995925659	1.0	0.999999991
ISS	FDDI CONCENTRATOR	FDDI Concentrator - Bay Networks 2914-04	100,000	0.5	6	5.00	6.50	1	2	standby off-line	0.9999350042	1.0	1.000000000
ISS	FDDI CONCENTRATOR	FDDI Concentrator - Bay Networks 2914-04	100,000	0.5	6	5.00	6.50	2	3	standby off-line	0.9999350042	1.0	1.000000000
ISS	FDDI SWITCH	PowerHub7000 - ALANTEC (4 FDDI cards & 3 pwr	146,000	0.5	6	N/A	6.50	1	1	N/A	0.9999554814	N/A	0.999955481
													0.9998687204
		EOSD3940 Ao =	0.99987										
		EOSD3940 MDT =	0.39024										

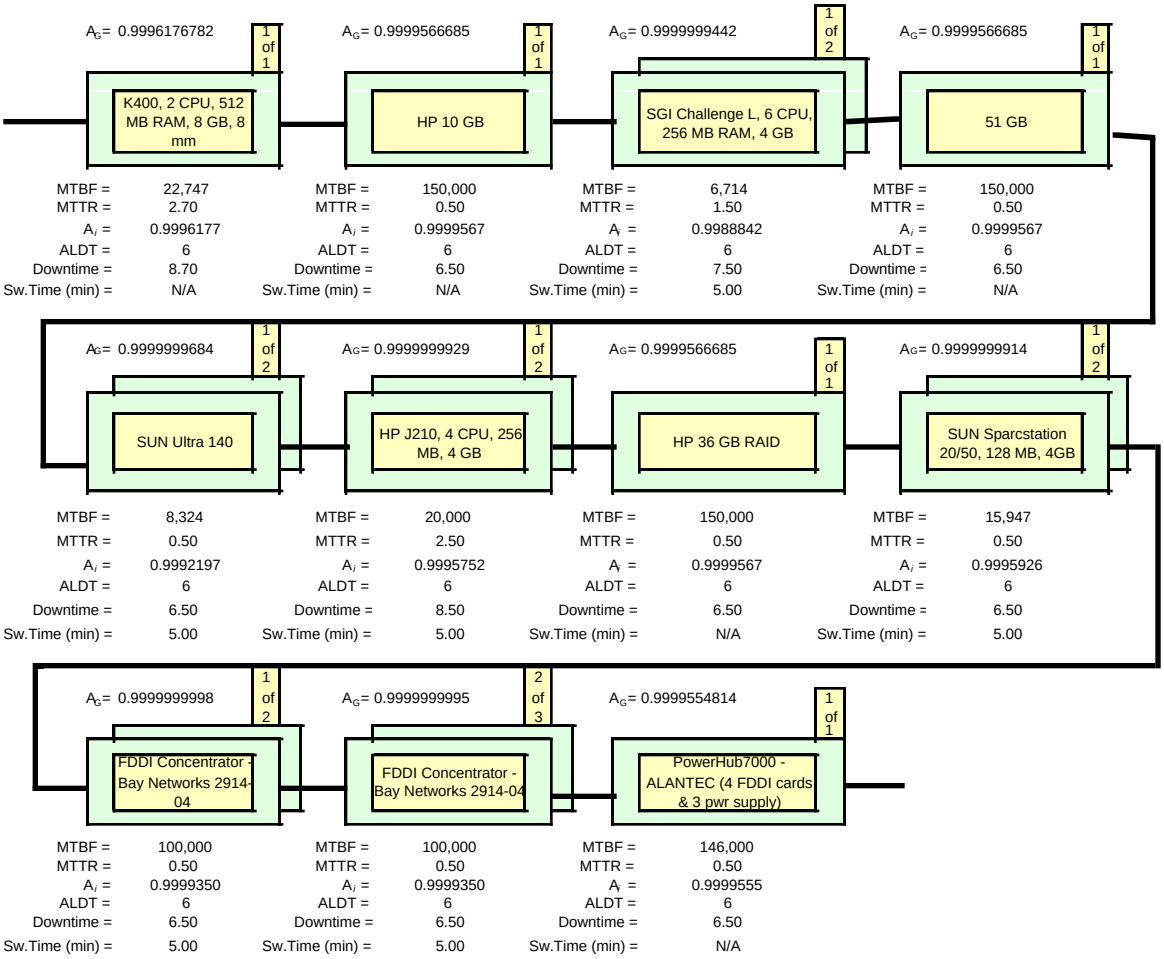

EOSD3960 Ao/MDT Analytical Results for JPL

EOSD3960:Function Of MetaData Ingest and Update (Ao>=.96, MDT<=4.0 hrs)

Subsystem Description	Equipment Description	Model/Part Number	MTBF (hour)	MTTR (hour)	Admin. Logistic Delay Time (hour)	Switchover Time (min)	Total Downtime (hour)	Number of Units Required (m)	Total Number Of Units (n)	Redundancy	Unit Availability (Ai)	P	Redundant Group Availability (m out of n)
Data Manag.	DATA SPECIALIST W/S	SUN Ultra 140	8,324	0.5	6	5.00	6.50	1	2	standby off-line	0.9992197347	1.0	1.000000000
Ingest	RAID	SGI 102 GB RAID	150,000	0.5	6	N/A	6.50	1	1	N/A	0.9999566685	N/A	0.999956669
Ingest	INGEST SVR/8mm Drives	SGI Challenge L, 4 CPU/3 8mm drives	6,444	1.5	6	5.00	7.50	1	2	standby off-line	0.9988374797	1.0	1.000000000
Ingest	X TERM.(Red.w/Dat Svr W/S)	X TERMINAL, NCD HMX Pro, 16 MB RAM	27,548	0.5	6	5.00	6.50	1	2	standby off-line	0.9997641039	1.0	1.000000000
Ingest	ARCHIVE ROBOTICS(1)	ARCHIVE ROBOTICS - 1 Tower, 1 Arm	28,048	1.0	6	N/A	7.00	1	1	N/A	0.9997504901	N/A	0.999750490
Ingest	LINEAR MAG	NTP Linear Tape Drive, 3590	40,000	1.0	6	15.00	7.00	1	2	standby off-line	0.9998250306	1.0	0.999999995
ACM	APC SERVER	SGI Challenge L, 6 CPU, 256 MB RAM, 4 GB	6,714	1.5	6	5.00	7.50	1	2	standby off-line	0.9988841776	1.0	0.999999944
ACM	RAID DISK	51 GB	150,000	0.5	6	N/A	6.50	1	1	N/A	0.9999566685	N/A	0.999956669
ACM	OPS	SUN Ultra 140	8,324	0.5	6	5.00	6.50	1	2	standby off-line	0.9992197347	1.0	0.999999968
DIP	DISTRIBUTION SERVER	SUN Ultra 140	8,324	1.0	6	5.00	7.00	1	2	standby off-line	0.9991597647	1.0	0.999999966
DIP	RAID DISK	24 GB	150,000	0.5	6	N/A	6.50	1	1	N/A	0.9999566685	N/A	0.999956669
DRP	DBMS SERVER	SGI Challenge XL, 2 CPU, 256 MB RAM, 6 GB	5,109	1.5	6	5.00	7.50	1	2	standby off-line	0.9985341542	1.0	0.999999904
DRP	RAID DISK	17 GB	150,000	0.5	6	N/A	6.50	1	1	N/A	0.9999566685	N/A	0.999956669
MSS/CSS	MSS/CSS SERVER	HP J210, 4 CPU, 256 MB, 4	20000	2.5	6	5.00	8.50	1	2	off-line	0.9995751805	1.0	0.999999993
MSS	RAID	HP 36 GB RAID	150,000	0.5	6	N/A	6.50	1	1	N/A	0.9999566685	N/A	0.999956669
MSS	MSS WS	SUN Sparcstation 20/50, 128 MB, 4GB	15,947	0.5	6	5.00	6.50	1	2	standby off-line	0.9995925659	1.0	0.999999991
ISS	FDDI CONCENTRATOR	FDDI Concentrator - Bay Networks 2914-04	100,000	0.5	6	5.00	6.50	1	2	standby off-line	0.9999350042	1.0	1.000000000
ISS	FDDI CONCENTRATOR	FDDI Concentrator - Bay Networks 2914-04	100,000	0.5	6	5.00	6.50	1	2	standby off-line	0.9999350042	1.0	1.000000000
ISS	FDDI CONCENTRATOR	FDDI Concentrator - Bay Networks 2914-04	100,000	0.5	6	5.00	6.50	2	3	standby off-line	0.9999350042	1.0	1.000000000
ISS	FDDI SWITCH	PowerHub7000 - ALANTEC (4 FDDI cards & 3 pwr supply)	146,000	0.5	6	N/A	6.50	1	1	N/A	0.9999554814	N/A	0.999955481
													0.9997819403

EOSD3960 Ao =	0.99978
EOSD3960 MDT =	0.36587

Note: (1) Robot Failure Rate is 25% Duty cycle
(2) Tape Drive Failure Rate is 25% Duty cycle

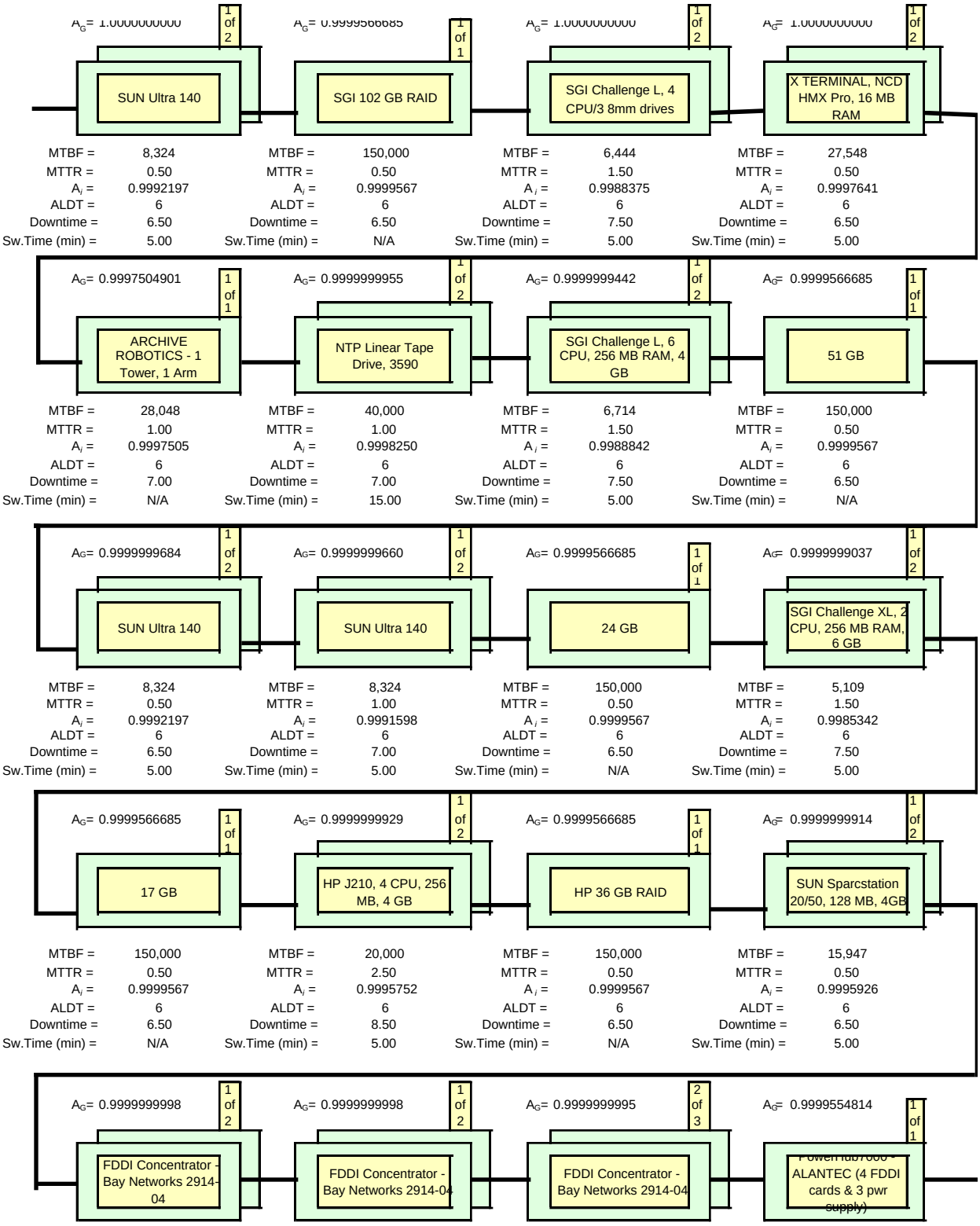
A_G= 1.0000000000
1 of 2
SUN Ultra 140
MTBF = 8,324
MTTR = 0.50
A_i = 0.9992197
ALDT = 6
Downtime = 6.50
Sw.Time (min) = 5.00
A_G= 0.9999566685
1 of 1
SGI 102 GB RAID
MTBF = 150,000
MTTR = 0.50
A_i = 0.9999567
ALDT = 6
Downtime = 6.50
Sw.Time (min) = N/A
A_G= 1.0000000000
1 of 2
SGI Challenge L, 4 CPU/3 8mm drives
MTBF = 6,444
MTTR = 1.50
A_i = 0.9988375
ALDT = 6
Downtime = 7.50
Sw.Time (min) = 5.00
A_G= 1.0000000000
1 of 2
X TERMINAL, NCD HMX Pro, 16 MB RAM
MTBF = 27,548
MTTR = 0.50
A_i = 0.9997641
ALDT = 6
Downtime = 6.50
Sw.Time (min) = 5.00
A_G= 0.9997504901
1 of 1
ARCHIVE ROBOTICS - 1 Tower, 1 Arm
MTBF = 28,048
MTTR = 1.00
A_i = 0.9997505
ALDT = 6
Downtime = 7.00
Sw.Time (min) = N/A
A_G= 0.9999999955
1 of 2
NTP Linear Tape Drive, 3590
MTBF = 40,000
MTTR = 1.00
A_i = 0.9998250
ALDT = 6
Downtime = 7.00
Sw.Time (min) = 15.00
A_G= 0.9999999442
1 of 2
SGI Challenge L, 6 CPU, 256 MB RAM, 4 GB
MTBF = 6,714
MTTR = 1.50
A_i = 0.9988842
ALDT = 6
Downtime = 7.50
Sw.Time (min) = 5.00
A_G= 0.9999566685
1 of 1
51 GB
MTBF = 150,000
MTTR = 0.50
A_i = 0.9999567
ALDT = 6
Downtime = 6.50
Sw.Time (min) = N/A
A_G= 0.9999999684
1 of 2
SUN Ultra 140
MTBF = 8,324
MTTR = 0.50
A_i = 0.9992197
ALDT = 6
Downtime = 6.50
Sw.Time (min) = 5.00
A_G= 0.9999999660
1 of 2
SUN Ultra 140
MTBF = 8,324
MTTR = 1.00
A_i = 0.9991598
ALDT = 6
Downtime = 7.00
Sw.Time (min) = 5.00
A_G= 0.9999566685
1 of 1
24 GB
MTBF = 150,000
MTTR = 0.50
A_i = 0.9999567
ALDT = 6
Downtime = 6.50
Sw.Time (min) = N/A
A_G= 0.9999999037
1 of 2
SGI Challenge XL, 2 CPU, 256 MB RAM, 6 GB
MTBF = 5,109
MTTR = 1.50
A_i = 0.9985342
ALDT = 6
Downtime = 7.50
Sw.Time (min) = 5.00
A_G= 0.9999566685
1 of 1
17 GB
MTBF = 150,000
MTTR = 0.50
A_i = 0.9999567
ALDT = 6
Downtime = 6.50
Sw.Time (min) = N/A
A_G= 0.9999999929
1 of 2
HP J210, 4 CPU, 256 MB, 4 GB
MTBF = 20,000
MTTR = 2.50
A_i = 0.9995752
ALDT = 6
Downtime = 8.50
Sw.Time (min) = 5.00
A_G= 0.9999566685
1 of 1
HP 36 GB RAID
MTBF = 150,000
MTTR = 0.50
A_i = 0.9999567
ALDT = 6
Downtime = 6.50
Sw.Time (min) = N/A
A_G= 0.9999999914
1 of 2
SUN Sparcstation 20/50, 128 MB, 4GB
MTBF = 15,947
MTTR = 0.50
A_i = 0.9995926
ALDT = 6
Downtime = 6.50
Sw.Time (min) = 5.00
A_G= 0.9999999998
1 of 2
FDDI Concentrator - Bay Networks 2914-04
MTBF = 100,000
MTTR = 0.50
A_i = 0.9999350
ALDT = 6
Downtime = 6.50
Sw.Time (min) = 5.00
A_G= 0.9999999998
1 of 2
FDDI Concentrator - Bay Networks 2914-04
MTBF = 100,000
MTTR = 0.50
A_i = 0.9999350
ALDT = 6
Downtime = 6.50
Sw.Time (min) = 5.00
A_G= 0.9999999995
2 of 3
FDDI Concentrator - Bay Networks 2914-04
MTBF = 100,000
MTTR = 0.50
A_i = 0.9999350
ALDT = 6
Downtime = 6.50
Sw.Time (min) = 5.00
A_G= 0.9999554814
1 of 1
Powerhub7000 - ALANTEC (4 FDDI cards & 3 pwr supply)
MTBF = 146,000
MTTR = 0.50
A_i = 0.9999555
ALDT = 6
Downtime = 6.50
Sw.Time (min) = N/A

EOSD3970 Ao/MDT Analytical Results for JPL

EOSD3970: Function Of Info. Searches On Local Holdings (Ao>=.96, MDT<=4.0 hrs)

Subsystem Description	Equipment Description	Model/Part Number	MTBF (hour)	MTTR (hour)	Admin. Logistic Delay Time (hour)	Switchover Time (min)	Total Downtime (hour)	Number of Units Required (m)	Total Number Of Units (n)	Redundancy	Unit Availability (Ai)	P	Redundant Group Availability (m out of n)
ACM	APC SERVER	SGI Challenge L, 6 CPU, 256 MB RAM, 4 GB	6,714	1.5	6	5.00	7.50	1	2	standby off-line	0.9988841776	1.0	0.999999944
ACM	RAID DISK	51 GB	150,000	0.5	6	N/A	6.50	1	1	N/A	0.9999566685	N/A	0.999956669
ACM	OPS WORKSTATION	SUN Ultra 140	8,324	0.5	6	5.00	6.50	1	2	off-line	0.9992197347	1.0	0.999999968
DRP	DBMS SERVER	SGI Challenge XL, 2 CPU, 256 MB RAM, 6 GB	5,109	1.5	6	5.00	7.50	1	2	standby off-line	0.9985341542	1.0	0.999999904
DRP	RAID DISK	17 GB	150,000	0.5	6	N/A	6.50	1	1	N/A	0.9999566685	N/A	0.999956669
MSS/CSS	MSS/CSS SERVER	HP J210, 4 CPU, 256 MB, 4	20000	2.5	6	5.00	8.50	1	2	off-line	0.9995751805	1.0	0.999999993
MSS	RAID	HP 36 GB RAID	150,000	0.5	6	N/A	6.50	1	1	N/A	0.9999566685	N/A	0.999956669
MSS	MSS WS	SUN Sparcstation 20/50, 128 MB, 4GB	15,947	0.5	6	5.00	6.50	1	2	standby off-line	0.9995925659	1.0	0.999999991
ISS	FDDI CONCENTRATOR	FDDI Concentrator - Bay Networks 2914-04	100,000	0.5	6	5.00	6.50	1	2	standby off-line	0.9999350042	1.0	1.000000000
ISS	FDDI CONCENTRATOR	FDDI Concentrator - Bay Networks 2914-04	100,000	0.5	6	5.00	6.50	2	3	standby off-line	0.9999350042	1.0	1.000000000
ISS	FDDI SWITCH	PowerHub7000 - ALANTEC (4 FDDI cards & 3 pwr supply)	146,000	0.5	6	N/A	6.50	1	1	N/A	0.9999554814	N/A	0.999955481
													0.9998252984

EOSD3970 Ao = 0.99983
EOSD3970 MDT = 0.35927

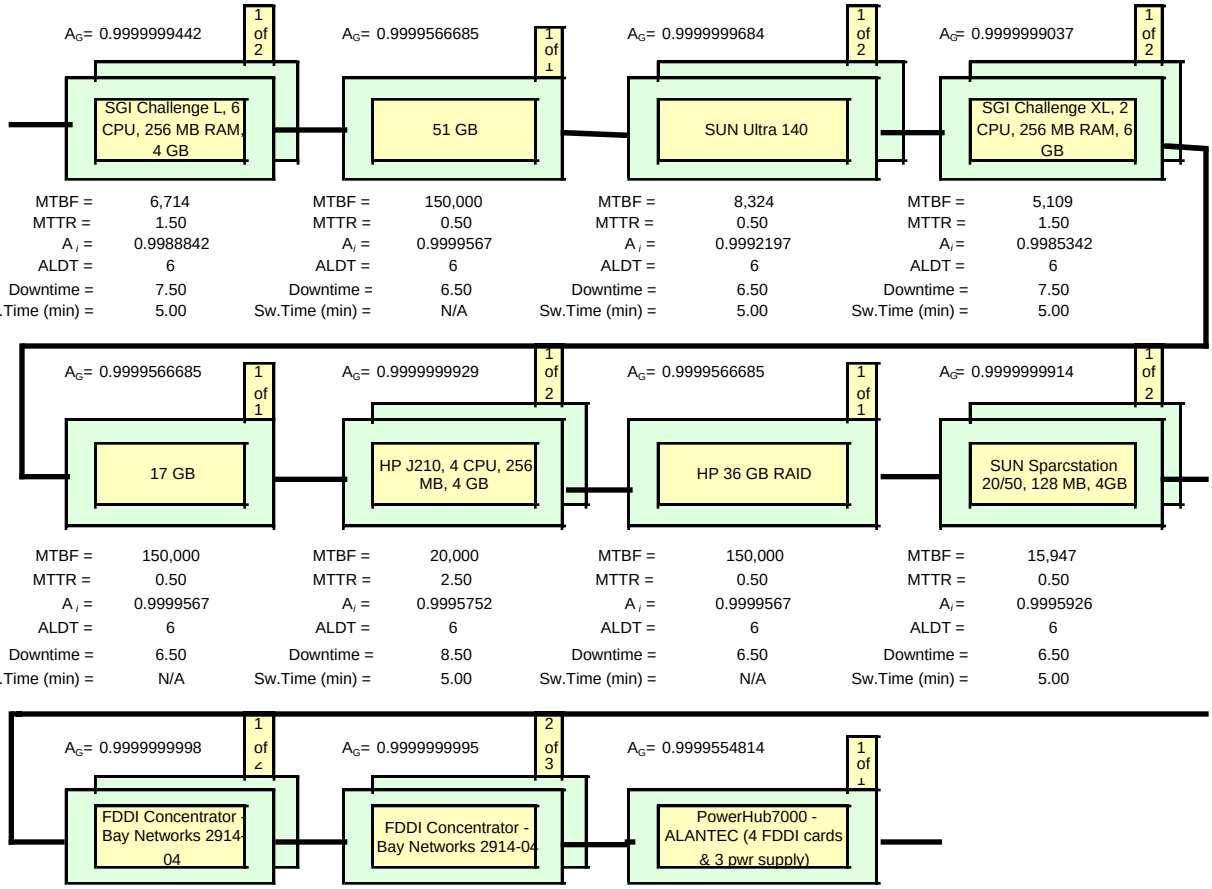

EOSD3980 Ao/MDT Analytical Results for JPL

EOSD3980: Function Of Local Data Order Submission (Ao>=.96, MDT<=4.0 hrs)

Subsystem Description	Equipment Description	Model/Part Number	MTBF (hour)	MTTR (hour)	Admin. Logistic Delay Time (hour)	Switchover Time (min)	Total Downtime (hour)	Number of Units Required (m)	Total Number Of Units (n)	Redundancy	Unit Availability (Ai)	P	Redundant Group Availability (m out of n)
Data Manag.	DATA SPECIALIST W/S	SUN Ultra 140	8,324	0.5	6	5.00	6.50	1	3	standby off-line	0.9992197347	1.0	1.000000000
ACM	APC SERVER	SGI Challenge L, 6 CPU, 256 MB RAM, 4 GB	6,714	1.5	6	5.00	7.50	1	2	standby off-line	0.9988841776	1.0	0.999999944
ACM	RAID DISK	51 GB	150,000	0.5	6	N/A	6.50	1	1	N/A	0.9999566685	N/A	0.999956669
ACM	OPS WORKSTATION	SUN Ultra 140	8,324	0.5	6	5.00	6.50	1	2	standby off-line	0.9992197347	1.0	0.999999968
MSS/CSS	MSS/CSS SERVER	HP J210, 4 CPU, 256 MB, 4 GB	20000	2.5	6	5.00	8.50	1	2	standby off-line	0.9995751805	1.0	0.999999993
MSS	RAID	HP 36 GB RAID	150,000	0.5	6	N/A	6.50	1	1	N/A	0.9999566685	N/A	0.999956669
MSS	MSS WS	SUN Sparcstation 20/50, 128 MB, 4GB	15,947	0.5	6	5.00	6.50	1	2	standby off-line	0.9995925659	1.0	0.999999991
ISS	FDDI CONCENTRATOR	FDDI Concentrator - Bay Networks 2914-04	100,000	0.5	6	5.00	6.50	1	2	standby off-line	0.9999350042	1.0	1.000000000
ISS	FDDI CONCENTRATOR	FDDI Concentrator - Bay Networks 2914-04	100,000	0.5	6	5.00	6.50	2	3	standby off-line	0.9999350042	1.0	1.000000000
ISS	FDDI SWITCH	PowerHub7000 - ALANTEC (4 FDDI cards & 3 pwr supply)	146,000	0.5	6	N/A	6.50	1	1	N/A	0.9999554814	N/A	0.999955481
													###########

EOSD3980 Ao =	0.99987
EOSD3980 MDT =	0.39024

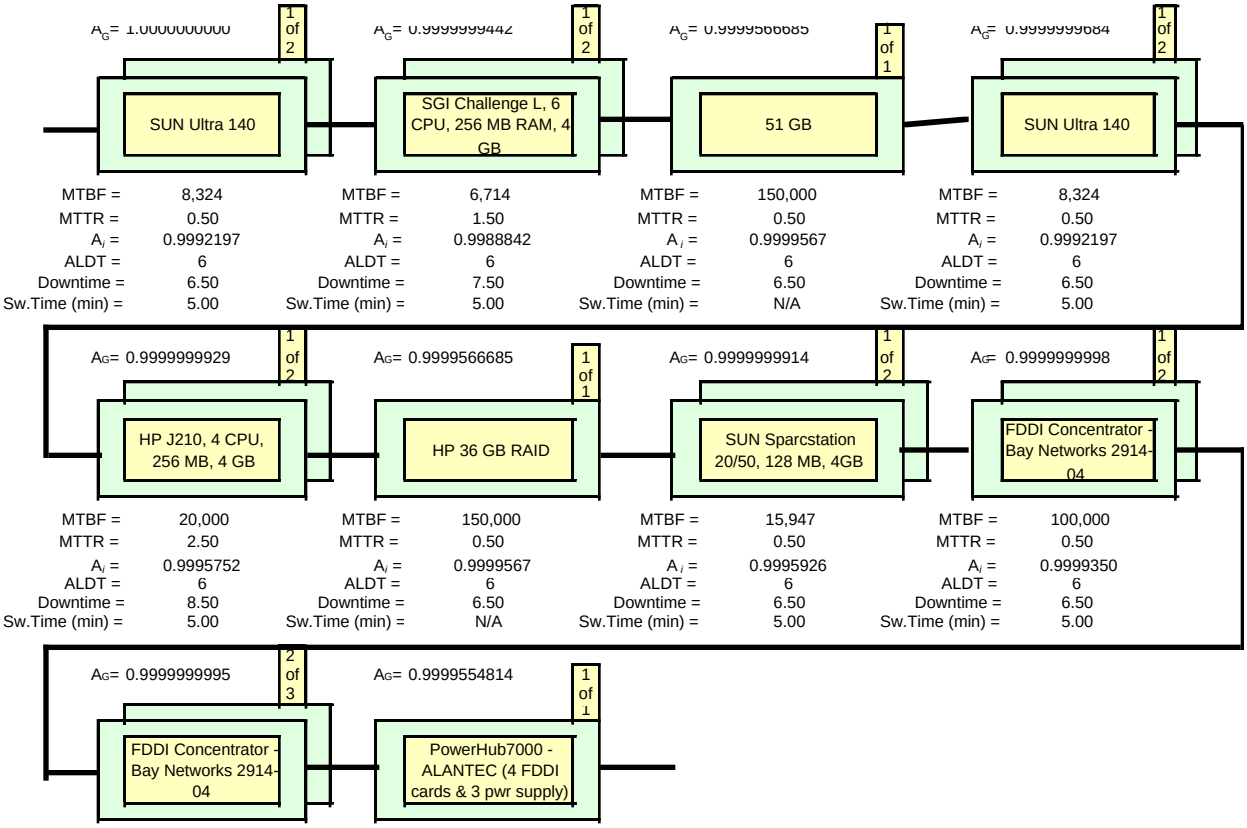

EOSD3990 Ao/MDT Analytical Results for JPL

EOSD3990: Function Of Data Order Submission Across DAACs (Ao<=.96, MDT>=4.0 hrs)

Subsystem Description	Equipment Description	Model/Part Number	MTBF (hour)	MTTR (hour)	Admin. Logistic Delay Time (hour)	Switchover Time (min)	Total Downtime (hour)	Number of Units Required (m)	Total Number Of Units (n)	Redundancy	Unit Availability (Ai)	P	Redundant Group Availability (m out of n)
Data Manag.	DMG SERVER	K400, 2 CPU, 512 MB RAM, 8 GB, 8 mm	22,747	2.7	6	N/A	8.70	1	1	N/A	0.9996176782	N/A	0.999617678
Data Manag.	RAID DISK	HP 10 GB	150,000	0.5	6	N/A	6.50	1	1	N/A	0.9999566685	N/A	0.999956669
Data Manag.	DATA SPECIALIST W/S	SUN Ultra 140	8,324	0.5	6	5.00	6.50	1	3	standby off-line	0.9992197347	1.0	1.000000000
ACM	APC SERVER	SGI Challenge L, 6 CPU, 256 MB RAM, 4 GB	6,714	1.5	6	5.00	7.50	1	2	standby off-line	0.9988841776	1.0	0.999999944
ACM	RAID DISK	51 GB	150,000	0.5	6	N/A	6.50	1	1	N/A	0.9999566685	N/A	0.999956669
ACM	OPS WORKSTATION	SUN Ultra 140	8,324	0.5	6	5.00	6.50	1	2	standby off-line	0.9992197347	1.0	0.999999968
MSS/CSS	MSS/CSS SERVER	HP J210, 4 CPU, 256 MB, 4 GB	20000	2.5	6	5.00	8.50	1	2	standby off-line	0.9995751805	1.0	0.999999993
MSS	RAID	HP 36 GB RAID	150,000	0.5	6	N/A	6.50	1	1	N/A	0.9999566685	N/A	0.999956669
MSS	MSS WS	SUN Sparcstation 20/50, 128 MB, 4GB	15,947	0.5	6	5.00	6.50	1	2	standby off-line	0.9995925659	1.0	0.999999991
ISS	FDDI CONCENTRATOR	FDDI Concentrator - Bay Networks 2914-04	100,000	0.5	6	5.00	6.50	1	2	standby off-line	0.9999350042	1.0	1.000000000
ISS	FDDI CONCENTRATOR	FDDI Concentrator - Bay Networks 2914-04	100,000	0.5	6	5.00	6.50	2	3	standby off-line	0.9999350042	1.0	1.000000000
ISS	FDDI SWITCH	PowerHub7000 - ALANTEC (4 FDDI cards & 3 pwr supply)	146,000	0.5	6	N/A	6.50	1	1	N/A	0.9999554814	N/A	0.999955481
													0.9998687204

EOSD3990 Ao = 0.99987
EOSD3990 MDT = 0.39024

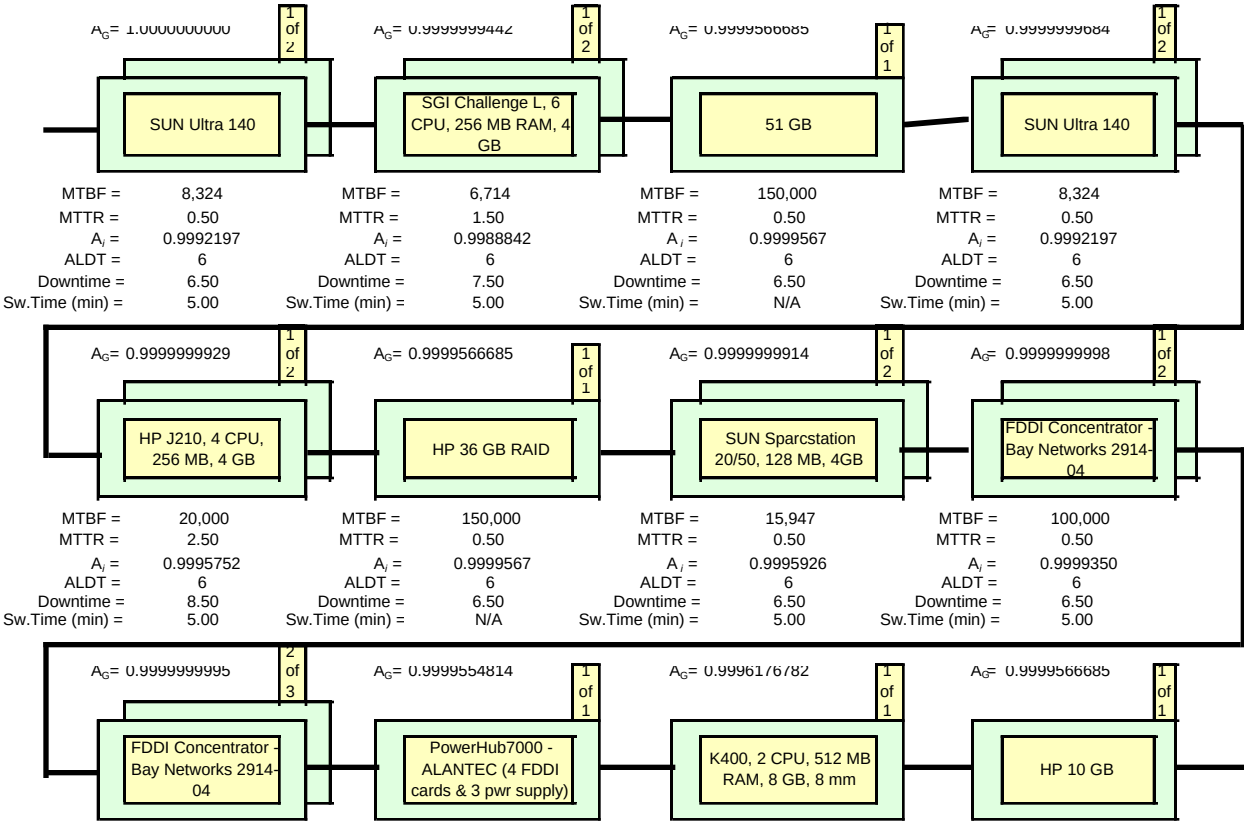

EOSD4000 Ao/MDT Analytical Results for JPL

EOSD4000: Function Of IMS Data Management and Maintenance Interface (Ao>=.96, MDT<=4.0 hrs)

Subsystem Description	Equipment Description	Model/Part Number	MTBF (hour)	MTTR (hour)	Admin. Logistic Delay Time (hour)	Switchover Time (min)	Total Downtime (hour)	Number of Units Required (m)	Total Number Of Units (n)	Redundancy	Unit Availability (Ai)	P	Redundant Group Availability (m out of n)
Data Manag.	DMG SERVER	K400, 2 CPU, 512 MB RAM, 8 GB, 8 mm	22,747	2.7	6	N/A	8.70	1	1	N/A	0.9996176782	N/A	0.999617678
Data Manag.	RAID DISK	HP 10 GB	150,000	0.5	6	N/A	6.50	1	1	N/A	0.9999566685	N/A	0.999956669
Data Manag.	DATA SPECIALIST W/S	SUN Ultra 140	8,324	0.5	6	5.00	6.50	1	3	standby off-line	0.9992197347	1.0	1.000000000
ACM	OPS WORKSTATION	HP C100/110	35,700	2.5	6	5.00	8.50	1	2	standby off-line	0.9997619614	1.0	0.999999998
DRP	DBMS SERVER	SGI Challenge XL, 2 CPU, 256 MB RAM, 6 GB	5,109	1.5	6	5.00	7.50	1	2	standby off-line	0.9985341542	1.0	0.999999904
DRP	RAID DISK	17 GB	150,000	0.5	6	N/A	6.50	1	1	N/A	0.9999566685	N/A	0.999956669
MSS/CSS	MSS/CSS SERVER	HP J210, 4 CPU, 256 MB, 4 GB	20000	2.5	6	5.00	8.50	1	2	standby off-line	0.9995751805	1.0	0.999999993
MSS	RAID	HP 36 GB RAID	150,000	0.5	6	N/A	6.50	1	1	N/A	0.9999566685	N/A	0.999956669
MSS	MSS WS	SUN Sparcstation 20/50, 128 MB, 4GB	15,947	0.5	6	5.00	6.50	1	2	standby off-line	0.9995925659	1.0	0.999999991
ISS	FDDI CONCENTRATOR	FDDI Concentrator - Bay Networks 2914-04	100,000	0.5	6	5.00	6.50	1	2	standby off-line	0.9999350042	1.0	1.000000000
ISS	FDDI CONCENTRATOR	FDDI Concentrator - Bay Networks 2914-04	100,000	0.5	6	5.00	6.50	2	3	standby off-line	0.9999350042	1.0	1.000000000
ISS	FDDI SWITCH	PowerHub7000 - ALANTEC (4 FDDI cards & 3 pwr supply)	146,000	0.5	6	N/A	6.50	1	1	N/A	0.9999554814	N/A	0.999955481
													0.9998687115

EOSD4000 Ao =	0.99987
EOSD4000 MDT =	0.45481

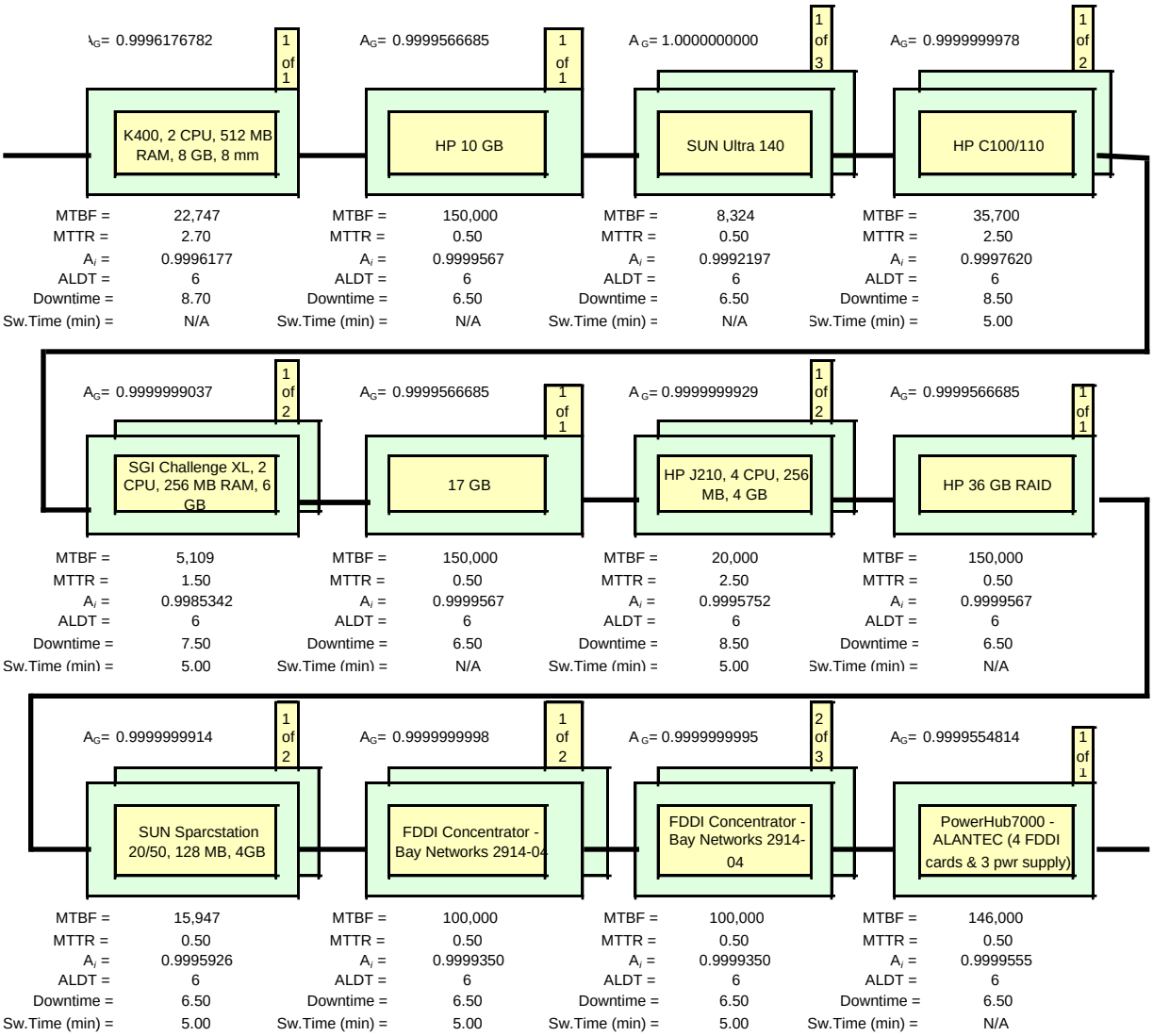
AG= 0.9996176782
1 of 1
K400, 2 CPU, 512 MB RAM, 8 GB, 8 mm
MTBF = 22,747
MTTR = 2.70
Ai = 0.9996177
ALDT = 6
Downtime = 8.70
Sw.Time (min) = N/A
AG= 0.9999566685
1 of 1
HP 10 GB
MTBF = 150,000
MTTR = 0.50
Ai = 0.9999567
ALDT = 6
Downtime = 6.50
Sw.Time (min) = N/A
AG= 1.0000000000
1 of 3
SUN Ultra 140
MTBF = 8,324
MTTR = 0.50
Ai = 0.9992197
ALDT = 6
Downtime = 6.50
Sw.Time (min) = N/A
AG= 0.9999999978
1 of 2
HP C100/110
MTBF = 35,700
MTTR = 2.50
Ai = 0.9997620
ALDT = 6
Downtime = 8.50
Sw.Time (min) = 5.00
AG= 0.9999999037
1 of 2
SGI Challenge XL, 2 CPU, 256 MB RAM, 6 GB
MTBF = 5,109
MTTR = 1.50
Ai = 0.9985342
ALDT = 6
Downtime = 7.50
Sw.Time (min) = 5.00
AG= 0.9999566685
1 of 1
17 GB
MTBF = 150,000
MTTR = 0.50
Ai = 0.9999567
ALDT = 6
Downtime = 6.50
Sw.Time (min) = N/A
AG= 0.9999999929
1 of 2
HP J210, 4 CPU, 256 MB, 4 GB
MTBF = 20,000
MTTR = 2.50
Ai = 0.9995752
ALDT = 6
Downtime = 8.50
Sw.Time (min) = 5.00
AG= 0.9999566685
1 of 1
HP 36 GB RAID
MTBF = 150,000
MTTR = 0.50
Ai = 0.9999567
ALDT = 6
Downtime = 6.50
Sw.Time (min) = N/A
AG= 0.9999999914
1 of 2
SUN Sparcstation 20/50, 128 MB, 4GB
MTBF = 15,947
MTTR = 0.50
Ai = 0.9995926
ALDT = 6
Downtime = 6.50
Sw.Time (min) = 5.00
AG= 0.9999999998
1 of 2
FDDI Concentrator - Bay Networks 2914-04
MTBF = 100,000
MTTR = 0.50
Ai = 0.9999350
ALDT = 6
Downtime = 6.50
Sw.Time (min) = 5.00
AG= 0.9999999995
2 of 3
FDDI Concentrator - Bay Networks 2914-04
MTBF = 100,000
MTTR = 0.50
Ai = 0.9999350
ALDT = 6
Downtime = 6.50
Sw.Time (min) = 5.00
AG= 0.9999554814
1 of 1
PowerHub7000 - ALANTEC (4 FDDI cards & 3 pwr supply)
MTBF = 146,000
MTTR = 0.50
Ai = 0.9999555
ALDT = 6
Downtime = 6.50
Sw.Time (min) = N/A

EOSD 3920 Ao/MDT Analytical Results for ORNL

EOSD3920:Function of Archiving And Distributing Data (Ao>=.980, MDT<=2.0 hrs)

Subsystem Description	Equipment Description	Model/Part Number	MTBF (hour)	MTTR (hour)	Admin. Logistic Delay Time (hour)	Switch over Time (min)	Total Downtime (hour)	Number of Units Required (m)	Total Number Of Units (n)	Redundancy	Unit Availability (Ai)	P	Redundant Group Availability (m out of n)
ACM	APC SERVER	SGI Challenge XL, 6 CPU, 512 MB RAM, 6 GB	4,290	1.5	6	5.00	7.50	1	2	standby off-line	0.9982547993	1.0	0.999999864
ACM	RAID DISK	161 GB	150,000	0.5	6	N/A	6.50	2	2	N/A	0.9999566685	N/A	0.999913341
ACM	OPS WORKSTATION	SUN Sparcstation 20/50, 128 MB, 4GB	15,947	0.5	6	5.00	6.50	1	2	standby off-line	0.9995925659	1.0	0.999999991
DRP	DBMS SERVER	SGI Challenge XL, 2 CPU, 256 MB RAM, 6 GB	5,109	1.5	6	5.00	7.50	1	2	standby off-line	0.9985341542	1.0	0.999999904
DRP	RAID DISK	17 GB	150,000	0.5	6	N/A	6.50	1	1	N/A	0.9999566685	N/A	0.999956669
DDS	DOCUMENT SERVER	SUN Sparc 20/712, 256 MB RAM, 8 GB	3,752	0.5	6	5.00	6.50	1	2	standby off-line	0.9982705867	1.0	0.999999845
DDS	DOCUMENT SVR RAID	10GB	150,000	0.5	6	N/A	6.50	1	1	N/A	0.9999566685	N/A	0.999956669
MSS/CSS	MSS/CSS SERVER	HP J210, 4 CPU, 384 MB, 4 GB	20000	2.5	6	5.00	8.50	1	2	standby off-line	0.9995751805	1.0	0.999999993
MSS	RAID	HP 28 GB RAID	150,000	0.5	6	N/A	6.50	1	1	N/A	0.9999566685	N/A	0.999956669
MSS	MSS WS	SUN Sparcstation 20/50, 128 MB, 4GB	15,947	0.5	6	5.00	6.50	1	2	standby off-line	0.9995925659	1.0	0.999999991
ISS	FDDI CONCENTRATOR	FDDI Concentrator - Bay Networks 2914-04	100,000	0.5	6	5.00	6.50	1	2	standby off-line	0.9999350042	1.0	1.000000000
ISS	FDDI CONCENTRATOR	FDDI Concentrator - Bay Networks 2914-04	100,000	0.5	6	5.00	6.50	2	3	standby off-line	0.9999350042	1.0	1.000000000
ISS	FDDI SWITCH	PowerHub7000 - ALANTEC (4 FDDI cards & 3 pwr supply)	146,000	0.5	6	N/A	6.50	1	1	N/A	0.9999554814	N/A	0.999955481
													0.9997384420
		EOSD3920 Ao =	0.99974										
		EOSD3920 MDT =	0.31601										

EOSD 3920 Ao/MDT Analytical Results for ORNL (continued)

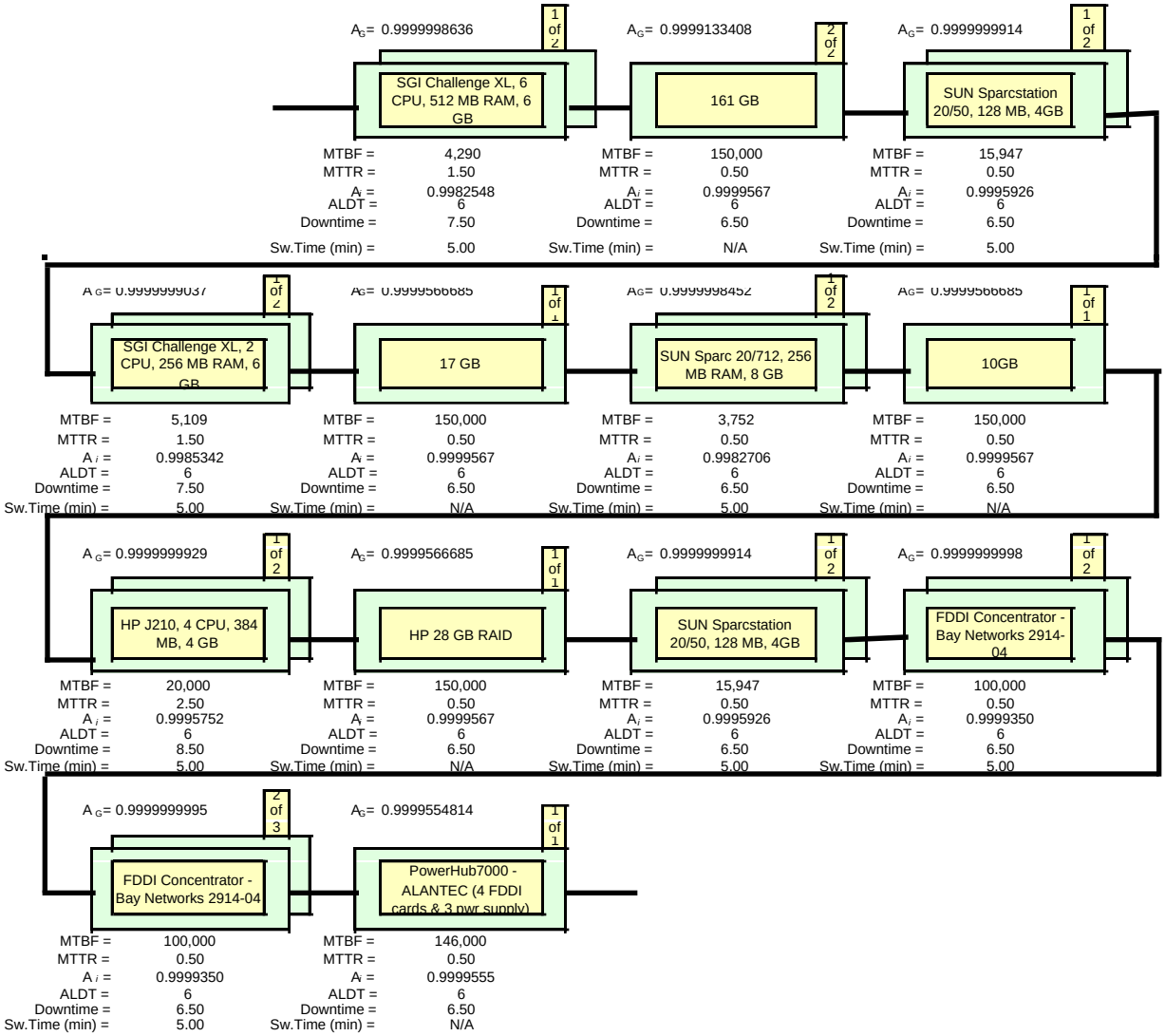

EOSD 3930 Ao/MDT Analytical Results for ORNL

EOSD3930: User Interfaces to IMS Services at Individual DAAC Site (Ao>=.993, MDT<=2.0 hrs)

Subsystem Description	Equipment Description	Model/Part Number	MTBF (hour)	MTTR (hour)	Admin. Logistic Delay Time (hour)	Switch over Time (min)	Total Downtime (hour)	Number of Units Required (m)	Total Number Of Units (n)	Redundancy	Unit Availability (Ai)	P	Redundant Group Availability (m out of n)
Data Manag.	DMG SERVER	K400, 2 CPU, 512 MB RAM, 8 GB, 8 mm	22,747	2.7	6	N/A	8.70	1	1	N/A	0.9996176782	N/A	0.999617678
Data Manag.	RAID DISK	HP 10 GB	150,000	0.5	6	N/A	6.50	1	1	N/A	0.9999566685	N/A	0.999956669
Data Manag.	DBA OPS WORKSTATION	HP C100, 64 MB RAM, 6 GB	35,700	2.5	6	N/A	8.50	1	1	N/A	0.9997619614	N/A	0.999761961
ACM	APC SERVER	SGI Challenge XL, 6 CPU, 512 MB RAM, 6 GB	4,290	1.5	6	5.00	7.50	1	2	standby off-line	0.9982547993	1.0	0.999999864
ACM	RAID DISK	161 GB	150,000	0.5	6	N/A	6.50	1	1	N/A	0.9999566685	N/A	0.999956669
ACM	OPS WORKSTATION	SUN Sparcstation 20/50, 128 MB, 4GB	15,947	0.5	6	5.00	6.50	1	2	standby off-line	0.9995925659	1.0	0.999999991
DRP	DBMS SERVER	SGI Challenge XL, 2 CPU, 256 MB RAM, 6 GB	5,109	1.5	6	5.00	7.50	1	2	standby off-line	0.9985341542	1.0	0.999999904
DRP	RAID DISK	17 GB	150,000	0.5	6	N/A	6.50	1	1	N/A	0.9999566685	N/A	0.999956669
MSS/CSS	MSS/CSS SERVER	HP J210, 4 CPU, 256 MB, 4 GB	20000	2.5	6	5.00	8.50	1	2	standby off-line	0.9995751805	1.0	0.999999993
MSS	RAID	HP 28 GB RAID	150,000	0.5	6	N/A	6.50	1	1	N/A	0.9999566685	N/A	0.999956669
MSS	MSS WS	SUN Sparcstation 20/50, 128 MB, 4GB	15,947	0.5	6	5.00	6.50	1	2	standby off-line	0.9995925659	1.0	0.999999991
ISS	FDDI CONCENTRATOR	FDDI Concentrator - Bay Networks 2914-04	100,000	0.5	6	5.00	6.50	1	2	standby off-line	0.9999350042	1.0	1.000000000
ISS	FDDI CONCENTRATOR	FDDI Concentrator - Bay Networks 2914-04	100,000	0.5	6	5.00	6.50	2	3	standby off-line	0.9999350042	1.0	1.000000000
ISS	FDDI SWITCH	PowerHub7000 - ALANTEC (4 FDDI cards & 3 pwr supply)	146,000	0.5	6	N/A	6.50	1	1	N/A	0.9999554814	N/A	0.999955481
													0.9998252408
		EOSD3930 Ao =	0.99983										
		EOSD3930 MDT =	0.34794										

EOSD 3930 Ao/MDT Analytical Results for ORNL (continued)

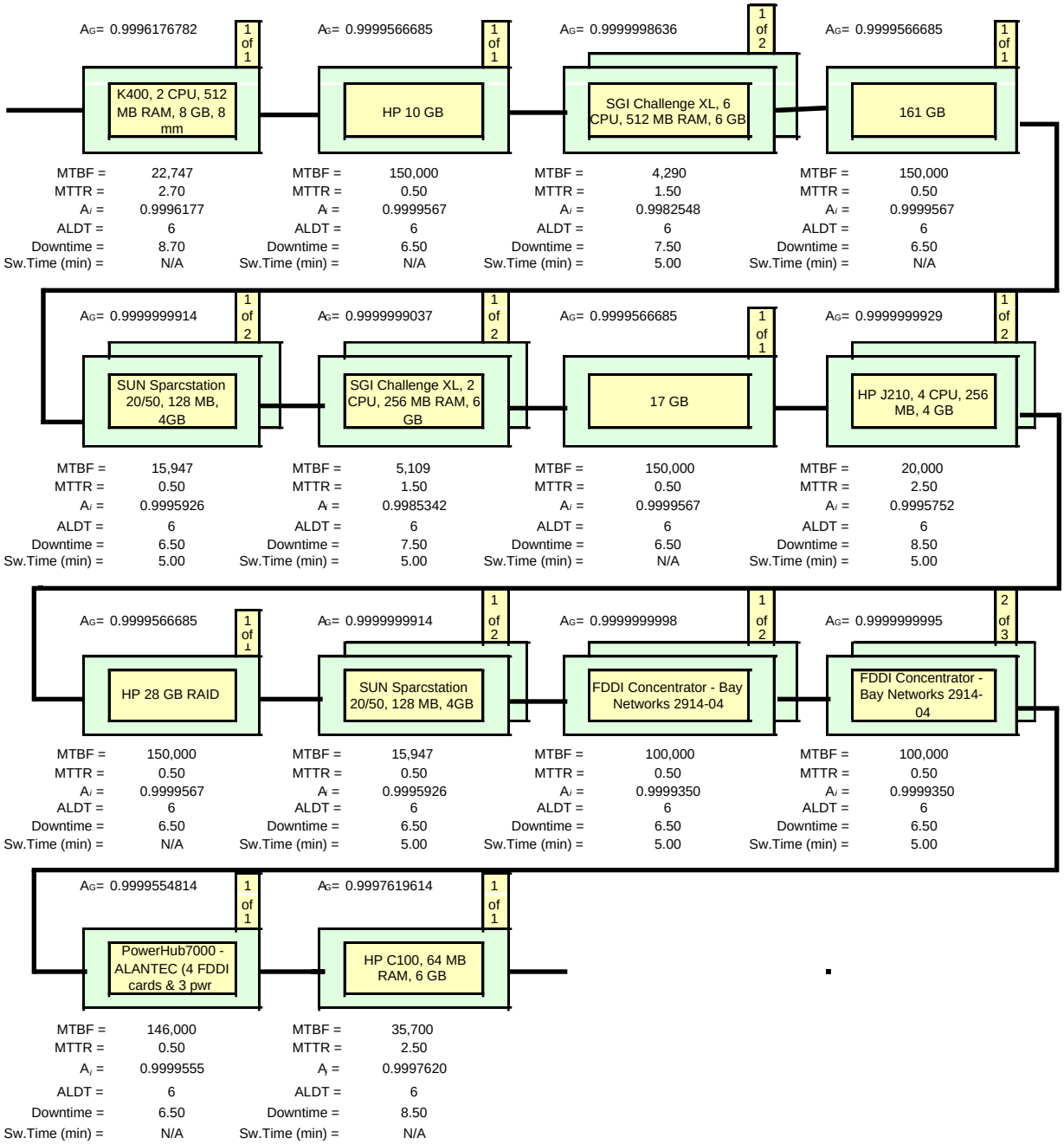

EOSD 3940 Ao/MDT Analytical Results for ORNL

EOSD3940: Function Of Information Searches On The ECS Directory(Ao>=.993, MDT<=2.0 hrs)

Subsystem Description	Equipment Description	Model/Part Number	MTBF (hour)	MTTR (hour)	Admin. Logistic Delay Time (hour)	Switchover Time (min)	Total Downtime (hour)	Number of Units Required (m)	Total Number Of Units (n)	Redundancy	Unit Availability (Ai)	P	Redundant Group Availability (m out of n)
Data Manag.	DMG SERVER	K400, 2 CPU, 512 MB RAM, 8 GB, 8 mm	22,747	2.7	6	N/A	8.70	1	1	N/A	0.9996176782	N/A	0.999617678
Data Manag.	RAID DISK	HP 10 GB	150,000	0.5	6	N/A	6.50	1	1	N/A	0.9999566685	N/A	0.999956669
Data Manag.	DBA OPS WORKSTATION	HP C100, 64 MB RAM, 6 GB	35,700	2.5	6	N/A	8.50	1	1	N/A	0.9997619614	N/A	0.999761961
ACM	APC SERVER	SGI Challenge XL, 6 CPU, 512 MB RAM, 6 GB	4,290	1.5	6	5.00	7.50	1	2	standby off-line	0.9982547993	1.0	0.999999864
ACM	RAID DISK	161 GB	150,000	0.5	6	N/A	6.50	1	1	N/A	0.9999566685	N/A	0.999956669
ACM	OPS WORKSTATION	SUN Sparcstation 20/50, 128 MB, 4GB	15,947	0.5	6	5.00	6.50	1	2	standby off-line	0.9995925659	1.0	0.999999991
MSS/CSS	MSS/CSS SERVER	HP J210, 4 CPU, 256 MB, 4 GB	20000	2.5	6	5.00	8.50	1	2	standby off-line	0.9995751805	1.0	0.999999993
MSS	RAID	HP 28 GB RAID	150,000	0.5	6	N/A	6.50	1	1	N/A	0.9999566685	N/A	0.999956669
MSS	MSS WS	SUN Sparcstation 20/50, 128 MB, 4GB	15,947	0.5	6	5.00	6.50	1	2	standby off-line	0.9995925659	1.0	0.999999991
ISS	FDDI CONCENTRATOR	FDDI Concentrator - Bay Networks 2914-04	100,000	0.5	6	5.00	6.50	1	2	standby off-line	0.9999350042	1.0	1.000000000
ISS	FDDI CONCENTRATOR	FDDI Concentrator - Bay Networks 2914-04	100,000	0.5	6	5.00	6.50	2	3	standby off-line	0.9999350042	1.0	1.000000000
ISS	FDDI SWITCH	PowerHub7000 - ALANTEC (4 FDDI cards & 3 pwr supply)	146,000	0.5	6	N/A	6.50	1	1	N/A	0.9999554814	N/A	0.999955481
													0.9998686628
		EOSD3940 Ao =	0.99987										
		EOSD3940 MDT =	0.37196										

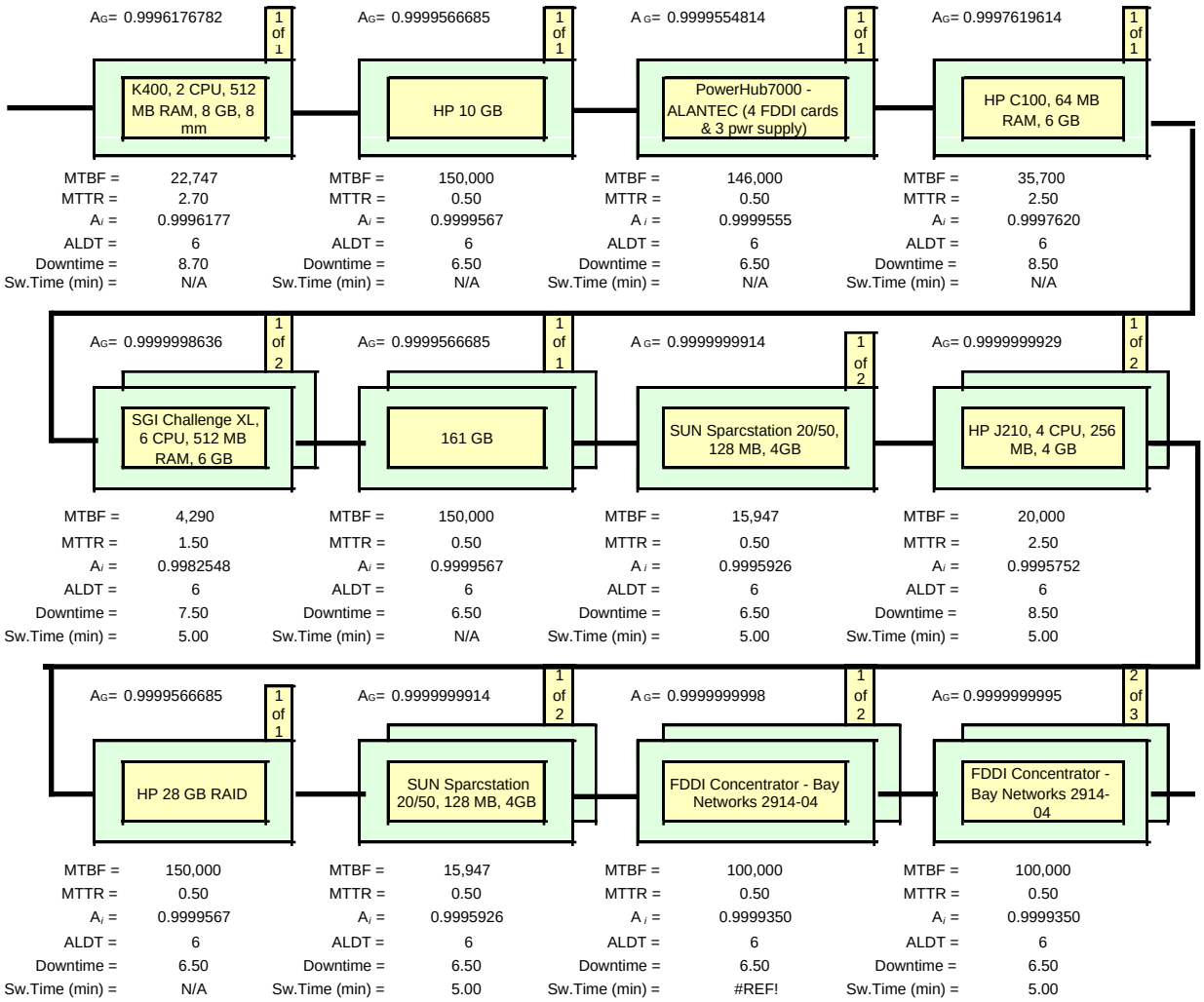
AG= 0.9996176782
1 of 1
K400, 2 CPU, 512 MB RAM, 8 GB, 8 mm
MTBF = 22,747
MTTR = 2.70
Ai = 0.9996177
ALDT = 6
Downtime = 8.70
Sw.Time (min) = N/A
AG= 0.9999566685
1 of 1
HP 10 GB
MTBF = 150,000
MTTR = 0.50
Ai = 0.9999567
ALDT = 6
Downtime = 6.50
Sw.Time (min) = N/A
AG= 0.9999554814
1 of 1
PowerHub7000 - ALANTEC (4 FDDI cards & 3 pwr supply)
MTBF = 146,000
MTTR = 0.50
Ai = 0.9999555
ALDT = 6
Downtime = 6.50
Sw.Time (min) = N/A
AG= 0.9997619614
1 of 1
HP C100, 64 MB RAM, 6 GB
MTBF = 35,700
MTTR = 2.50
Ai = 0.9997620
ALDT = 6
Downtime = 8.50
Sw.Time (min) = N/A
AG= 0.9999998636
1 of 2
SGI Challenge XL, 6 CPU, 512 MB RAM, 6 GB
MTBF = 4,290
MTTR = 1.50
Ai = 0.9982548
ALDT = 6
Downtime = 7.50
Sw.Time (min) = 5.00
AG= 0.9999566685
1 of 1
161 GB
MTBF = 150,000
MTTR = 0.50
Ai = 0.9999567
ALDT = 6
Downtime = 6.50
Sw.Time (min) = N/A
AG= 0.9999999914
1 of 2
SUN Sparcstation 20/50, 128 MB, 4GB
MTBF = 15,947
MTTR = 0.50
Ai = 0.9995926
ALDT = 6
Downtime = 6.50
Sw.Time (min) = 5.00
AG= 0.9999999929
1 of 2
HP J210, 4 CPU, 256 MB, 4 GB
MTBF = 20,000
MTTR = 2.50
Ai = 0.9995752
ALDT = 6
Downtime = 8.50
Sw.Time (min) = 5.00
AG= 0.9999566685
1 of 1
HP 28 GB RAID
MTBF = 150,000
MTTR = 0.50
Ai = 0.9999567
ALDT = 6
Downtime = 6.50
Sw.Time (min) = N/A
AG= 0.9999999914
1 of 2
SUN Sparcstation 20/50, 128 MB, 4GB
MTBF = 15,947
MTTR = 0.50
Ai = 0.9995926
ALDT = 6
Downtime = 6.50
Sw.Time (min) = 5.00
AG= 0.9999999998
1 of 2
FDDI Concentrator - Bay Networks 2914-04
MTBF = 100,000
MTTR = 0.50
Ai = 0.9999350
ALDT = 6
Downtime = 6.50
Sw.Time (min) = #REF!
AG= 0.9999999995
2 of 3
FDDI Concentrator - Bay Networks 2914-04
MTBF = 100,000
MTTR = 0.50
Ai = 0.9999350
ALDT = 6
Downtime = 6.50
Sw.Time (min) = 5.00

EOSD 3960 Ao/MDT Analytical Results for ORNL

EOSD3960:Function Of MetaData Ingest and Update (Ao>=.96, MDT<=4.0 hrs)

Subsystem Description	Equipment Description	Model/Part Number	MTBF (hour)	MTTR (hour)	Admin. Logistic Delay Time (hour)	Switchover Time (min)	Total Downtime (hour)	Number of Units Required (m)	Total Number Of Units (n)	Redundancy	Unit Availability (Ai)	P	Redundant Group Availability (m out of n)
Data Manag.	DATA SPECIALIST W/S	SUN Utra 140, 64MB RAM, 6GB	8,324	0.5	6	5.00	6.50	1	2	standby off-line	0.9992197347	1.0	0.999999968
ACM	APC SERVER	SGI Challenge XL, 6 CPU, 512 MB RAM, 6 GB	4,290	1.5	6	5.00	7.50	1	2	standby off-line	0.9982547993	1.0	0.999999864
ACM	RAID DISK	161 GB	150,000	0.5	6	N/A	6.50	1	1	N/A	0.9999566685	N/A	0.999956669
ACM	OPS WORKSTATION	SUN Sparcstation 20/50, 128 MB, 4GB	15,947	0.5	6	5.00	6.50	1	2	standby off-line	0.9995925659	1.0	0.999999991
DRP	DBMS SERVER	SGI Challenge XL, 2 CPU, 256 MB RAM, 6 GB	5,109	1.5	6	5.00	7.50	1	2	standby off-line	0.9985341542	1.0	0.999999904
DRP	RAID DISK	17 GB	150,000	0.5	6	N/A	6.50	1	1	N/A	0.9999566685	N/A	0.999956669
MSS/CSS	MSS/CSS SERVER	HP J210, 4 CPU, 256 MB, 4 GB	20000	2.5	6	5.00	8.50	1	2	standby off-line	0.9995751805	1.0	0.999999993
MSS	RAID	HP 28 GB RAID	150,000	0.5	6	N/A	6.50	1	1	N/A	0.9999566685	N/A	0.999956669
MSS	MSS WS	SUN Sparcstation 20/50, 128 MB, 4GB	15,947	0.5	6	5.00	6.50	1	2	standby off-line	0.9995925659	1.0	0.999999991
ISS	FDDI CONCENTRATOR	FDDI Concentrator - Bay Networks 2914-04	100,000	0.5	6	5.00	6.50	1	2	standby off-line	0.9999350042	1.0	1.000000000
ISS	FDDI CONCENTRATOR	FDDI Concentrator - Bay Networks 2914-04	100,000	0.5	6	5.00	6.50	2	3	standby off-line	0.9999350042	1.0	1.000000000
ISS	FDDI SWITCH	PowerHub7000 - ALANTEC (4 FDDI cards & 3 pwr supply)	146,000	0.5	6	N/A	6.50	1	1	N/A	0.9999554814	N/A	0.999955481
													0.9998252408
		EOSD3960 Ao =	0.99983										
		EOSD3960 MDT =	0.34794										

EOSD 3960 Ao/MDT Analytical Results for ORNL (continued)

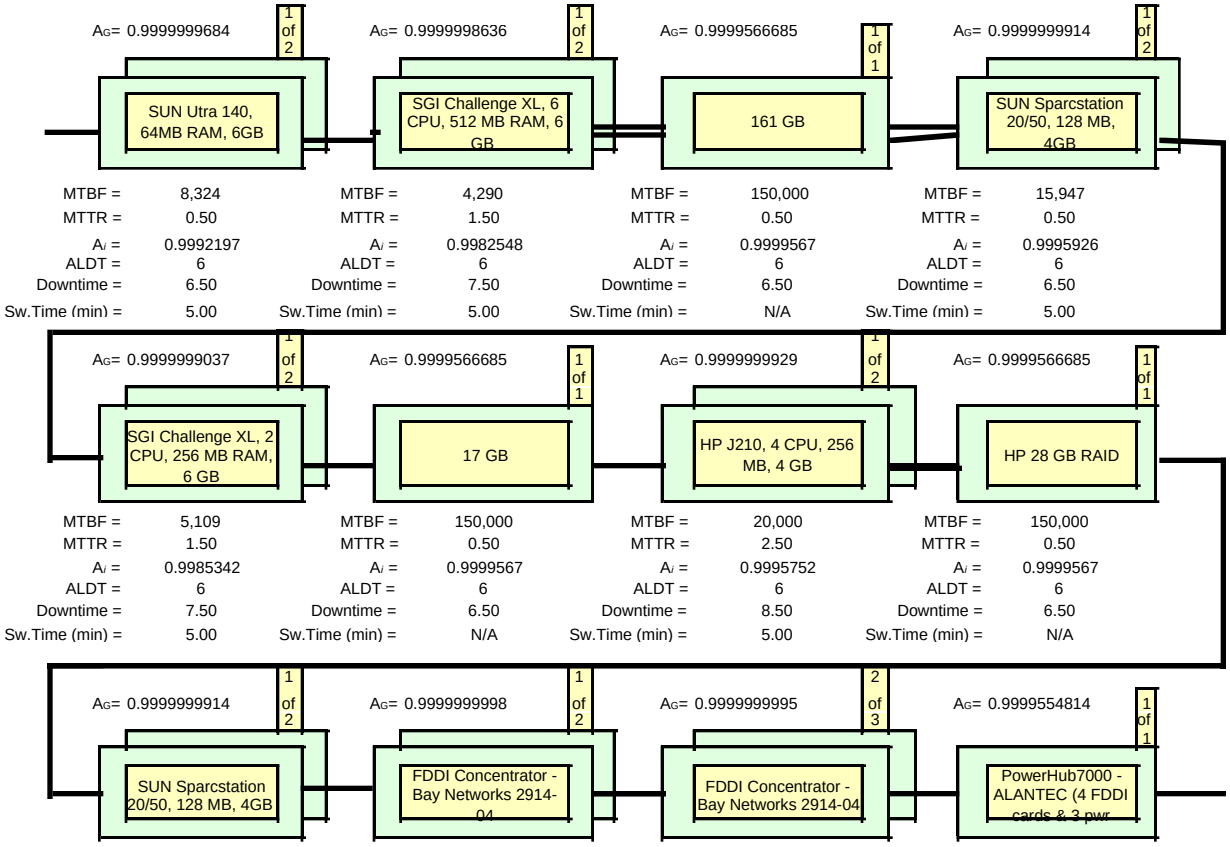

EOSD 3970 Ao/MDT Analytical Results for ORNL

EOSD3970: Function Of Info. Searches On Local Holdings (Ao>=.96, MDT<=4.0 hrs)

Subsystem Description	Equipment Description	Model/Part Number	MTBF (hour)	MTTR (hour)	Admin. Logistic Delay Time (hour)	Switch over Time (min)	Total Downtime (hour)	Number of Units Required (m)	Total Number Of Units (n)	Redundancy	Unit Availability (Ai)	P	Redundant Group Availability (m out of n)
ACM	APC SERVER	SGI Challenge XL, 6 CPU, 512 MB RAM, 6 GB	4,290	1.5	6	5.00	7.50	1	2	standby off-line	0.9982547993	1.0	0.999999864
ACM	RAID DISK	161 GB	150,000	0.5	6	N/A	6.50	1	1	N/A	0.9999566685	N/A	0.999956669
ACM	OPS WORKSTATION	SUN Sparcstation 20/50, 128 MB, 4GB	15,947	0.5	6	5.00	6.50	1	2	standby off-line	0.9995925659	1.0	0.999999991
DRP	DBMS SERVER	SGI Challenge XL, 2 CPU, 256 MB RAM, 6 GB	5,109	1.5	6	5.00	7.50	1	2	standby off-line	0.9985341542	1.0	0.999999904
DRP	RAID DISK	17 GB	150,000	0.5	6	N/A	6.50	1	1	N/A	0.9999566685	N/A	0.999956669
MSS/CSS	MSS/CSS SERVER	HP J210, 4 CPU, 256 MB, 4 GB	20000	2.5	6	5.00	8.50	1	2	standby off-line	0.9995751805	1.0	0.999999993
MSS	RAID	HP 28 GB RAID	150,000	0.5	6	N/A	6.50	1	1	N/A	0.9999566685	N/A	0.999956669
MSS	MSS WS	SUN Sparcstation 20/50, 128 MB, 4GB	15,947	0.5	6	5.00	6.50	1	2	standby off-line	0.9995925659	1.0	0.999999991
ISS	FDDI CONCENTRATOR	FDDI Concentrator - Bay Networks 2914-04	100,000	0.5	6	5.00	6.50	1	2	standby off-line	0.9999350042	1.0	1.000000000
ISS	FDDI CONCENTRATOR	FDDI Concentrator - Bay Networks 2914-04	100,000	0.5	6	5.00	6.50	2	3	standby off-line	0.9999350042	1.0	1.000000000
ISS	FDDI SWITCH	PowerHub7000 - ALANTEC (4 FDDI cards & 3 pwr supply)	146,000	0.5	6	N/A	6.50	1	1	N/A	0.9999554814	N/A	0.999955481
													0.9998252408
		EOSD3970 Ao =	0.99983										
		EOSD3970 MDT =	0.34794										

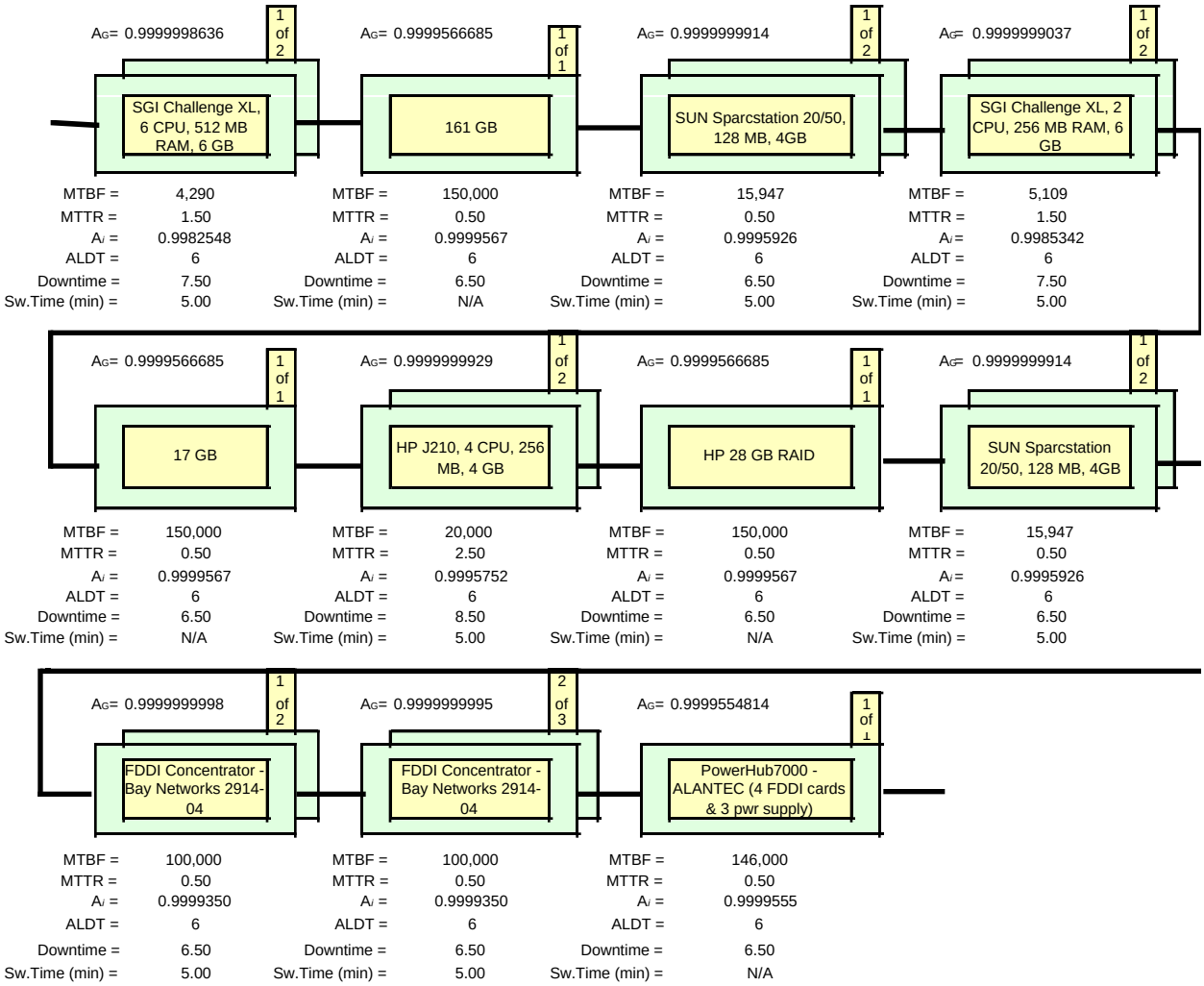
AG= 0.9999998636
1 of 2
SGI Challenge XL, 6 CPU, 512 MB RAM, 6 GB
MTBF = 4,290
MTTR = 1.50
Ai = 0.9982548
ALDT = 6
Downtime = 7.50
Sw.Time (min) = 5.00
AG= 0.9999566685
1 of 1
161 GB
MTBF = 150,000
MTTR = 0.50
Ai = 0.9999567
ALDT = 6
Downtime = 6.50
Sw.Time (min) = N/A
AG= 0.9999999914
1 of 2
SUN Sparcstation 20/50, 128 MB, 4GB
MTBF = 15,947
MTTR = 0.50
Ai = 0.9995926
ALDT = 6
Downtime = 6.50
Sw.Time (min) = 5.00
AG= 0.9999999037
1 of 2
SGI Challenge XL, 2 CPU, 256 MB RAM, 6 GB
MTBF = 5,109
MTTR = 1.50
Ai = 0.9985342
ALDT = 6
Downtime = 7.50
Sw.Time (min) = 5.00
AG= 0.9999566685
1 of 1
17 GB
MTBF = 150,000
MTTR = 0.50
Ai = 0.9999567
ALDT = 6
Downtime = 6.50
Sw.Time (min) = N/A
AG= 0.9999999929
1 of 2
HP J210, 4 CPU, 256 MB, 4 GB
MTBF = 20,000
MTTR = 2.50
Ai = 0.9995752
ALDT = 6
Downtime = 8.50
Sw.Time (min) = 5.00
AG= 0.9999566685
1 of 1
HP 28 GB RAID
MTBF = 150,000
MTTR = 0.50
Ai = 0.9999567
ALDT = 6
Downtime = 6.50
Sw.Time (min) = N/A
AG= 0.9999999914
1 of 2
SUN Sparcstation 20/50, 128 MB, 4GB
MTBF = 15,947
MTTR = 0.50
Ai = 0.9995926
ALDT = 6
Downtime = 6.50
Sw.Time (min) = 5.00
AG= 0.9999999998
1 of 2
FDDI Concentrator - Bay Networks 2914-04
MTBF = 100,000
MTTR = 0.50
Ai = 0.9999350
ALDT = 6
Downtime = 6.50
Sw.Time (min) = 5.00
AG= 0.9999999995
2 of 3
FDDI Concentrator - Bay Networks 2914-04
MTBF = 100,000
MTTR = 0.50
Ai = 0.9999350
ALDT = 6
Downtime = 6.50
Sw.Time (min) = 5.00
AG= 0.9999554814
1 of 1
PowerHub7000 - ALANTEC (4 FDDI cards & 3 pwr supply)
MTBF = 146,000
MTTR = 0.50
Ai = 0.9999555
ALDT = 6
Downtime = 6.50
Sw.Time (min) = N/A

EOSD 3980 Ao/MDT Analytical Results for ORNL

EOSD3980: Function Of Local Data Order Submission (Ao>=.96, MDT<=4.0 hrs)

Subsystem Description	Equipment Description	Model/Part Number	MTBF (hour)	MTTR (hour)	Admin. Logistic Delay Time (hour)	Switchover Time (min)	Total Downtime (hour)	Number of Units Required (m)	Total Number Of Units (n)	Redundancy	Unit Availability (Ai)	P	Redundant Group Availability (m out of n)
Data Manag.	DATA SPECIALIST W/S	SUN Utra 140, 64MB RAM, 6GB	8,324	0.5	6	5.00	6.50	1	2	standby off-line	0.9992197347	1.0	0.999999968
ACM	APC SERVER	SGI Challenge XL, 6 CPU, 512 MB RAM, 6 GB	4,290	1.5	6	5.00	7.50	1	2	standby off-line	0.9982547993	1.0	0.999999864
ACM	RAID DISK	161 GB	150,000	0.5	6	N/A	6.50	1	1	N/A	0.9999566685	N/A	0.999956669
ACM	OPS WORKSTATION	SUN Sparcstation 20/50, 128 MB, 4GB	15,947	0.5	6	5.00	6.50	1	2	standby off-line	0.9995925659	1.0	0.999999991
MSS/CSS	MSS/CSS SERVER	HP J210, 4 CPU, 256 MB, 4 GB	20000	2.5	6	5.00	8.50	1	2	standby off-line	0.9995751805	1.0	0.999999993
MSS	RAID	HP 28 GB RAID	150,000	0.5	6	N/A	6.50	1	1	N/A	0.9999566685	N/A	0.999956669
MSS	MSS WS	SUN Sparcstation 20/50, 128 MB, 4GB	15,947	0.5	6	5.00	6.50	1	2	standby off-line	0.9995925659	1.0	0.999999991
ISS	FDDI CONCENTRATOR	FDDI Concentrator - Bay Networks 2914-04	100,000	0.5	6	5.00	6.50	1	2	standby off-line	0.9999350042	1.0	1.000000000
ISS	FDDI CONCENTRATOR	FDDI Concentrator - Bay Networks 2914-04	100,000	0.5	6	5.00	6.50	2	3	standby off-line	0.9999350042	1.0	1.000000000
ISS	FDDI SWITCH	PowerHub7000 - ALANTEC (4 FDDI cards & 3 pwr supply)	146,000	0.5	6	N/A	6.50	1	1	N/A	0.9999554814	N/A	0.999955481
													0.9998686628

EOSD3980 Ao =	0.99987
EOSD3980 MDT =	0.37196

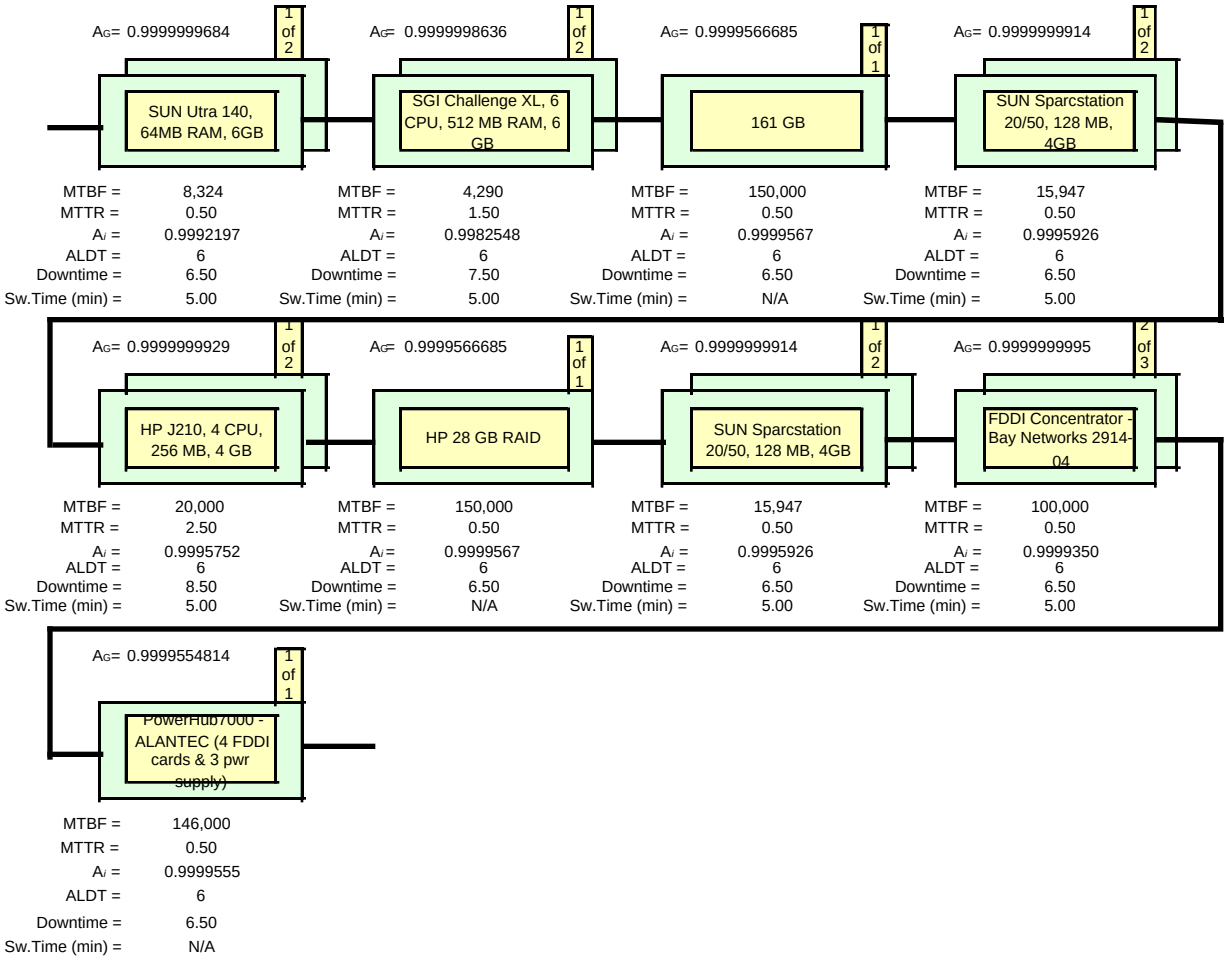
AG= 0.9999999684
1 of 2
SUN Utra 140, 64MB RAM, 6GB
MTBF = 8,324
MTTR = 0.50
Ai = 0.9992197
ALDT = 6
Downtime = 6.50
Sw.Time (min) = 5.00
AG= 0.9999998636
1 of 2
SGI Challenge XL, 6 CPU, 512 MB RAM, 6 GB
MTBF = 4,290
MTTR = 1.50
Ai = 0.9982548
ALDT = 6
Downtime = 7.50
Sw.Time (min) = 5.00
AG= 0.9999566685
1 of 1
161 GB
MTBF = 150,000
MTTR = 0.50
Ai = 0.9999567
ALDT = 6
Downtime = 6.50
Sw.Time (min) = N/A
AG= 0.9999999914
1 of 2
SUN Sparcstation 20/50, 128 MB, 4GB
MTBF = 15,947
MTTR = 0.50
Ai = 0.9995926
ALDT = 6
Downtime = 6.50
Sw.Time (min) = 5.00
AG= 0.9999999929
1 of 2
HP J210, 4 CPU, 256 MB, 4 GB
MTBF = 20,000
MTTR = 2.50
Ai = 0.9995752
ALDT = 6
Downtime = 8.50
Sw.Time (min) = 5.00
AG= 0.9999566685
1 of 1
HP 28 GB RAID
MTBF = 150,000
MTTR = 0.50
Ai = 0.9999567
ALDT = 6
Downtime = 6.50
Sw.Time (min) = N/A
AG= 0.9999999914
1 of 2
SUN Sparcstation 20/50, 128 MB, 4GB
MTBF = 15,947
MTTR = 0.50
Ai = 0.9995926
ALDT = 6
Downtime = 6.50
Sw.Time (min) = 5.00
AG= 0.9999999995
2 of 3
FDDI Concentrator - Bay Networks 2914-04
MTBF = 100,000
MTTR = 0.50
Ai = 0.9999350
ALDT = 6
Downtime = 6.50
Sw.Time (min) = 5.00
AG= 0.9999554814
1 of 1
PowerHub7000 - ALANTEC (4 FDDI cards & 3 pwr supply)
MTBF = 146,000
MTTR = 0.50
Ai = 0.9999555
ALDT = 6
Downtime = 6.50
Sw.Time (min) = N/A

EOSD 3990 Ao/MDT Analytical Results for ORNL

EOSD3990: Function Of Data Order Submission Across DAACs (Ao<=.96, MDT>=4.0 hrs)

Subsystem Description	Equipment Description	Model/Part Number	MTBF (hour)	MTTR (hour)	Admin. Logistic Delay Time (hour)	Switchover Time (min)	Total Downtime (hour)	Number of Units Required (m)	Total Number Of Units (n)	Redundancy	Unit Availability (Ai)	P	Redundant Group Availability (m out of n)
Data Manag.	DMG SERVER	K400, 2 CPU, 512 MB RAM, 8 GB, 8 mm	22,747	2.7	6	N/A	8.70	1	1	N/A	0.9996176782	N/A	0.999617678
Data Manag.	RAID DISK	HP 10 GB	150,000	0.5	6	N/A	6.50	1	1	N/A	0.9999566685	N/A	0.999956669
Data Manag.	DATA SPECIALIST W/S	SUN Utra 140, 64MB RAM, 6GB	8,324	0.5	6	5.00	6.50	1	2	standby off-line	0.9992197347	1.0	0.999999968
ACM	APC SERVER	SGI Challenge L, 4 CPU, 256 MB RAM, 4 GB	6,714	1.5	6	5.00	7.50	1	2	standby off-line	0.9988841776	1.0	0.999999944
ACM	RAID DISK	360 GB	150,000	0.5	6	N/A	6.50	1	1	N/A	0.9999566685	N/A	0.999956669
ACM	OPS WORKSTATION	SUN Utra 140, 64MB RAM, 6GB	8,324	0.5	6	5.00	6.50	1	2	standby off-line	0.9992197347	1.0	0.999999968
MSS/CSS	MSS/CSS SERVER	HP J210, 4 CPU, 256 MB, 4 GB	20000	2.5	6	5.00	8.50	1	2	standby off-line	0.9995751805	1.0	0.999999993
MSS	RAID	HP 28 GB RAID	150,000	0.5	6	N/A	6.50	1	1	N/A	0.9999566685	N/A	0.999956669
MSS	MSS WS	SUN Sparcstation 20/50, 128 MB, 4GB	15,947	0.5	6	5.00	6.50	1	2	standby off-line	0.9995925659	1.0	0.999999991
ISS	FDDI CONCENTRATOR	FDDI Concentrator - Bay Networks 2914-04	100,000	0.5	6	5.00	6.50	1	2	standby off-line	0.9999350042	1.0	1.000000000
ISS	FDDI CONCENTRATOR	FDDI Concentrator - Bay Networks 2914-04	100,000	0.5	6	5.00	6.50	2	3	standby off-line	0.9999350042	1.0	1.000000000
ISS	FDDI SWITCH	PowerHub7000 - ALANTEC (4 FDDI cards & 3 pwr supply)	146,000	0.5	6	N/A	6.50	1	1	N/A	0.9999554814	N/A	0.999955481
													0.9998687204
		EOSD3990 Ao =	0.99987										
		EOSD3990 MDT =	0.39024										

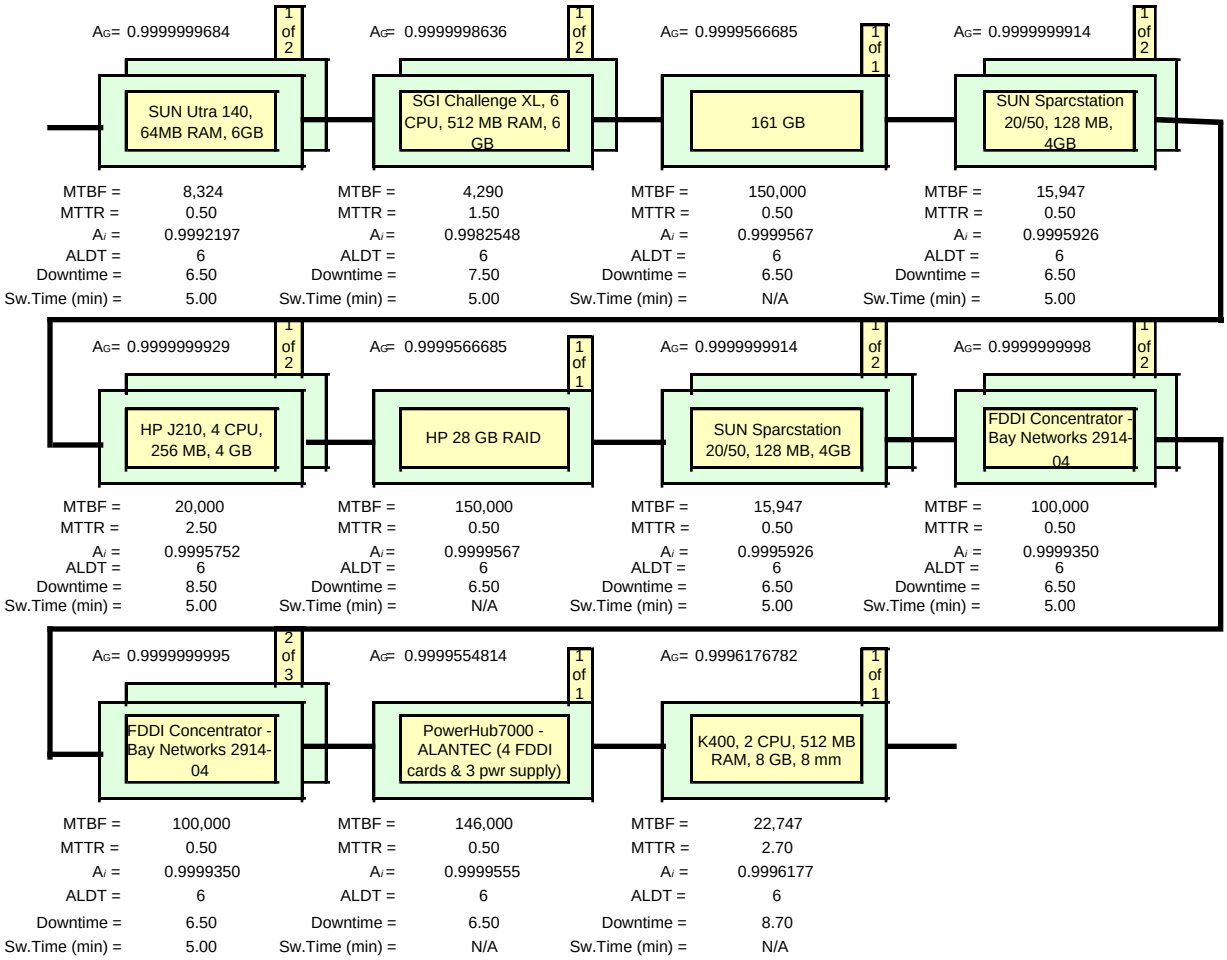
AG= 0.9999999684
1 of 2
SUN Utra 140, 64MB RAM, 6GB
MTBF = 8,324
MTTR = 0.50
Ai = 0.9992197
ALDT = 6
Downtime = 6.50
Sw.Time (min) = 5.00
AG= 0.9999998636
1 of 2
SGI Challenge XL, 6 CPU, 512 MB RAM, 6 GB
MTBF = 4,290
MTTR = 1.50
Ai = 0.9982548
ALDT = 6
Downtime = 7.50
Sw.Time (min) = 5.00
AG= 0.9999566685
1 of 1
161 GB
MTBF = 150,000
MTTR = 0.50
Ai = 0.9999567
ALDT = 6
Downtime = 6.50
Sw.Time (min) = N/A
AG= 0.9999999914
1 of 2
SUN Sparcstation 20/50, 128 MB, 4GB
MTBF = 15,947
MTTR = 0.50
Ai = 0.9995926
ALDT = 6
Downtime = 6.50
Sw.Time (min) = 5.00
AG= 0.9999999929
1 of 2
HP J210, 4 CPU, 256 MB, 4 GB
MTBF = 20,000
MTTR = 2.50
Ai = 0.9995752
ALDT = 6
Downtime = 8.50
Sw.Time (min) = 5.00
AG= 0.9999566685
1 of 1
HP 28 GB RAID
MTBF = 150,000
MTTR = 0.50
Ai = 0.9999567
ALDT = 6
Downtime = 6.50
Sw.Time (min) = N/A
AG= 0.9999999914
1 of 2
SUN Sparcstation 20/50, 128 MB, 4GB
MTBF = 15,947
MTTR = 0.50
Ai = 0.9995926
ALDT = 6
Downtime = 6.50
Sw.Time (min) = 5.00
AG= 0.9999999998
1 of 2
FDDI Concentrator - Bay Networks 2914-04
MTBF = 100,000
MTTR = 0.50
Ai = 0.9999350
ALDT = 6
Downtime = 6.50
Sw.Time (min) = 5.00
AG= 0.9999999995
2 of 3
FDDI Concentrator - Bay Networks 2914-04
MTBF = 100,000
MTTR = 0.50
Ai = 0.9999350
ALDT = 6
Downtime = 6.50
Sw.Time (min) = 5.00
AG= 0.9999554814
1 of 1
PowerHub7000 - ALANTEC (4 FDDI cards & 3 pwr supply)
MTBF = 146,000
MTTR = 0.50
Ai = 0.9999555
ALDT = 6
Downtime = 6.50
Sw.Time (min) = N/A
AG= 0.9996176782
1 of 1
K400, 2 CPU, 512 MB RAM, 8 GB, 8 mm
MTBF = 22,747
MTTR = 2.70
Ai = 0.9996177
ALDT = 6
Downtime = 8.70
Sw.Time (min) = N/A

EOSD 4000 Ao/MDT Analytical Results for ORNL

EOSD4000: Function Of IMS Data Management and Maintenance Interface (Ao>=.96, MDT<=4.0 hrs)

Subsystem Description	Equipment Description	Model/Part Number	MTBF (hour)	MTTR (hour)	Admin. Logistic Delay Time (hour)	Switchover Time (min)	Total Downtime (hour)	Number of Units Required (m)	Total Number Of Units (n)	Redundancy	Unit Availability (Ai)	P	Redundant Group Availability (m out of n)
Data Manag.	DMG SERVER	K400, 2 CPU, 512 MB RAM, 8 GB, 8 mm	22,747	2.7	6	N/A	8.70	1	1	N/A	0.9996176782	N/A	0.999617678
Data Manag.	DATA SPECIALIST W/S	SUN Utra 140, 64MB RAM, 6GB	8,324	0.5	6	5.00	6.50	1	2	standby off-line	0.9992197347	1.0	0.999999968
ACM	OPS WORKSTATION	SUN Utra 140, 64MB RAM, 6GB	8,324	0.5	6	5.00	6.50	1	2	standby off-line	0.9992197347	1.0	0.999999968
DRP	DBMS SERVER	SGI Challenge XL, 2 CPU, 256 MB RAM, 6 GB	5,109	1.5	6	5.00	7.50	1	2	standby off-line	0.9985341542	1.0	0.999999904
DRP	RAID DISK	17 GB	150,000	0.5	6	N/A	6.50	1	1	N/A	0.9999566685	N/A	0.999956669
MSS/CSS	MSS/CSS SERVER	HP J210, 4 CPU, 256 MB, 4 GB	20000	2.5	6	5.00	8.50	1	2	standby off-line	0.9995751805	1.0	0.999999993
MSS	RAID	HP 28 GB RAID	150,000	0.5	6	N/A	6.50	1	1	N/A	0.9999566685	N/A	0.999956669
MSS	MSS WS	SUN Sparcstation 20/50, 128 MB, 4GB	15,947	0.5	6	5.00	6.50	1	2	standby off-line	0.9995925659	1.0	0.999999991
ISS	FDDI CONCENTRATOR	FDDI Concentrator - Bay Networks 2914-04	100,000	0.5	6	5.00	6.50	1	2	standby off-line	0.9999350042	1.0	1.000000000
ISS	FDDI CONCENTRATOR	FDDI Concentrator - Bay Networks 2914-04	100,000	0.5	6	5.00	6.50	2	3	standby off-line	0.9999350042	1.0	1.000000000
ISS	FDDI SWITCH	PowerHub7000 - ALANTEC (4 FDDI cards & 3 pwr supply)	146,000	0.5	6	N/A	6.50	1	1	N/A	0.9999554814	N/A	0.999955481
													0.9998687115
		EOSD4000 Ao =	0.99987										
		EOSD4000 MDT =	0.45481										

EOSD 4000 Ao/MDT Analytical Results for ORNL

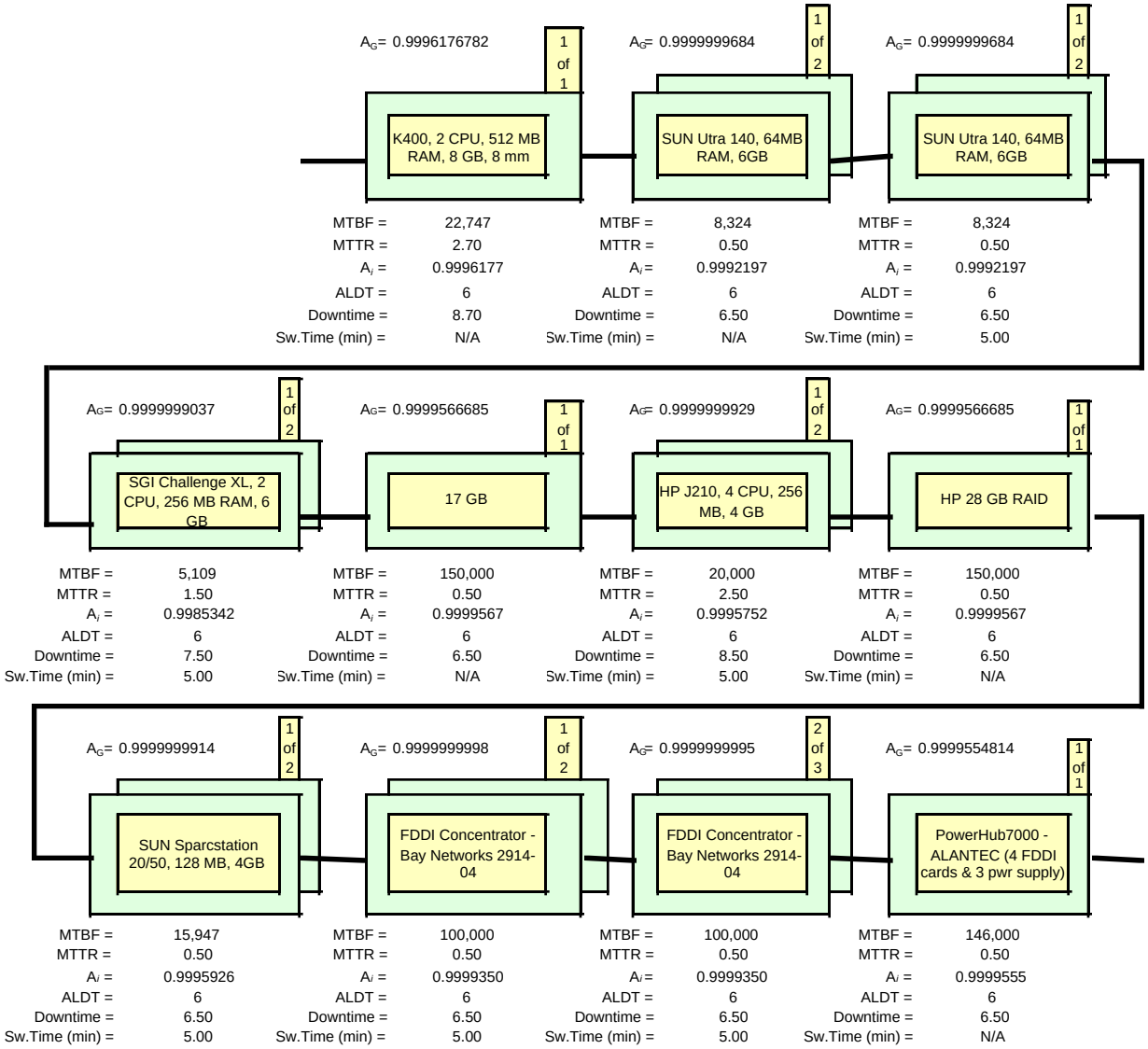

EOSD 3700 Ao/MDT Analytical Results for EDC

EOSD3700: Function of Planning and Data Processing (Ao>=.96, MDT<=4.0 hrs)

Subsystem Description	Equipment Description	Model/Part Number	MTBF (hour)	MTTR (hour)	Admin. Logistic Delay Time (hour)	Switchover Time (min)	Total Downtime (hour)	Number of Units Required (m)	Total Number Of Units (n)	Redundancy	Unit Availability (Ai)	P	Redundant Group Availability (m out of n)
Science Proc,	SCIENCE PROCESSOR	SGI Pwr Chal. XL, 10 CPU, 1GB RAM, HiPPI	3,697	1.5	6	60.00	7.50	1	1	N/A	0.9979754353	N/A	0.997975435
Science Proc,	RAID DISK	SGI 108 GB	150,000	0.5	6	N/A	6.50	2	2	N/A	0.9999566685	N/A	0.999913341
Science Proc,	SCIENCE PROCESSOR	SGI Pwr Chal.XL, 4CPU, 512MB, 4GB, HiPPI, 4mm	4,664	1.5	6	60.00	7.50	1	1	N/A	0.9983945200	N/A	0.998394520
Science Proc,	TAPE STACKER	3, 8mm Drives w/stacker - Exabyte	160,000	0.3	6	N/A	6.25	1	1	N/A	0.9999609390	N/A	0.999960939
Science Proc,	RAID	SGI 720 GB	150,000	0.5	6	N/A	6.00	1	1	N/A	0.9999600016	N/A	0.999960002
Science Proc,	X TERMINAL	X TERMINAL, NCD HMX Pro, 16 MB RAM	27,548	0.5	6	5.00	6.50	5	6	standby off-line	0.9997641039	1.0	0.999999974
Science Proc,	SCIENCE PROCESSOR	SGI Pwr Chal. XL, 10 CPU, 1GB RAM, HiPPI	3,697	1.5	6	60.00	7.50	1	1	N/A	0.9979754353	N/A	0.997975435
Science Proc,	RAID	SGI 720 GB	150,000	0.5	6	N/A	6.00	1	1	N/A	0.9999600016	N/A	0.999960002
Science Proc,	SCIENCE PROCESSOR	SGI Pwr Chal. XL, 10 CPU, 1GB RAM, HiPPI	3,697	1.5	6	60.00	7.50	1	1	N/A	0.9979754353	N/A	0.997975435
Science Proc,	RAID	SGI 432 GB	150,000	0.5	6	N/A	6.50	1	1	N/A	0.9999566685	N/A	0.999956669
Science Proc,	QUEUING SVR/DISK	SUN Ultra 8-slot, 256MB RAM, 4GB/20GB	7,185	0.5	6	5.00	6.50	1	1	N/A	0.9990961552	N/A	0.999096155
Planning	PLN DBMS SVR/DISK	SUN Ultra 8-slot, 256MB RAM, 4GB/20GB	7,185	0.5	6	5.00	6.50	1	2	standby off-line	0.9990961552	1.0	0.999999958
													0.9911989597
		EOSD3700 Ao =	0.99120										
		EOSD3700 MDT =	1.213										

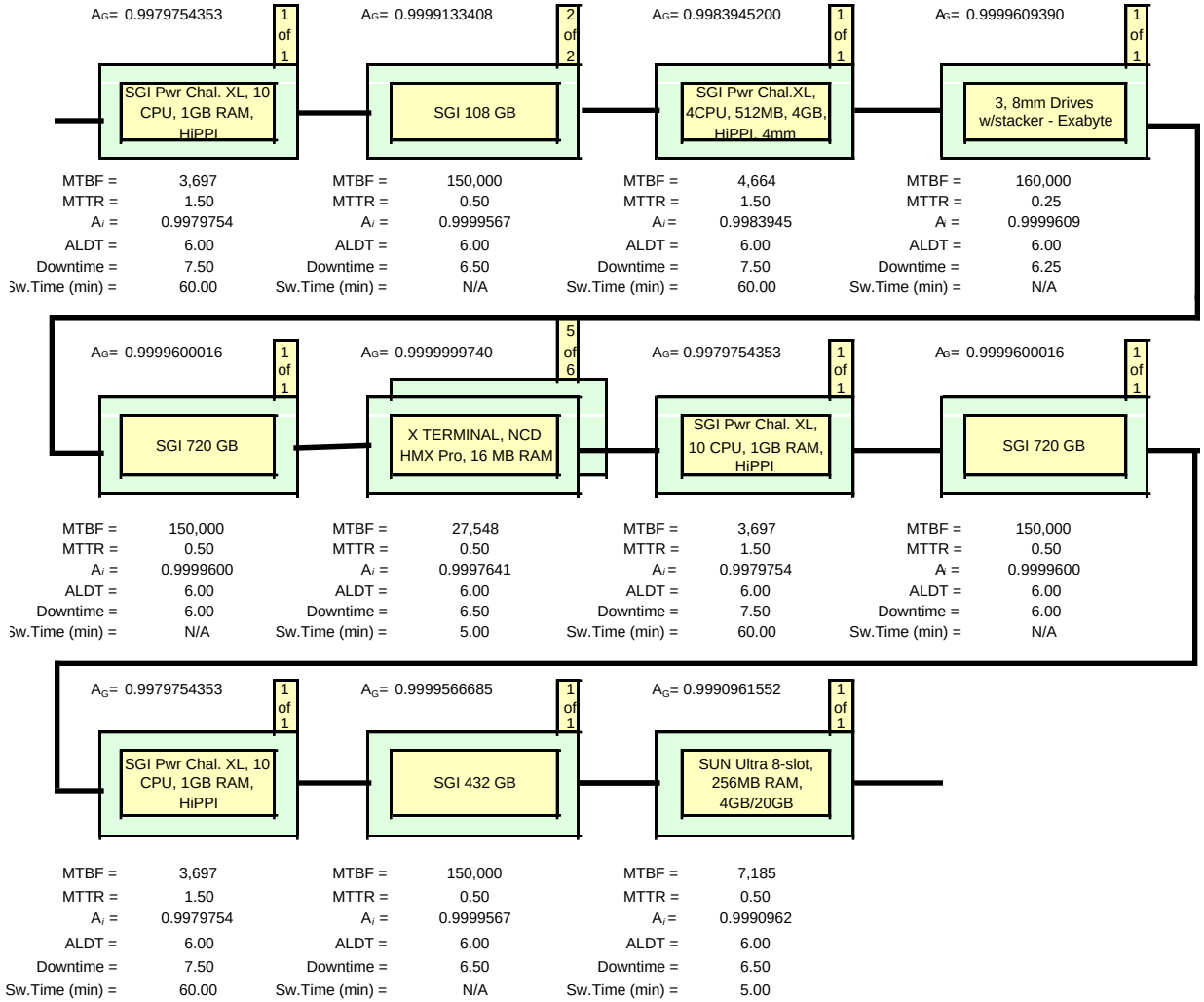
AG= 0.9979754353
1 of 1
SGI Pwr Chal. XL, 10 CPU, 1GB RAM, HiPPI
MTBF = 3,697
MTTR = 1.50
Ai = 0.9979754
ALDT = 6.00
Downtime = 7.50
Sw.Time (min) = 60.00
AG= 0.9999133408
2 of 2
SGI 108 GB
MTBF = 150,000
MTTR = 0.50
Ai = 0.9999567
ALDT = 6.00
Downtime = 6.50
Sw.Time (min) = N/A
AG= 0.9983945200
1 of 1
SGI Pwr Chal.XL, 4CPU, 512MB, 4GB, HiPPI, 4mm
MTBF = 4,664
MTTR = 1.50
Ai = 0.9983945
ALDT = 6.00
Downtime = 7.50
Sw.Time (min) = 60.00
AG= 0.9999609390
1 of 1
3, 8mm Drives w/stacker - Exabyte
MTBF = 160,000
MTTR = 0.25
Ai = 0.9999609
ALDT = 6.00
Downtime = 6.25
Sw.Time (min) = N/A
AG= 0.9999600016
1 of 1
SGI 720 GB
MTBF = 150,000
MTTR = 0.50
Ai = 0.9999600
ALDT = 6.00
Downtime = 6.00
Sw.Time (min) = N/A
AG= 0.9999999740
5 of 6
X TERMINAL, NCD HMX Pro, 16 MB RAM
MTBF = 27,548
MTTR = 0.50
Ai = 0.9997641
ALDT = 6.00
Downtime = 6.50
Sw.Time (min) = 5.00
AG= 0.9979754353
1 of 1
SGI Pwr Chal. XL, 10 CPU, 1GB RAM, HiPPI
MTBF = 3,697
MTTR = 1.50
Ai = 0.9979754
ALDT = 6.00
Downtime = 7.50
Sw.Time (min) = 60.00
AG= 0.9999600016
1 of 1
SGI 720 GB
MTBF = 150,000
MTTR = 0.50
Ai = 0.9999600
ALDT = 6.00
Downtime = 6.00
Sw.Time (min) = N/A
AG= 0.9979754353
1 of 1
SGI Pwr Chal. XL, 10 CPU, 1GB RAM, HiPPI
MTBF = 3,697
MTTR = 1.50
Ai = 0.9979754
ALDT = 6.00
Downtime = 7.50
Sw.Time (min) = 60.00
AG= 0.9999566685
1 of 1
SGI 432 GB
MTBF = 150,000
MTTR = 0.50
Ai = 0.9999567
ALDT = 6.00
Downtime = 6.50
Sw.Time (min) = N/A
AG= 0.9990961552
1 of 1
SUN Ultra 8-slot, 256MB RAM, 4GB/20GB
MTBF = 7,185
MTTR = 0.50
Ai = 0.9990962
ALDT = 6.00
Downtime = 6.50
Sw.Time (min) = 5.00

EOSD 3900 Ao/MDT Analytical Results for EDC

EOSD3900: Function of Receiving Science Data (Ao>=.9990, MDT<=2.0 hrs)

Subsystem Description	Equipment Description	Model/Part Number	MTBF (hour)	MTTR (hour)	Admin. Logistic Delay Time (hour)	Switch over Time (min)	Total Downtime (hour)	Number of Units Required (m)	Total Number Of Units (n)	Redundancy	Unit Availability (Ai)	P	Redundant Group Availability (m out of n)
Ingest	RAID	SGI 102 GB RAID	150,000	0.5	6	N/A	6.50	1	1	N/A	0.9999566685	N/A	0.999956669
Ingest	INGEST SVR/8mm Drives	SGI Challenge DM, 2 CPU/3 8mm drives	5,741	1.5	6	5.00	7.50	1	2	standby off-line	0.9986953118	1.0	1.000000000
Ingest	X TERM.(Red.w/Dat Svr W/S)	X TERMINAL, NCD HMX Pro, 16 MB RAM	27,548	0.5	6	5.00	6.50	1	2	standby off-line	0.9997641039	1.0	1.000000000
MSS/CSS	MSS/CSS SERVER	HP J210, 4 CPU, 256 MB, 4 GB	20000	2.5	6	5.00	8.50	1	2	standby off-line	0.9995751805	1.0	0.999999993
MSS	RAID	HP 64GB RAID	150,000	0.5	6	N/A	6.50	1	1	N/A	0.9999566685	N/A	0.999956669
MSS	MSS WS	SUN Sparcstation 20/50, 128 MB, 4GB	15,947	0.5	6	5.00	6.50	1	2	standby off-line	0.9995925659	1.0	0.999999991
ISS	FDDI CONCENTRATOR	FDDI Concentrator - Bay Networks 2914-04	100,000	0.5	6	5.00	6.50	1	2	standby off-line	0.9999350042	1.0	1.000000000
ISS	FDDI CONCENTRATOR	FDDI Concentrator - Bay Networks 2914-04	100,000	0.5	6	5.00	6.50	2	3	standby off-line	0.9999350042	1.0	1.000000000
ISS	FDDI SWITCH	PowerHub7000 - ALANTEC (4 FDDI cards & 3 pwr supply)	146,000	0.5	6	N/A	6.50	1	1	N/A	0.9999554814	N/A	0.999955481
													0.9999133225
		EOSD3900 Ao =	0.99991										
		EOSD3900 MDT =	0.3233										

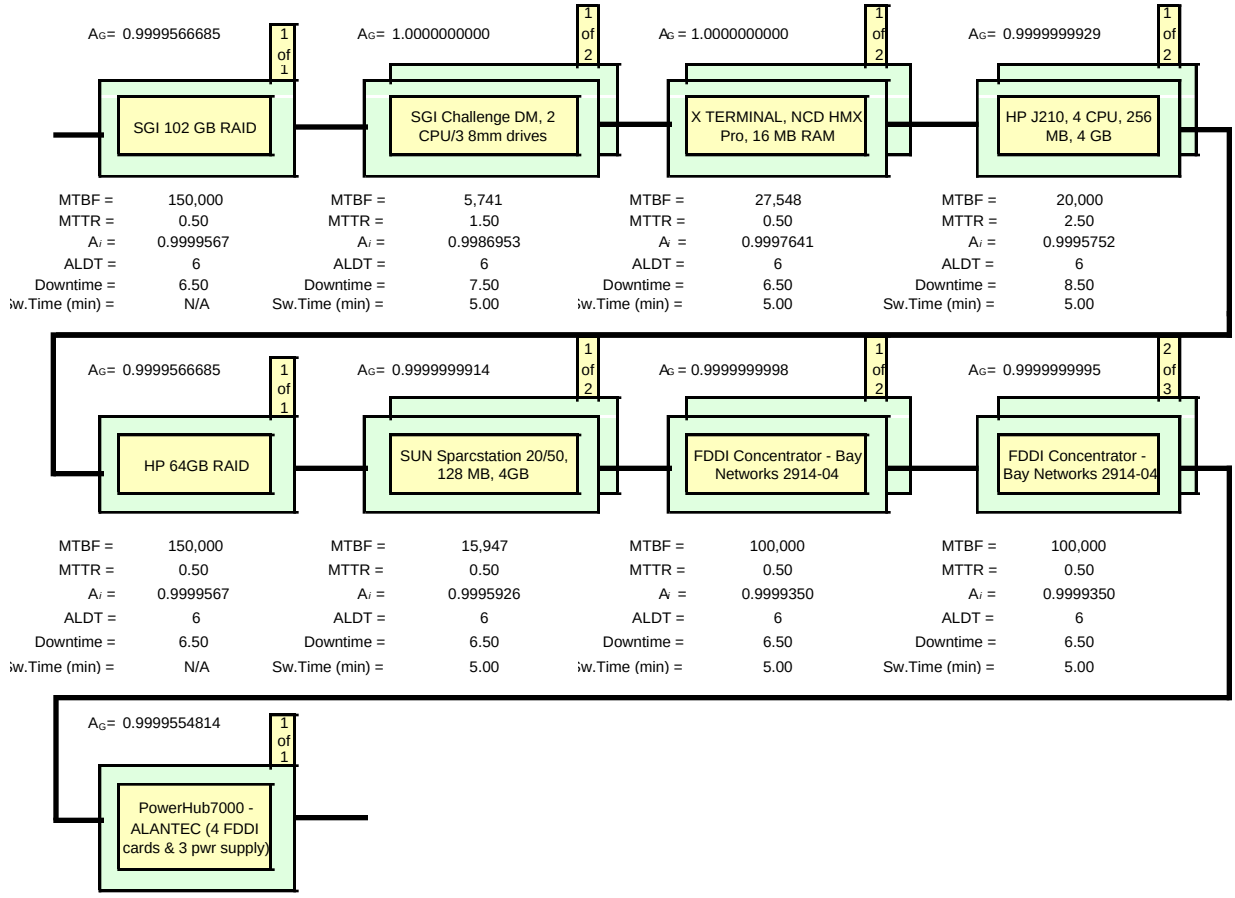

MTBF = 146,000
MTTR = 0.50
A_i = 0.9999555
ALDT = 6
Downtime = 6.50
Sw.Time (min) = N/A

EOSD 3920 Ao/MDT Analytical Results for EDC

EOSD3920:Function of Archiving And Distributing Data (Ao>=.980, MDT<=2.0 hrs)

Subsystem Description	Equipment Description	Model/Part Number	MTBF (hour)	MTTR (hour)	Admin. Logistic Delay Time (hour)	Switchover Time (min)	Total Downtime (hour)	Number of Units Required (m)	Total Number Of Units (n)	Redundancy	Unit Availability (Ai)	P	Redundant Group Availability (m out of n)
ACM	APC SERVER	SGI Challenge L, 4 CPU, 256 MB RAM, 4 GB	6,714	1.5	6	5.00	7.50	1	2	standby off-line	0.9988841776	1.0	0.999999944
ACM	RAID DISK	360 GB	150,000	0.5	6	N/A	6.50	2	2	N/A	0.9999566685	N/A	0.999913341
ACM	OPS WORKSTATION	SUN Utra 140, 64MB RAM, 6GB	8,324	0.5	6	5.00	6.50	1	2	standby off-line	0.9992197347	1.0	0.999999968
DIP	DISTRIBUTION SERVER	SUN Utra 140, 64MB RAM, 6GB	8,324	0.5	6	5.00	6.50	1	2	standby off-line	0.9992197347	1.0	0.999999968
DIP	RAID DISK	288 GB	150,000	0.5	6	N/A	6.50	1	1	N/A	0.9999566685	N/A	0.999956669
DIP	TAPE STACKER	3, 8mm Drives w/stacker - Exabyte	160,000	0.3	6	N/A	6.25	1	1	N/A	0.9999609390	N/A	0.999960939
DIP	TAPE STACKER	3, 4mm Drives w/stacker - Exabyte	146,000	0.5	6	N/A	6.50	1	1	N/A	0.9999554814	N/A	0.999955481
DIP	CD ROM (1)	CD ROM, Recordable, JVC	58,392	0.5	6	N/A	6.50	3	3	N/A	0.9998886958	N/A	0.999666162
DIP	TAPE DRIVE (1)	3480/3490 TAPE DRIVE	140,000	0.5	6	N/A	6.50	1	1	N/A	0.9999535736	N/A	0.999953574
WKS	WKS HOST	SGI Challenge XL, 4 CPU, 512 MB RAM, 6 GB	4,664	1.5	6	5.00	7.50	1	2	standby off-line	0.9983945200	1.0	0.999999885
WKS	RAID DISK	SGI 102 GB	150,000	0.5	6	N/A	6.50	1	1	N/A	0.9999566685	N/A	0.999956669
DRP	ARCHIVE ROBOTICS (2)	STK Powderhorn ATL	8,515	1.0	6	N/A	7.00	2	2	N/A	0.9991785966	N/A	0.998358541
DRP	TAPE DRIVE (2)	3590 Tape Drive (16 each per archive robotics)	16,667	1.0	6	10.00	7.00	31	32	standby off-line	0.9995801847	1.0	0.999995715
DRP	FSMS SERVER	SGI Challenge XL, 6 CPU, 512 MB RAM, 6 GB	4,290	1.5	6	5.00	7.50	1	2	standby off-line	0.9982547993	1.0	0.999999864
DRP	RAID DISK	51 GB	150,000	0.5	6	N/A	6.50	1	1	N/A	0.9999566685	N/A	0.999956669
DRP	ARCHIVE ROBOTICS (2)	STK Powderhorn ATL	8,515	1.0	6	N/A	7.00	2	2	N/A	0.9991785966	N/A	0.998358541
DRP	TAPE DRIVE (2)	3590 Tape Drive (16 each per archive robotics)	16,667	1.0	6	10.00	7.00	31	32	standby off-line	0.9995801847	1.0	0.999995715
DRP	DBMS SERVER	SGI Challenge XL, 2 CPU, 256 MB RAM, 6 GB	5,109	1.5	6	5.00	7.50	1	2	standby off-line	0.9985341542	1.0	0.999999904
DRP	RAID DISK	34GB	150,000	0.5	6	N/A	6.50	1	1	N/A	0.9999566685	N/A	0.999956669
DDS	DOCUMENT SERVER	SUN Ultra 4-Slot, 256MB, 6GB	8,300	0.5	6	5.00	6.50	1	2	standby off-line	0.9992174803	1.0	0.999999968
DDS	DOCUMENT SVR RAID	6GB	150,000	0.5	6	N/A	6.50	1	1	N/A	0.9999566685	N/A	0.999956669
MSS/CSS	MSS/CSS SERVER	HP J210, 4 CPU, 384 MB, 4 GB	20000	2.5	6	5.00	8.50	1	2	standby off-line	0.9995751805	1.0	0.999999993
MSS	RAID	HP 64 GB RAID	150,000	0.5	6	N/A	6.50	1	1	N/A	0.9999566685	N/A	0.999956669
MSS	MSS WS	SUN Sparcstation 20/50, 128 MB, 4GB	15,947	0.5	6	5.00	6.50	1	2	standby off-line	0.9995925659	1.0	0.999999991
ISS	FDDI CONCENTRATOR	FDDI Concentrator - Bay Networks 2914-04	100,000	0.5	6	5.00	6.50	1	2	standby off-line	0.9999350042	1.0	1.000000000
ISS	FDDI CONCENTRATOR	FDDI Concentrator - Bay Networks 2914-04	100,000	0.5	6	5.00	6.50	2	3	standby off-line	0.9999350042	1.0	1.000000000
ISS	FDDI SWITCH	PowerHub7000 - ALANTEC (4 FDDI cards & 3 pwr supply)	146,000	0.5	6	N/A	6.50	1	1	N/A	0.9999554814	N/A	0.999955481
													0.9958588188
		EOSD3920 Ao =	0.99586										
		EOSD3920 MDT =	1.36333										

Note: (1) Peripherals are 25% Duty Cycle
(2) Archive Robot and Drives Failure Rates are 60% Duty Cyle

EOSD 3920 Ao/MDT Analytical Results for EDC (continued)

A_G = 0.9999999442 (1 of 2)	A_G = 0.9999133408 (2 of 2)	A_G = 0.9999999684 (1 of 2)	A_G = 0.9999999684 (1 of 2)
SGI Challenge L, 4 CPU, 256 MB RAM, 4	360 GB	SUN Ultra 140, 64MB RAM, 6GB	SUN Ultra 140, 64MB RAM, 6GB
MTBF = 6,714	MTBF = 150,000	MTBF = 8,324	MTBF = 8,324
MTTR = 1.50	MTTR = 0.50	MTTR = 0.50	MTTR = 0.50
A_i = 0.9988842	A_i = 0.9999567	A_i = 0.9992197	A_i = 0.9992197
ALDT = 6	ALDT = 6	ALDT = 6	ALDT = 6
Downtime = 7.50	Downtime = 6.50	Downtime = 6.50	Downtime = 6.50
Sw.Time (min) = 5.00	Sw.Time (min) = N/A	Sw.Time (min) = 5.00	Sw.Time (min) = 5.00
A_G = 0.9999566685 (1 of 1)	A_G = 0.9999609390 (1 of 1)	A_G = 0.9999554814 (1 of 1)	A_G = 0.9996661616 (3 of 3)
288 GB	3, 8mm Drives w/stacker - Exabyte	3, 4mm Drives w/stacker - Exabyte	CD ROM, Recordable, JVC
MTBF = 150,000	MTBF = 160,000	MTBF = 146,000	MTBF = 58,392
MTTR = 0.50	MTTR = 0.25	MTTR = 0.50	MTTR = 0.50
A_i = 0.9999567	A_i = 0.9999609	A_i = 0.9999555	A_i = 0.9998887
ALDT = 6	ALDT = 6	ALDT = 6	ALDT = 6
Downtime = 6.50	Downtime = 6.25	Downtime = 6.50	Downtime = 6.50
Sw.Time (min) = N/A	Sw.Time (min) = N/A	Sw.Time (min) = N/A	Sw.Time (min) = N/A
A_G = 0.9999535736 (1 of 1)	A_G = 0.9999998845 (1 of 2)	A_G = 0.9999566685 (1 of 1)	A_G = 0.9983585414 (2 of 2)
3480/3490 TAPE DRIVE	SGI Challenge XL, 4 CPU, 512 MB RAM, 6	SGI 102 GB	STK Powderhorn ATL
MTBF = 140,000	MTBF = 4,664	MTBF = 150,000	MTBF = 8,515
MTTR = 0.50	MTTR = 1.50	MTTR = 0.50	MTTR = 1.00
A_i = 0.9999536	A_i = 0.9983945	A_i = 0.9999567	A_i = 0.9991786
ALDT = 6	ALDT = 6	ALDT = 6	ALDT = 6
Downtime = 6.50	Downtime = 7.50	Downtime = 6.50	Downtime = 7.00
Sw.Time (min) = N/A	Sw.Time (min) = 5.00	Sw.Time (min) = N/A	Sw.Time (min) = N/A
A_G = 0.9999998636 (1 of 2)	A_G = 0.9999566685 (1 of 1)	A_G = 0.9983585414 (2 of 2)	A_G = 0.9999957149 (31 of 32)
SGI Challenge XL, 6 CPU, 512 MB RAM, 6 GB	51 GB	STK Powderhorn ATL	3590 Tape Drive (16 each per archive robotics)
MTBF = 4,290	MTBF = 150,000	MTBF = 8,515	MTBF = 16,667
MTTR = 1.50	MTTR = 0.50	MTTR = 1.00	MTTR = 1.00
A_i = 0.9982548	A_i = 0.9999567	A_i = 0.9991786	A_i = 0.9995802
ALDT = 6	ALDT = 6	ALDT = 6	ALDT = 6
Downtime = 7.50	Downtime = 6.50	Downtime = 7.00	Downtime = 7.00
Sw.Time (min) = 5.00	Sw.Time (min) = N/A	Sw.Time (min) = N/A	Sw.Time (min) = 10.00
A_G = 0.9999999037 (1 of 2)	A_G = 0.9999566685 (1 of 1)	A_G = 0.9999999682 (1 of 2)	A_G = 0.9999566685 (1 of 1)
SGI Challenge XL, 2 CPU, 256 MB RAM, 6	34GB	SUN Ultra 4-Slot, 256MB, 6GB	6GB
MTBF = 5,109	MTBF = 150,000	MTBF = 8,300	MTBF = 150,000
MTTR = 1.50	MTTR = 0.50	MTTR = 0.50	MTTR = 0.50
A_i = 0.9985342	A_i = 0.9999567	A_i = 0.9992175	A_i = 0.9999567
ALDT = 6	ALDT = 6	ALDT = 6	ALDT = 6
Downtime = 7.50	Downtime = 6.50	Downtime = 6.50	Downtime = 6.50
Sw.Time (min) = 5.00	Sw.Time (min) = N/A	Sw.Time (min) = 5.00	Sw.Time (min) = N/A
A_G = 0.9999999929 (1 of 2)	A_G = 0.9999566685 (1 of 1)	A_G = 0.9999999914 (1 of 2)	A_G = 0.9999999998 (1 of 2)
HP J210, 4 CPU, 384 MB, 4 GB	HP 64 GB RAID	SUN Sparcstation 20/50, 128 MB, 4GB	FDDI Concentrator - Bay Networks 2914-
MTBF = 20,000	MTBF = 150,000	MTBF = 15,947	MTBF = 100,000
MTTR = 2.50	MTTR = 0.50	MTTR = 0.50	MTTR = 0.50
A_i = 0.9995752	A_i = 0.9999567	A_i = 0.9995926	A_i = 0.9999350
ALDT = 6	ALDT = 6	ALDT = 6	ALDT = 6
Downtime = 8.50	Downtime = 6.50	Downtime = 6.50	Downtime = 6.50
Sw.Time (min) = 5.00	Sw.Time (min) = N/A	Sw.Time (min) = 5.00	Sw.Time (min) = 5.00
A_G = 0.9999999995 (2 of 3)	A_G = 0.9999554814 (1 of 1)	A_G = 0.9999957149 (31 of 32)	
FDDI Concentrator - Bay Networks 2914-04	PowerHub7000 - ALANTEC (4 FDDI	3590 Tape Drive (16 each per archive	
MTBF = 100,000	MTBF = 146,000	MTBF = 16,667	
MTTR = 0.50	MTTR = 0.50	MTTR = 1.00	
A_i = 0.9999350	A_i = 0.9999555	A_i = 0.9995802	
ALDT = 6	ALDT = 6	ALDT = 6	
Downtime = 6.50	Downtime = 6.50	Downtime = 7.00	
Sw.Time (min) = 5.00	Sw.Time (min) = N/A	Sw.Time (min) = 10.00	

EOSD 3930 Ao/MDT Analytical Results for EDC

EOSD3930: User Interfaces to IMS Services at Individual DAAC Site (Ao>=.993, MDT<=2.0 hrs)

Subsystem Description	Equipment Description	Model/Part Number	MTBF (hour)	MTTR (hour)	Admin. Logistic Delay Time (hour)	Switchover Time (min)	Total Downtime (hour)	Number of Units Required (m)	Total Number Of Units (n)	Redundancy	Unit Availability (Ai)	P	Redundant Group Availability (m out of n)
Data Manag.	DMG SERVER	K400, 2 CPU, 512 MB RAM, 8 GB, 8 mm	22,747	2.7	6	N/A	8.70	1	1	N/A	0.9996176782	N/A	0.999617678
Data Manag.	RAID DISK	HP 10 GB	150,000	0.5	6	N/A	6.50	1	1	N/A	0.9999566685	N/A	0.999956669
Data Manag.	DATA SPECIALIST W/S	SUN Utra 140, 64MB RAM, 6GB	8,324	0.5	6	5.00	6.50	1	2	standby off-line	0.9992197347	1.0	0.999999968
Data Manag.	DBA OPS WORKSTATION	HP C100, 64 MB RAM, 6 GB	35,700	2.5	6	N/A	8.50	1	1	N/A	0.9997619614	N/A	0.999761961
ACM	APC SERVER	SGI Challenge L, 4 CPU, 256 MB RAM, 4 GB	6,714	1.5	6	5.00	7.50	1	2	standby off-line	0.9988841776	1.0	0.999999944
ACM	RAID DISK	360 GB	150,000	0.5	6	N/A	6.50	1	1	N/A	0.9999566685	N/A	0.999956669
ACM	OPS WORKSTATION	SUN Utra 140, 64MB RAM, 6GB	8,324	0.5	6	5.00	6.50	1	2	standby off-line	0.9992197347	1.0	0.999999968
DRP	DBMS SERVER	SGI Challenge XL, 2 CPU, 256 MB RAM, 6 GB	5,109	1.5	6	5.00	7.50	1	2	standby off-line	0.9985341542	1.0	0.999999904
DRP	RAID DISK	34 GB	150,000	0.5	6	N/A	6.50	1	1	N/A	0.9999566685	N/A	0.999956669
MSS/CSS	MSS/CSS SERVER	HP J210, 4 CPU, 256 MB, 4 GB	20000	2.5	6	5.00	8.50	1	2	standby off-line	0.9995751805	1.0	0.999999993
MSS	RAID	HP 64 GB RAID	150,000	0.5	6	N/A	6.50	1	1	N/A	0.9999566685	N/A	0.999956669
MSS	MSS WS	SUN Sparcstation 20/50, 128 MB, 4GB	15,947	0.5	6	5.00	6.50	1	2	standby off-line	0.9995925659	1.0	0.999999991
ISS	FDDI CONCENTRATOR	FDDI Concentrator - Bay Networks 2914-04	100,000	0.5	6	5.00	6.50	1	2	standby off-line	0.9999350042	1.0	1.000000000
ISS	FDDI CONCENTRATOR	FDDI Concentrator - Bay Networks 2914-04	100,000	0.5	6	5.00	6.50	2	3	standby off-line	0.9999350042	1.0	1.000000000
ISS	FDDI SWITCH	PowerHub7000 - ALANTEC (4 FDDI cards & 3 pwr supply)	146,000	0.5	6	N/A	6.50	1	1	N/A	0.9999554814	N/A	0.999955481
													0.9998252984

EOSD3930 Ao =	0.99983
EOSD3930 MDT =	0.35927

EOSD 3930 Ao/MDT Analytical Results for EDC (continued)

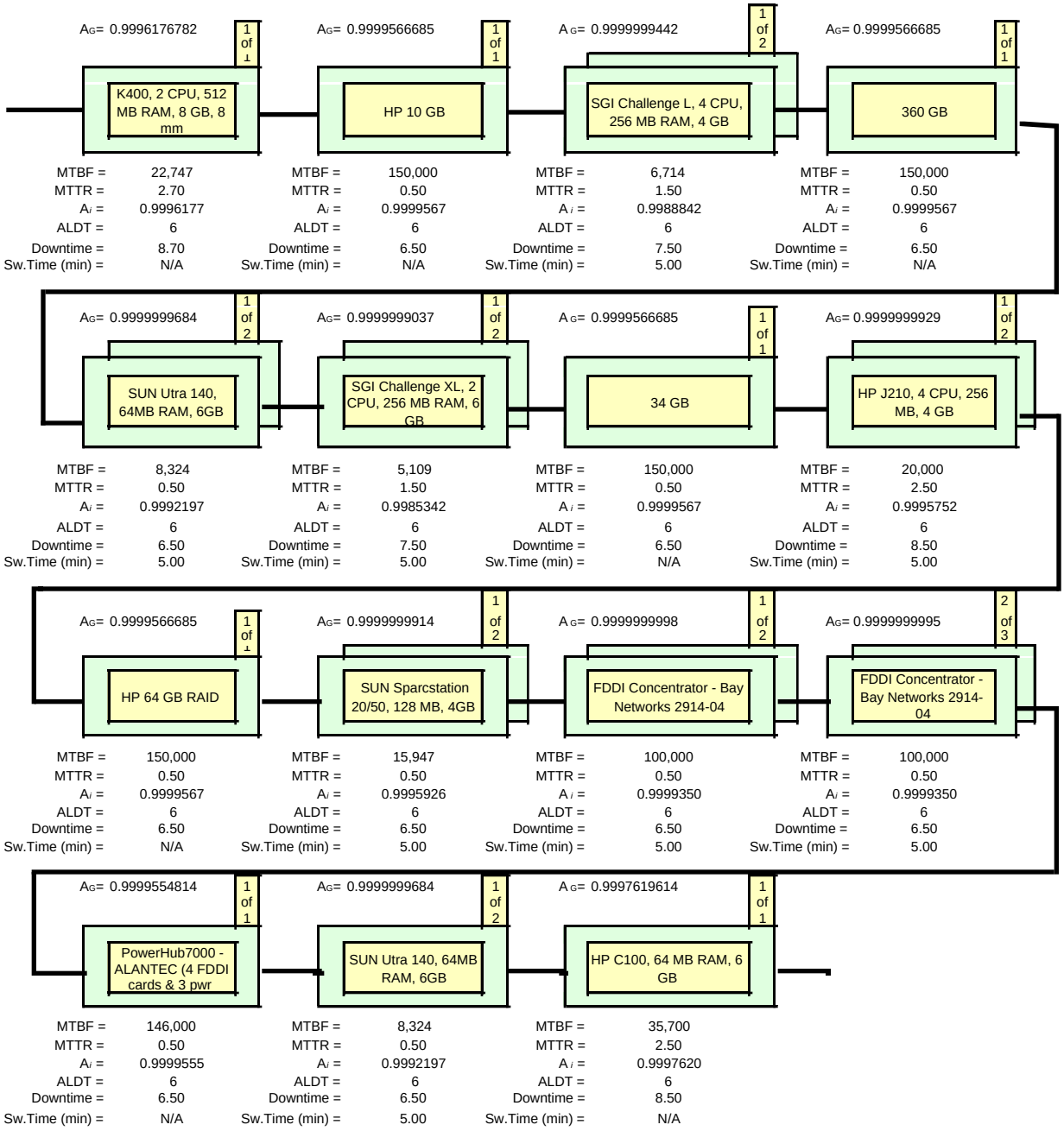

EOSD 3940 Ao/MDT Analytical Results for EDC

EOSD3940: Function Of Information Searches On The ECS Directory(Ao>=.993, MDT<=2.0 hrs)

Subsystem Description	Equipment Description	Model/Part Number	MTBF (hour)	MTTR (hour)	Admin. Logistic Delay Time (hour)	Switchover Time (min)	Total Downtime (hour)	Number of Units Required (m)	Total Number Of Units (n)	Redundancy	Unit Availability (Ai)	P	Redundant Group Availability (m out of n)
Data Manag.	DMG SERVER	K400, 2 CPU, 512 MB RAM, 8 GB, 8 mm	22,747	2.7	6	N/A	8.70	1	1	N/A	0.9996176782	N/A	0.999617678
Data Manag.	RAID DISK	HP 10 GB	150,000	0.5	6	N/A	6.50	1	1	N/A	0.9999566685	N/A	0.999956669
Data Manag.	DATA SPECIALIST W/S	SUN Utra 140, 64MB RAM, 6GB	8,324	0.5	6	5.00	6.50	1	2	standby off-line	0.9992197347	1.0	0.999999968
Data Manag.	DBA OPS WORKSTATION	HP C100, 64 MB RAM, 6 GB	35,700	2.5	6	N/A	8.50	1	1	N/A	0.9997619614	N/A	0.999761961
ACM	APC SERVER	SGI Challenge L, 4 CPU, 256 MB RAM, 4 GB	6,714	1.5	6	5.00	7.50	1	2	standby off-line	0.9988841776	1.0	0.999999944
ACM	RAID DISK	480 GB	150,000	0.5	6	N/A	6.50	1	1	N/A	0.9999566685	N/A	0.999956669
ACM	OPS WORKSTATION	SUN Utra 140, 64MB RAM, 6GB	8,324	0.5	6	5.00	6.50	1	2	standby off-line	0.9992197347	1.0	0.999999968
MSS/CSS	MSS/CSS SERVER	HP J210, 4 CPU, 256 MB, 4 GB	20000	2.5	6	5.00	8.50	1	2	standby off-line	0.9995751805	1.0	0.999999993
MSS	RAID	HP 64 GB RAID	150,000	0.5	6	N/A	6.50	1	1	N/A	0.9999566685	N/A	0.999956669
MSS	MSS WS	SUN Sparcstation 20/50, 128 MB, 4GB	15,947	0.5	6	5.00	6.50	1	2	standby off-line	0.9995925659	1.0	0.999999991
ISS	FDDI CONCENTRATOR	FDDI Concentrator - Bay Networks 2914-04	100,000	0.5	6	5.00	6.50	1	2	standby off-line	0.9999350042	1.0	1.000000000
ISS	FDDI CONCENTRATOR	FDDI Concentrator - Bay Networks 2914-04	100,000	0.5	6	5.00	6.50	2	3	standby off-line	0.9999350042	1.0	1.000000000
ISS	FDDI SWITCH	PowerHub7000 - ALANTEC (4 FDDI cards & 3 pwr supply)	146,000	0.5	6	N/A	6.50	1	1	N/A	0.9999554814	N/A	0.999955481
													0.9998687204

EOSD3940 Ao =	0.99987
EOSD3940 MDT =	0.39024

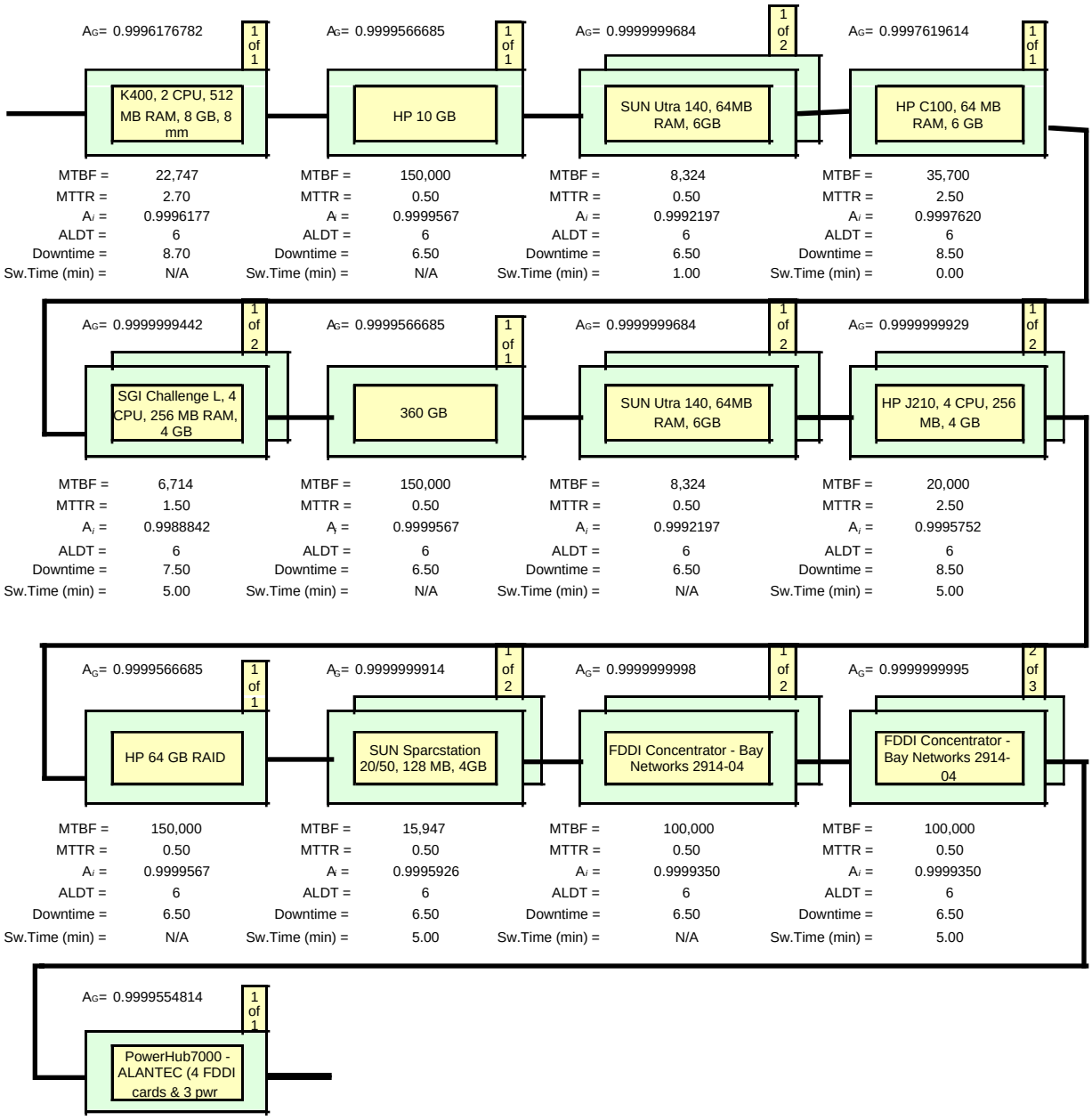
AG= 0.9996176782
1 of 1
K400, 2 CPU, 512 MB RAM, 8 GB, 8 mm
MTBF = 22,747
MTTR = 2.70
Ai = 0.9996177
ALDT = 6
Downtime = 8.70
Sw.Time (min) = N/A
AG= 0.9999566685
1 of 1
HP 10 GB
MTBF = 150,000
MTTR = 0.50
Ai = 0.9999567
ALDT = 6
Downtime = 6.50
Sw.Time (min) = N/A
AG= 0.9999999684
1 of 2
SUN Utra 140, 64MB RAM, 6GB
MTBF = 8,324
MTTR = 0.50
Ai = 0.9992197
ALDT = 6
Downtime = 6.50
Sw.Time (min) = 1.00
AG= 0.9997619614
1 of 1
HP C100, 64 MB RAM, 6 GB
MTBF = 35,700
MTTR = 2.50
Ai = 0.9997620
ALDT = 6
Downtime = 8.50
Sw.Time (min) = 0.00
AG= 0.9999999442
1 of 2
SGI Challenge L, 4 CPU, 256 MB RAM, 4 GB
MTBF = 6,714
MTTR = 1.50
Ai = 0.9988842
ALDT = 6
Downtime = 7.50
Sw.Time (min) = 5.00
AG= 0.9999566685
1 of 1
360 GB
MTBF = 150,000
MTTR = 0.50
Ai = 0.9999567
ALDT = 6
Downtime = 6.50
Sw.Time (min) = N/A
AG= 0.9999999684
1 of 2
SUN Utra 140, 64MB RAM, 6GB
MTBF = 8,324
MTTR = 0.50
Ai = 0.9992197
ALDT = 6
Downtime = 6.50
Sw.Time (min) = N/A
AG= 0.9999999929
1 of 2
HP J210, 4 CPU, 256 MB, 4 GB
MTBF = 20,000
MTTR = 2.50
Ai = 0.9995752
ALDT = 6
Downtime = 8.50
Sw.Time (min) = 5.00
AG= 0.9999566685
1 of 1
HP 64 GB RAID
MTBF = 150,000
MTTR = 0.50
Ai = 0.9999567
ALDT = 6
Downtime = 6.50
Sw.Time (min) = N/A
AG= 0.9999999914
1 of 2
SUN Sparcstation 20/50, 128 MB, 4GB
MTBF = 15,947
MTTR = 0.50
Ai = 0.9995926
ALDT = 6
Downtime = 6.50
Sw.Time (min) = 5.00
AG= 0.9999999998
1 of 2
FDDI Concentrator - Bay Networks 2914-04
MTBF = 100,000
MTTR = 0.50
Ai = 0.9999350
ALDT = 6
Downtime = 6.50
Sw.Time (min) = N/A
AG= 0.9999999995
2 of 3
FDDI Concentrator - Bay Networks 2914-04
MTBF = 100,000
MTTR = 0.50
Ai = 0.9999350
ALDT = 6
Downtime = 6.50
Sw.Time (min) = 5.00
AG= 0.9999554814
1 of 1
PowerHub7000 - ALANTEC (4 FDDI cards & 3 pwr
MTBF = 146,000
MTTR = 0.50
Ai = 0.9999555
ALDT = 6
Downtime = 6.50
Sw.Time (min) = N/A

EOSD 3960 Ao/MDT Analytical Results for EDC

EOSD3960:Function Of MetaData Ingest and Update (Ao>=.96, MDT<=4.0 hrs)

Subsystem Description	Equipment Description	Model/Part Number	MTBF (hour)	MTTR (hour)	Admin. Logistic Delay Time (hour)	Switchover Time (min)	Total Downtime (hour)	Number of Units Required (m)	Total Number Of Units (n)	Redundancy	Unit Availability (Ai)	P	Redundant Group Availability (m out of n)
Data Manag.	DATA SPECIALIST W/S	SUN Utra 140, 64MB RAM, 6GB	8,324	0.5	6	5.00	6.50	1	2	standby off-line	0.9992197347	1.0	0.999999968
Ingest	RAID	SGI 178 GB RAID	150,000	0.5	6	N/A	6.50	1	1	N/A	0.9999566685	N/A	0.999956669
Ingest	INGEST SVR/8mm Drives	SGI Challenge DM, 2 CPU/3 8mm drives	5,741	1.5	6	5.00	7.50	1	2	standby off-line	0.9986953118	1.0	1.000000000
Ingest	X TERM.(Red.w/DatSvr W/S)	X TERMINAL, NCD HMX Pro, 16 MB RAM	27,548	0.5	6	5.00	6.50	1	2	standby off-line	0.9997641039	1.0	1.000000000
ACM	APC SERVER	SGI Challenge L, 4 CPU, 256 MB RAM, 4 GB	6,714	1.5	6	5.00	7.50	1	2	standby off-line	0.9988841776	1.0	0.999999944
ACM	RAID DISK	360 GB	150,000	0.5	6	N/A	6.50	1	1	N/A	0.9999566685	N/A	0.999956669
ACM	OPS WORKSTATION	SUN Utra 140, 64MB RAM, 6GB	8,324	0.5	6	5.00	6.50	1	2	standby off-line	0.9992197347	1.0	0.999999968
DIP	DISTRIBUTION SERVER	SUN Utra 140, 64MB RAM, 6GB	8,324	1.0	6	5.00	7.00	1	2	standby off-line	0.9991597647	1.0	0.999999966
DIP	RAID DISK	288 GB	150,000	0.5	6	N/A	6.50	1	1	N/A	0.9999566685	N/A	0.999956669
DRP	DBMS SERVER	SGI Challenge XL, 2 CPU, 256 MB RAM, 6 GB	5,109	1.5	6	5.00	7.50	1	2	standby off-line	0.9985341542	1.0	0.999999904
DRP	RAID DISK	34GB	150,000	0.5	6	N/A	6.50	1	1	N/A	0.9999566685	N/A	0.999956669
MSS/CSS	MSS/CSS SERVER	HP J210, 4 CPU, 256 MB, 4 GB	20000	2.5	6	5.00	8.50	1	2	standby off-line	0.9995751805	1.0	0.999999993
MSS	RAID	HP 64 GB RAID	150,000	0.5	6	N/A	6.50	1	1	N/A	0.9999566685	N/A	0.999956669
MSS	MSS WS	SUN Sparcstation 20/50, 128 MB, 4GB	15,947	0.5	6	5.00	6.50	1	2	standby off-line	0.9995925659	1.0	0.999999991
ISS	FDDI CONCENTRATOR	FDDI Concentrator - Bay Networks 2914-04	100,000	0.5	6	5.00	6.50	1	2	standby off-line	0.9999350042	1.0	1.000000000
ISS	FDDI CONCENTRATOR	FDDI Concentrator - Bay Networks 2914-04	100,000	0.5	6	5.00	6.50	1	2	standby off-line	0.9999350042	1.0	1.000000000
ISS	FDDI CONCENTRATOR	FDDI Concentrator - Bay Networks 2914-04	100,000	0.5	6	5.00	6.50	2	3	standby off-line	0.9999350042	1.0	1.000000000
ISS	FDDI SWITCH	PowerHub7000 - ALANTEC (4 FDDI cards & 3 pwr supply)	146,000	0.5	6	N/A	6.50	1	1	N/A	0.9999554814	N/A	0.999955481
													0.9997819403

EOSD3960 Ao =	0.99978
EOSD3960 MDT =	0.36587

EOSD 3960 Ao/MDT Analytical Results for EDC (continued)

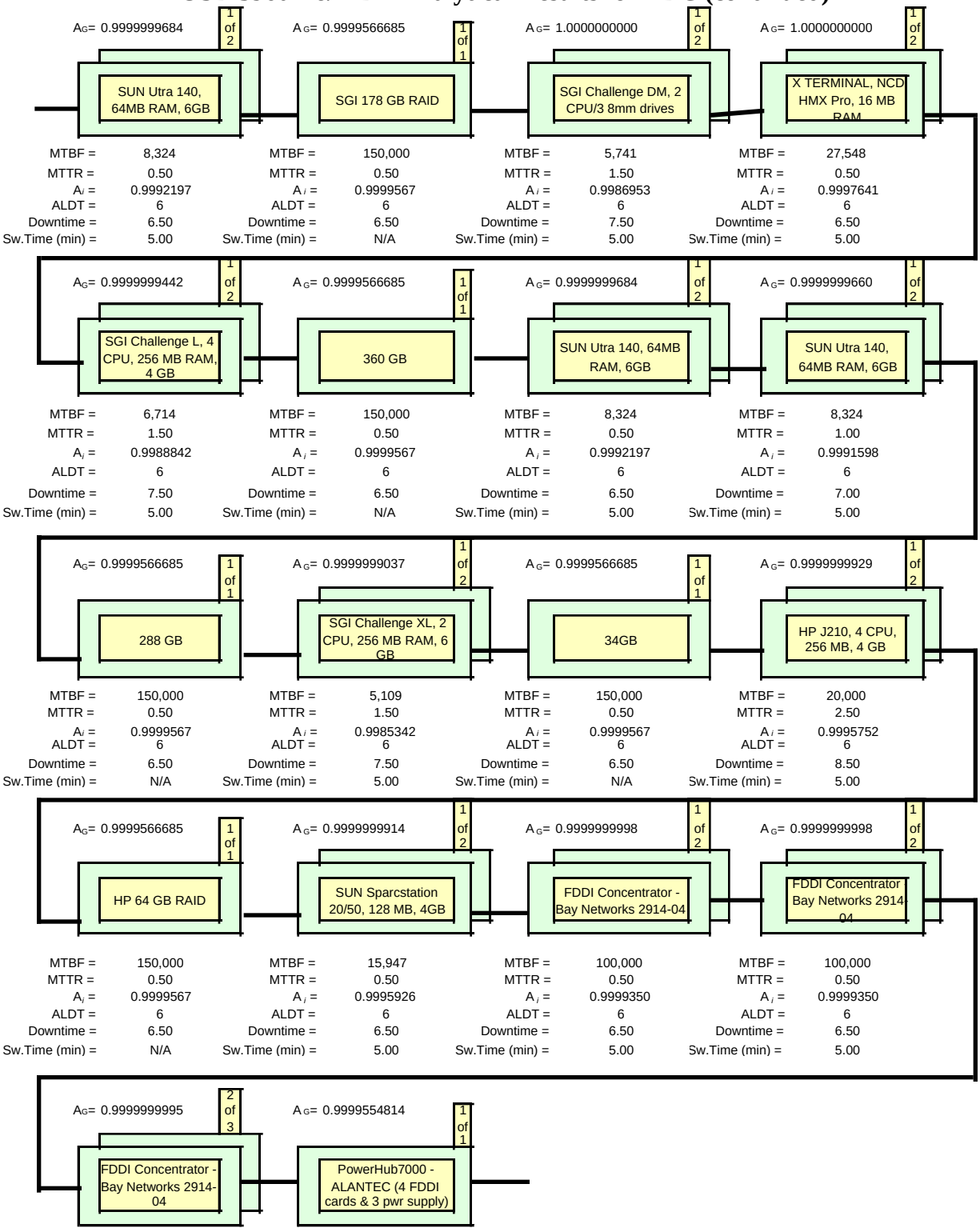

EOSD 3970 Ao/MDT Analytical Results for EDC

EOSD3970: Function Of Info. Searches On Local Holdings (Ao>=.96, MDT<=4.0 hrs)

Subsystem Description	Equipment Description	Model/Part Number	MTBF (hour)	MTTR (hour)	Admin. Logistic Delay Time (hour)	Switchover Time (min)	Total Downtime (hour)	Number of Units Required (m)	Total Number Of Units (n)	Redundancy	Unit Availability (Ai)	P	Redundant Group Availability (m out of n)
ACM	APC SERVER	SGI Challenge L, 4 CPU, 256 MB RAM, 4 GB	6,714	1.5	6	5.00	7.50	1	2	standby off-line	0.9988841776	1.0	0.999999944
ACM	RAID DISK	360 GB	150,000	0.5	6	N/A	6.50	1	1	N/A	0.9999566685	N/A	0.999956669
ACM	OPS WORKSTATION	SUN Utra 140, 64MB RAM, 6GB	8,324	0.5	6	5.00	6.50	1	2	standby off-line	0.9992197347	1.0	0.999999968
DRP	DBMS SERVER	SGI Challenge XL, 2 CPU, 256 MB RAM, 6 GB	5,109	1.5	6	5.00	7.50	1	2	standby off-line	0.9985341542	1.0	0.999999904
DRP	RAID DISK	34 GB	150,000	0.5	6	N/A	6.50	1	1	N/A	0.9999566685	N/A	0.999956669
MSS/CSS	MSS/CSS SERVER	HP J210, 4 CPU, 256 MB, 4 GB	20000	2.5	6	5.00	8.50	1	2	standby off-line	0.9995751805	1.0	0.999999993
MSS	RAID	HP 64 GB RAID	150,000	0.5	6	N/A	6.50	1	1	N/A	0.9999566685	N/A	0.999956669
MSS	MSS WS	SUN Sparcstation 20/50, 128 MB, 4GB	15,947	0.5	6	5.00	6.50	1	2	standby off-line	0.9995925659	1.0	0.999999991
ISS	FDDI CONCENTRATOR	FDDI Concentrator - Bay Networks 2914-04	100,000	0.5	6	5.00	6.50	1	2	standby off-line	0.9999350042	1.0	1.000000000
ISS	FDDI CONCENTRATOR	FDDI Concentrator - Bay Networks 2914-04	100,000	0.5	6	5.00	6.50	2	3	standby off-line	0.9999350042	1.0	1.000000000
ISS	FDDI SWITCH	PowerHub7000 - ALANTEC (4 FDDI cards & 3 pwr supply)	146,000	0.5	6	N/A	6.50	1	1	N/A	0.9999554814	N/A	0.999955481
													0.9998252984
		EOSD3970 Ao =	0.99983										
		EOSD3970 MDT =	0.35927										

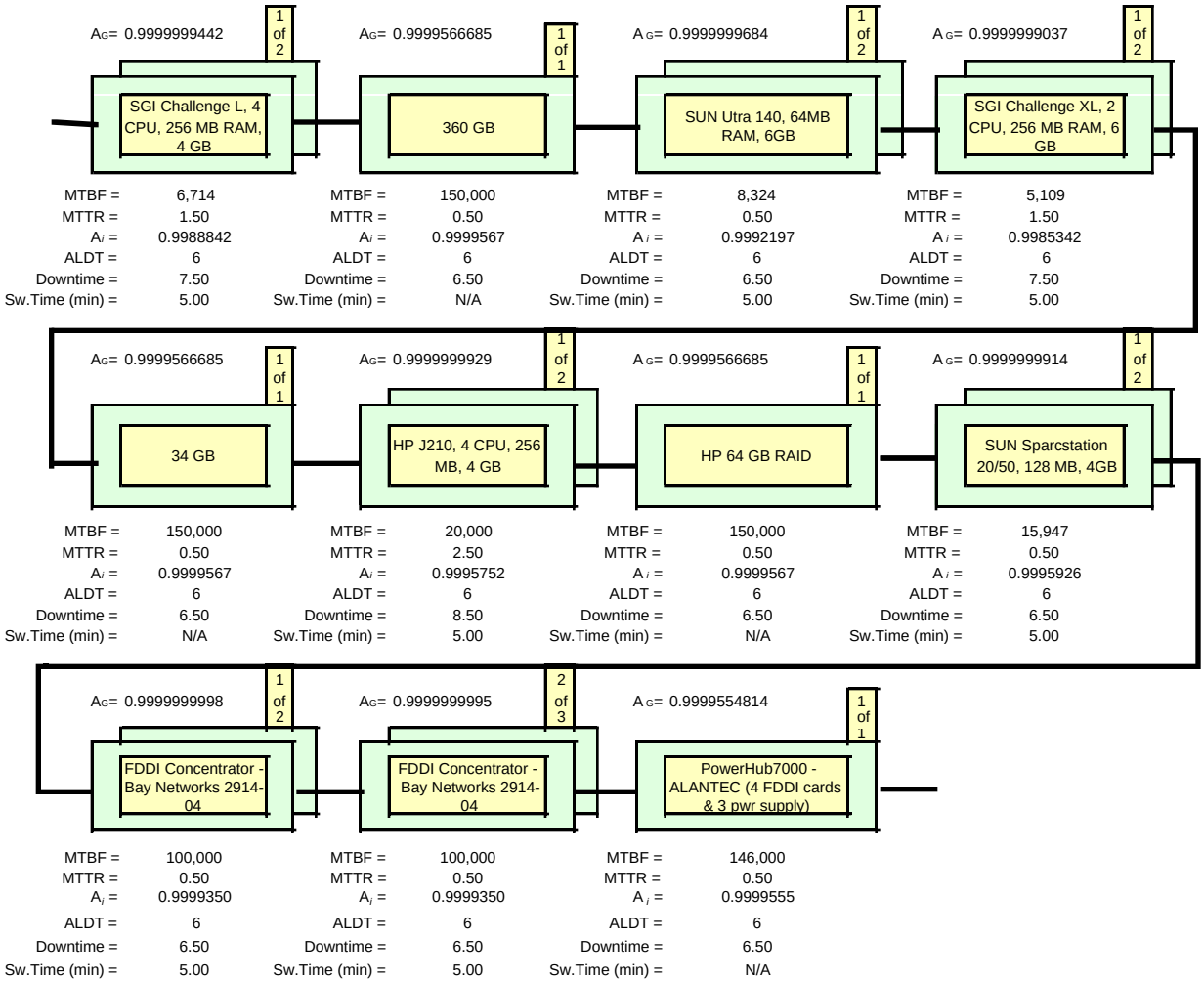
AG= 0.9999999442
1 of 2
SGI Challenge L, 4 CPU, 256 MB RAM, 4 GB
MTBF = 6,714
MTTR = 1.50
Ai = 0.9988842
ALDT = 6
Downtime = 7.50
Sw.Time (min) = 5.00
AG= 0.9999566685
1 of 1
360 GB
MTBF = 150,000
MTTR = 0.50
Ai = 0.9999567
ALDT = 6
Downtime = 6.50
Sw.Time (min) = N/A
AG= 0.9999999684
1 of 2
SUN Utra 140, 64MB RAM, 6GB
MTBF = 8,324
MTTR = 0.50
Ai = 0.9992197
ALDT = 6
Downtime = 6.50
Sw.Time (min) = 5.00
AG= 0.9999999037
1 of 2
SGI Challenge XL, 2 CPU, 256 MB RAM, 6 GB
MTBF = 5,109
MTTR = 1.50
Ai = 0.9985342
ALDT = 6
Downtime = 7.50
Sw.Time (min) = 5.00
AG= 0.9999566685
1 of 1
34 GB
MTBF = 150,000
MTTR = 0.50
Ai = 0.9999567
ALDT = 6
Downtime = 6.50
Sw.Time (min) = N/A
AG= 0.9999999929
1 of 2
HP J210, 4 CPU, 256 MB, 4 GB
MTBF = 20,000
MTTR = 2.50
Ai = 0.9995752
ALDT = 6
Downtime = 8.50
Sw.Time (min) = 5.00
AG= 0.9999566685
1 of 1
HP 64 GB RAID
MTBF = 150,000
MTTR = 0.50
Ai = 0.9999567
ALDT = 6
Downtime = 6.50
Sw.Time (min) = N/A
AG= 0.9999999914
1 of 2
SUN Sparcstation 20/50, 128 MB, 4GB
MTBF = 15,947
MTTR = 0.50
Ai = 0.9995926
ALDT = 6
Downtime = 6.50
Sw.Time (min) = 5.00
AG= 0.9999999998
1 of 2
FDDI Concentrator - Bay Networks 2914-04
MTBF = 100,000
MTTR = 0.50
Ai = 0.9999350
ALDT = 6
Downtime = 6.50
Sw.Time (min) = 5.00
AG= 0.9999999995
2 of 3
FDDI Concentrator - Bay Networks 2914-04
MTBF = 100,000
MTTR = 0.50
Ai = 0.9999350
ALDT = 6
Downtime = 6.50
Sw.Time (min) = 5.00
AG= 0.9999554814
1 of 1
PowerHub7000 - ALANTEC (4 FDDI cards & 3 pwr supply)
MTBF = 146,000
MTTR = 0.50
Ai = 0.9999555
ALDT = 6
Downtime = 6.50
Sw.Time (min) = N/A

EOSD 3980 Ao/MDT Analytical Results for EDC

EOSD3980: Function Of Local Data Order Submission (Ao>=.96, MDT<=4.0 hrs)

Subsystem Description	Equipment Description	Model/Part Number	MTBF (hour)	MTTR (hour)	Admin. Logistic Delay Time (hour)	Switchover Time (min)	Total Downtime (hour)	Number of Units Required (m)	Total Number Of Units (n)	Redundancy	Unit Availability (Ai)	P	Redundant Group Availability (m out of n)
Data Manag.	DATA SPECIALIST W/S	SUN Utra 140, 64MB RAM, 6GB	8,324	0.5	6	5.00	6.50	1	2	standby off-line	0.9992197347	1.0	0.999999968
ACM	APC SERVER	SGI Challenge L, 4 CPU, 256 MB RAM, 4 GB	6,714	1.5	6	5.00	7.50	1	2	standby off-line	0.9988841776	1.0	0.999999944
ACM	RAID DISK	360 GB	150,000	0.5	6	N/A	6.50	1	1	N/A	0.9999566685	N/A	0.999956669
ACM	OPS WORKSTATION	SUN Utra 140, 64MB RAM, 6GB	8,324	0.5	6	5.00	6.50	1	2	standby off-line	0.9992197347	1.0	0.999999968
MSS/CSS	MSS/CSS SERVER	HP J210, 4 CPU, 256 MB, 4 GB	20000	2.5	6	5.00	8.50	1	2	standby off-line	0.9995751805	1.0	0.999999993
MSS	RAID	HP 64 GB RAID	150,000	0.5	6	N/A	6.50	1	1	N/A	0.9999566685	N/A	0.999956669
MSS	MSS WS	SUN Sparcstation 20/50, 128 MB, 4GB	15,947	0.5	6	5.00	6.50	1	2	standby off-line	0.9995925659	1.0	0.999999991
ISS	FDDI CONCENTRATOR	FDDI Concentrator - Bay Networks 2914-04	100,000	0.5	6	5.00	6.50	1	2	standby off-line	0.9999350042	1.0	1.000000000
ISS	FDDI CONCENTRATOR	FDDI Concentrator - Bay Networks 2914-04	100,000	0.5	6	5.00	6.50	2	3	standby off-line	0.9999350042	1.0	1.000000000
ISS	FDDI SWITCH	PowerHub7000 - ALANTEC (4 FDDI cards & 3 pwr supply)	146,000	0.5	6	N/A	6.50	1	1	N/A	0.9999554814	N/A	0.999955481
													0.9998687204
		EOSD3980 Ao =	0.99987										
		EOSD3980 MDT =	0.39024										

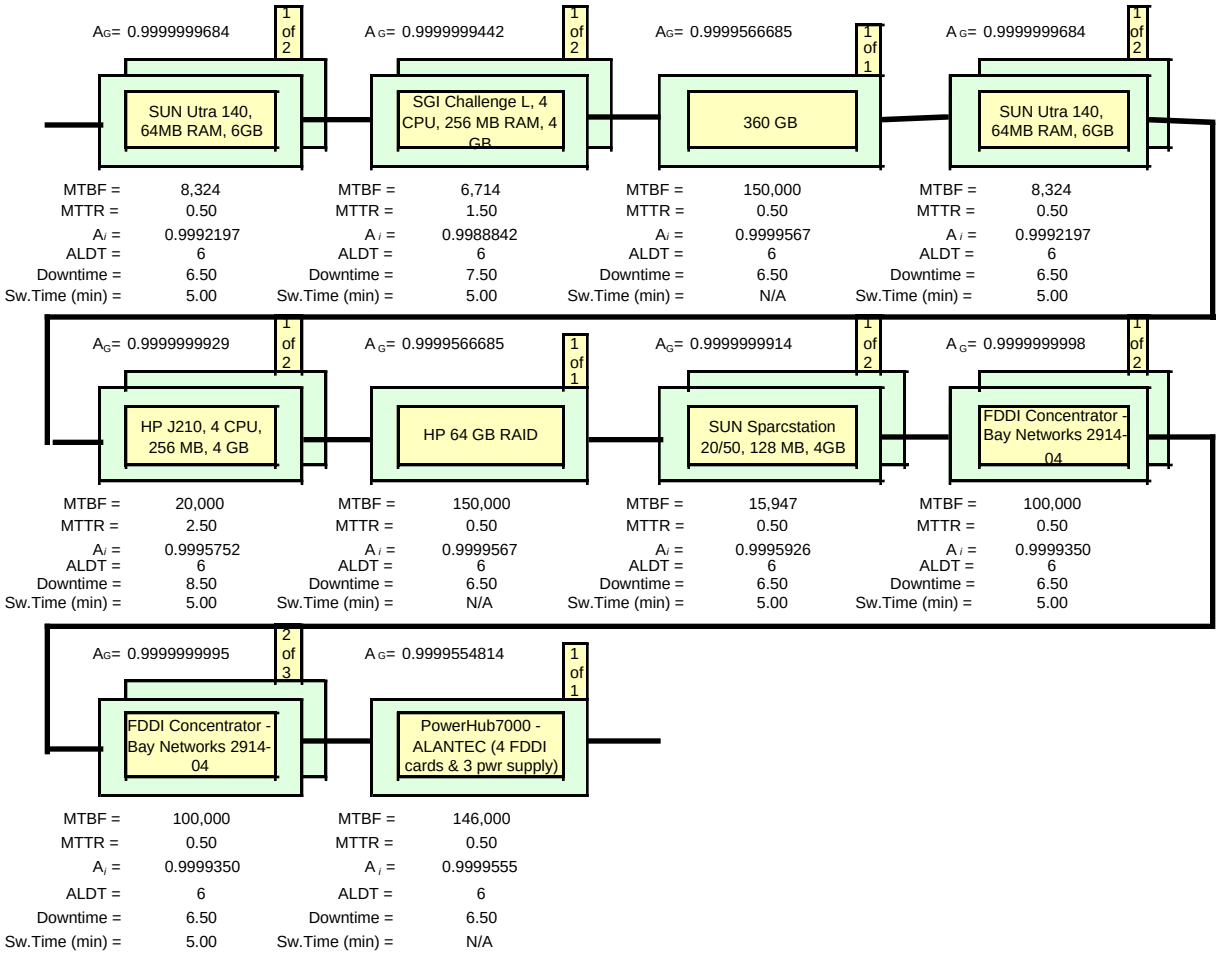
AG= 0.9999999684
1 of 2
SUN Utra 140, 64MB RAM, 6GB
MTBF = 8,324
MTTR = 0.50
Ai = 0.9992197
ALDT = 6
Downtime = 6.50
Sw.Time (min) = 5.00
AG= 0.9999999442
1 of 2
SGI Challenge L, 4 CPU, 256 MB RAM, 4 GB
MTBF = 6,714
MTTR = 1.50
Ai = 0.9988842
ALDT = 6
Downtime = 7.50
Sw.Time (min) = 5.00
AG= 0.9999566685
1 of 1
360 GB
MTBF = 150,000
MTTR = 0.50
Ai = 0.9999567
ALDT = 6
Downtime = 6.50
Sw.Time (min) = N/A
AG= 0.9999999684
1 of 2
SUN Utra 140, 64MB RAM, 6GB
MTBF = 8,324
MTTR = 0.50
Ai = 0.9992197
ALDT = 6
Downtime = 6.50
Sw.Time (min) = 5.00
AG= 0.9999999929
1 of 2
HP J210, 4 CPU, 256 MB, 4 GB
MTBF = 20,000
MTTR = 2.50
Ai = 0.9995752
ALDT = 6
Downtime = 8.50
Sw.Time (min) = 5.00
AG= 0.9999566685
1 of 1
HP 64 GB RAID
MTBF = 150,000
MTTR = 0.50
Ai = 0.9999567
ALDT = 6
Downtime = 6.50
Sw.Time (min) = N/A
AG= 0.9999999914
1 of 2
SUN Sparcstation 20/50, 128 MB, 4GB
MTBF = 15,947
MTTR = 0.50
Ai = 0.9995926
ALDT = 6
Downtime = 6.50
Sw.Time (min) = 5.00
AG= 0.9999999998
1 of 2
FDDI Concentrator - Bay Networks 2914-04
MTBF = 100,000
MTTR = 0.50
Ai = 0.9999350
ALDT = 6
Downtime = 6.50
Sw.Time (min) = 5.00
AG= 0.9999999995
2 of 3
FDDI Concentrator - Bay Networks 2914-04
MTBF = 100,000
MTTR = 0.50
Ai = 0.9999350
ALDT = 6
Downtime = 6.50
Sw.Time (min) = 5.00
AG= 0.9999554814
1 of 1
PowerHub7000 - ALANTEC (4 FDDI cards & 3 pwr supply)
MTBF = 146,000
MTTR = 0.50
Ai = 0.9999555
ALDT = 6
Downtime = 6.50
Sw.Time (min) = N/A

EOSD 3990 Ao/MDT Analytical Results for EDC

EOSD3990: Function Of Data Order Submission Across DAACs (Ao<=.96, MDT>=4.0 hrs)

Subsystem Description	Equipment Description	Model/Part Number	MTBF (hour)	MTTR (hour)	Admin. Logistic Delay Time (hour)	Switchover Time (min)	Total Downtime (hour)	Number of Units Required (m)	Total Number Of Units (n)	Redundancy	Unit Availability (Ai)	P	Redundant Group Availability (m out of n)
Data Manag.	DMG SERVER	K400, 2 CPU, 512 MB RAM, 8 GB, 8 mm	22,747	2.7	6	N/A	8.70	1	1	N/A	0.9996176782	N/A	0.999617678
Data Manag.	RAID DISK	HP 10 GB	150,000	0.5	6	N/A	6.50	1	1	N/A	0.9999566685	N/A	0.999956669
Data Manag.	DATA SPECIALIST W/S	SUN Utra 140, 64MB RAM, 6GB	8,324	0.5	6	5.00	6.50	1	2	standby off-line	0.9992197347	1.0	0.999999968
ACM	APC SERVER	SGI Challenge L, 4 CPU, 256 MB RAM, 4 GB	6,714	1.5	6	5.00	7.50	1	2	standby off-line	0.9988841776	1.0	0.999999944
ACM	RAID DISK	360 GB	150,000	0.5	6	N/A	6.50	1	1	N/A	0.9999566685	N/A	0.999956669
ACM	OPS WORKSTATION	SUN Utra 140, 64MB RAM, 6GB	8,324	0.5	6	5.00	6.50	1	2	standby off-line	0.9992197347	1.0	0.999999968
MSS/CSS	MSS/CSS SERVER	HP J210, 4 CPU, 256 MB, 4 GB	20000	2.5	6	5.00	8.50	1	2	standby off-line	0.9995751805	1.0	0.999999993
MSS	RAID	HP 64 GB RAID	150,000	0.5	6	N/A	6.50	1	1	N/A	0.9999566685	N/A	0.999956669
MSS	MSS WS	SUN Sparcstation 20/50, 128 MB, 4GB	15,947	0.5	6	5.00	6.50	1	2	standby off-line	0.9995925659	1.0	0.999999991
ISS	FDDI CONCENTRATOR	FDDI Concentrator - Bay Networks 2914-04	100,000	0.5	6	5.00	6.50	1	2	standby off-line	0.9999350042	1.0	1.000000000
ISS	FDDI CONCENTRATOR	FDDI Concentrator - Bay Networks 2914-04	100,000	0.5	6	5.00	6.50	2	3	standby off-line	0.9999350042	1.0	1.000000000
ISS	FDDI SWITCH	PowerHub7000 - ALANTEC (4 FDDI cards & 3 pwr supply)	146,000	0.5	6	N/A	6.50	1	1	N/A	0.9999554814	N/A	0.999955481
													0.9998687204
		EOSD3990 Ao =	0.99987										
		EOSD3990 MDT =	0.39024										

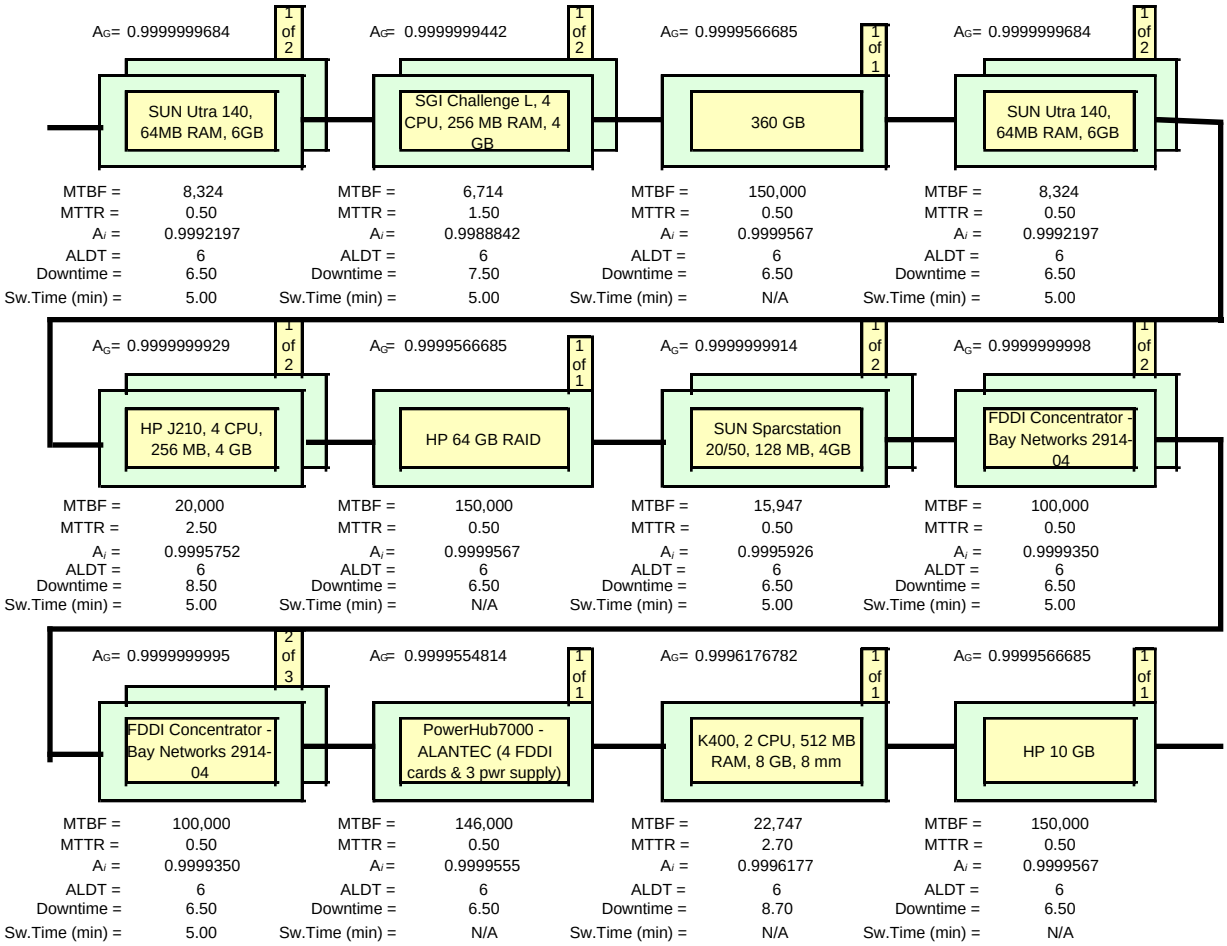
AG= 0.9999999684
1 of 2
SUN Utra 140, 64MB RAM, 6GB
MTBF = 8,324
MTTR = 0.50
Ai = 0.9992197
ALDT = 6
Downtime = 6.50
Sw.Time (min) = 5.00
AG= 0.9999999442
1 of 2
SGI Challenge L, 4 CPU, 256 MB RAM, 4 GB
MTBF = 6,714
MTTR = 1.50
Ai = 0.9988842
ALDT = 6
Downtime = 7.50
Sw.Time (min) = 5.00
AG= 0.9999566685
1 of 1
360 GB
MTBF = 150,000
MTTR = 0.50
Ai = 0.9999567
ALDT = 6
Downtime = 6.50
Sw.Time (min) = N/A
AG= 0.9999999684
1 of 2
SUN Utra 140, 64MB RAM, 6GB
MTBF = 8,324
MTTR = 0.50
Ai = 0.9992197
ALDT = 6
Downtime = 6.50
Sw.Time (min) = 5.00
AG= 0.9999999929
1 of 2
HP J210, 4 CPU, 256 MB, 4 GB
MTBF = 20,000
MTTR = 2.50
Ai = 0.9995752
ALDT = 6
Downtime = 8.50
Sw.Time (min) = 5.00
AG= 0.9999566685
1 of 1
HP 64 GB RAID
MTBF = 150,000
MTTR = 0.50
Ai = 0.9999567
ALDT = 6
Downtime = 6.50
Sw.Time (min) = N/A
AG= 0.9999999914
1 of 2
SUN Sparcstation 20/50, 128 MB, 4GB
MTBF = 15,947
MTTR = 0.50
Ai = 0.9995926
ALDT = 6
Downtime = 6.50
Sw.Time (min) = 5.00
AG= 0.9999999998
1 of 2
FDDI Concentrator - Bay Networks 2914-04
MTBF = 100,000
MTTR = 0.50
Ai = 0.9999350
ALDT = 6
Downtime = 6.50
Sw.Time (min) = 5.00
AG= 0.9999999995
2 of 3
FDDI Concentrator - Bay Networks 2914-04
MTBF = 100,000
MTTR = 0.50
Ai = 0.9999350
ALDT = 6
Downtime = 6.50
Sw.Time (min) = 5.00
AG= 0.9999554814
1 of 1
PowerHub7000 - ALANTEC (4 FDDI cards & 3 pwr supply)
MTBF = 146,000
MTTR = 0.50
Ai = 0.9999555
ALDT = 6
Downtime = 6.50
Sw.Time (min) = N/A
AG= 0.9996176782
1 of 1
K400, 2 CPU, 512 MB RAM, 8 GB, 8 mm
MTBF = 22,747
MTTR = 2.70
Ai = 0.9996177
ALDT = 6
Downtime = 8.70
Sw.Time (min) = N/A
AG= 0.9999566685
1 of 1
HP 10 GB
MTBF = 150,000
MTTR = 0.50
Ai = 0.9999567
ALDT = 6
Downtime = 6.50
Sw.Time (min) = N/A

EOSD 4000 Ao/MDT Analytical Results for EDC

EOSD4000: Function Of IMS Data Management and Maintenance Interface (Ao>=.96, MDT<=4.0 hrs)

Subsystem Description	Equipment Description	Model/Part Number	MTBF (hour)	MTTR (hour)	Admin. Logistic Delay Time (hour)	Switch over Time (min)	Total Downtime (hour)	Number of Units Required (m)	Total Number Of Units (n)	Redundancy	Unit Availability (Ai)	P	Redundant Group Availability (m out of n)
Data Manag.	DMG SERVER	K400, 2 CPU, 512 MB RAM, 8 GB, 8 mm	22,747	2.7	6	N/A	8.70	1	1	N/A	0.9996176782	N/A	0.999617678
Data Manag.	RAID DISK	HP 10 GB	150,000	0.5	6	N/A	6.50	1	1	N/A	0.9999566685	N/A	0.999956669
Data Manag.	DATA SPECIALIST W/S	SUN Utra 140, 64MB RAM, 6GB	8,324	0.5	6	5.00	6.50	1	2	standby off-line	0.9992197347	1.0	0.999999968
ACM	OPS WORKSTATION	SUN Utra 140, 64MB RAM, 6GB	8,324	0.5	6	5.00	6.50	1	2	standby off-line	0.9992197347	1.0	0.999999968
DRP	DBMS SERVER	SGI Challenge XL, 2 CPU, 256 MB RAM, 6 GB	5,109	1.5	6	5.00	7.50	1	2	standby off-line	0.9985341542	1.0	0.999999904
DRP	RAID DISK	34 GB	150,000	0.5	6	N/A	6.50	1	1	N/A	0.9999566685	N/A	0.999956669
MSS/CSS	MSS/CSS SERVER	HP J210, 4 CPU, 256 MB, 4 GB	20000	2.5	6	5.00	8.50	1	2	standby off-line	0.9995751805	1.0	0.999999993
MSS	RAID	HP 64 GB RAID	150,000	0.5	6	N/A	6.50	1	1	N/A	0.9999566685	N/A	0.999956669
MSS	MSS WS	SUN Sparcstation 20/50, 128 MB, 4GB	15,947	0.5	6	5.00	6.50	1	2	standby off-line	0.9995925659	1.0	0.999999991
ISS	FDDI CONCENTRATOR	FDDI Concentrator - Bay Networks 2914-04	100,000	0.5	6	5.00	6.50	1	2	standby off-line	0.9999350042	1.0	1.000000000
ISS	FDDI CONCENTRATOR	FDDI Concentrator - Bay Networks 2914-04	100,000	0.5	6	5.00	6.50	2	3	standby off-line	0.9999350042	1.0	1.000000000
ISS	FDDI SWITCH	PowerHub7000 - ALANTEC (4 FDDI cards & 3 pwr supply)	146,000	0.5	6	N/A	6.50	1	1	N/A	0.9999554814	N/A	0.999955481
													0.9998687115

EOSD4000 Ao =	0.99987
EOSD4000 MDT =	0.45481

EOSD 4000 Ao/MDT Analytical Results for EDC

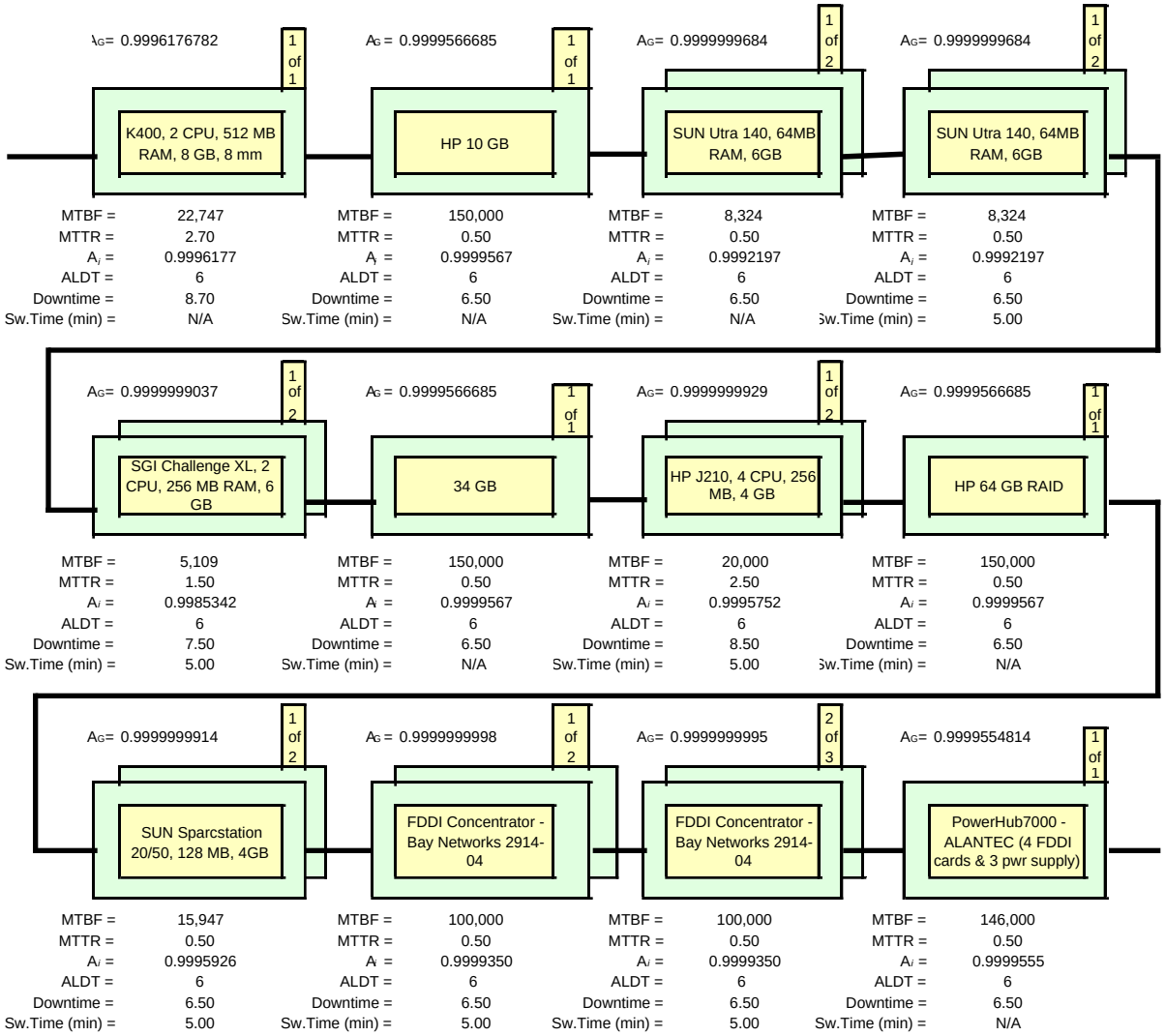

EOSD 3920 Ao/MDT Analytical Results for ASF

EOSD3920:Function of Archiving And Distributing Data (Ao>=.980, MDT<=2.0 hrs)

Subsystem Description	Equipment Description	Model/Part Number	MTBF (hour)	MTTR (hour)	Admin. Logistic Delay Time (hour)	Switchover Time (min)	Total Downtime (hour)	Number of Units Required (m)	Total Number Of Units (n)	Redundancy	Unit Availability (Ai)	P
ACM	APC SERVER	SGI Challenge XL, 6 CPU, 512 MB RAM, 6 GB	4,290	1.5	6	5.00	7.50	1	2	standby off-line	0.9982547993	1.0
ACM	RAID DISK	108 GB	150,000	0.5	6	N/A	6.50	1	1	N/A	0.9999566685	N/A
ACM	OPS WORKSTATION	SUN Utra 140, 64MB RAM, 6GB	8,324	0.5	6	5.00	6.50	1	2	standby off-line	0.9992197347	1.0
DIP	DISTRIBUTION SERVER	SUN Ultra 4-slot, 256 MB RAM, 4 GB	8,300	1.0	6	5.00	7.00	1	2	standby off-line	0.9991573372	1.0
DIP	RAID DISK	120 GB	150,000	0.5	6	N/A	6.50	1	1	N/A	0.9999566685	N/A
DIP	TAPE STACKER	3, 8mm Drives w/stacker - Exabyte	160,000	0.3	6	N/A	6.25	1	1	N/A	0.9999609390	N/A
DIP	TAPE STACKER	3, 4mm Drives w/stacker - Exabyte	146,000	0.5	6	N/A	6.50	1	1	N/A	0.9999554814	N/A
DIP	CD ROM (1)	CD ROM, Recordable, JVC	58,392	0.5	6	N/A	6.50	1	1	N/A	0.9998886958	N/A
DIP	TAPE DRIVE (1)	3480/3490 TAPE DRIVE	140,000	0.5	6	N/A	6.50	1	1	N/A	0.9999535736	N/A
DIP	TAPE DRIVE (1)	6250 BPI Tape Drive	66,868	1.0	6	N/A	7.00	1	1	N/A	0.9998953271	N/A
DRP	FSMS SERVER	SGI Challenge XL, 2 CPU, 256 MB RAM, 6 GB	5,109	1.5	6	5.00	7.50	1	2	standby off-line	0.9985341542	1.0
DRP	RAID DISK	17 GB	150,000	0.5	6	N/A	6.50	1	1	N/A	0.9999566685	N/A
DRP	ARCHIVE ROBOT(2)	EMASS AML	11,687	1.0	6	N/A	7.00	1	1	N/A	0.9994014024	N/A
DRP	TAPE DRIVE (2)	EMASS 3590 NTP	16,667	1.0	6	N/A	7.00	4	4	N/A	0.9995801847	N/A
DRP	DBMS SERVER	SGI Challenge XL, 2 CPU, 256 MB RAM, 6 GB	5,109	1.5	6	5.00	7.50	1	2	standby off-line	0.9985341542	1.0
DRP	RAID DISK	17 GB	150,000	0.5	6	N/A	6.50	1	1	N/A	0.9999566685	N/A
DDS	DOCUMENT SERVER	SUN Ultra 4-slot, 256 MB RAM, 4 GB	8,300	0.5	6	5.00	6.50	1	2	standby off-line	0.9992174803	1.0
MSS/CSS	MSS/CSS SERVER	HP J210, 4 CPU, 384 MB, 4 GB	20000	2.5	6	5.00	8.50	1	2	standby off-line	0.9995751805	1.0
MSS	RAID	HP 28 GB RAID	150,000	0.5	6	N/A	6.50	1	1	N/A	0.9999566685	N/A
MSS	MSS WS	SUN Sparcstation 20/50, 128 MB, 4GB	15,947	0.5	6	5.00	6.50	1	2	standby off-line	0.9995925659	1.0
ISS	FDDI CONCENTRATOR	FDDI Concentrator - Bay Networks 2914-04	100,000	0.5	6	5.00	6.50	1	2	standby off-line	0.9999350042	1.0
ISS	FDDI CONCENTRATOR	FDDI Concentrator - Bay Networks 2914-04	100,000	0.5	6	5.00	6.50	1	2	standby off-line	0.9999350042	1.0
ISS	FDDI CONCENTRATOR	FDDI Concentrator - Bay Networks 2914-04	100,000	0.5	6	5.00	6.50	2	3	standby off-line	0.9999350042	1.0
ISS	FDDI SWITCH	PowerHub7000 - ALANTEC (4 FDDI cards & 3 pwr supply)	146,000	0.5	6	N/A	6.50	1	1	N/A	0.9999554814	N/A

EOSD3920 Ao = 0.99712
EOSD3920 MDT = 1.25887

Note: (1) Peripherals are 25% Duty Cycle
(2) Archive Robot and Drives Failure Rates are 60% Duty Cyle

EOSD 3920 Ao/MDT Analytical Results for ASF (continued)

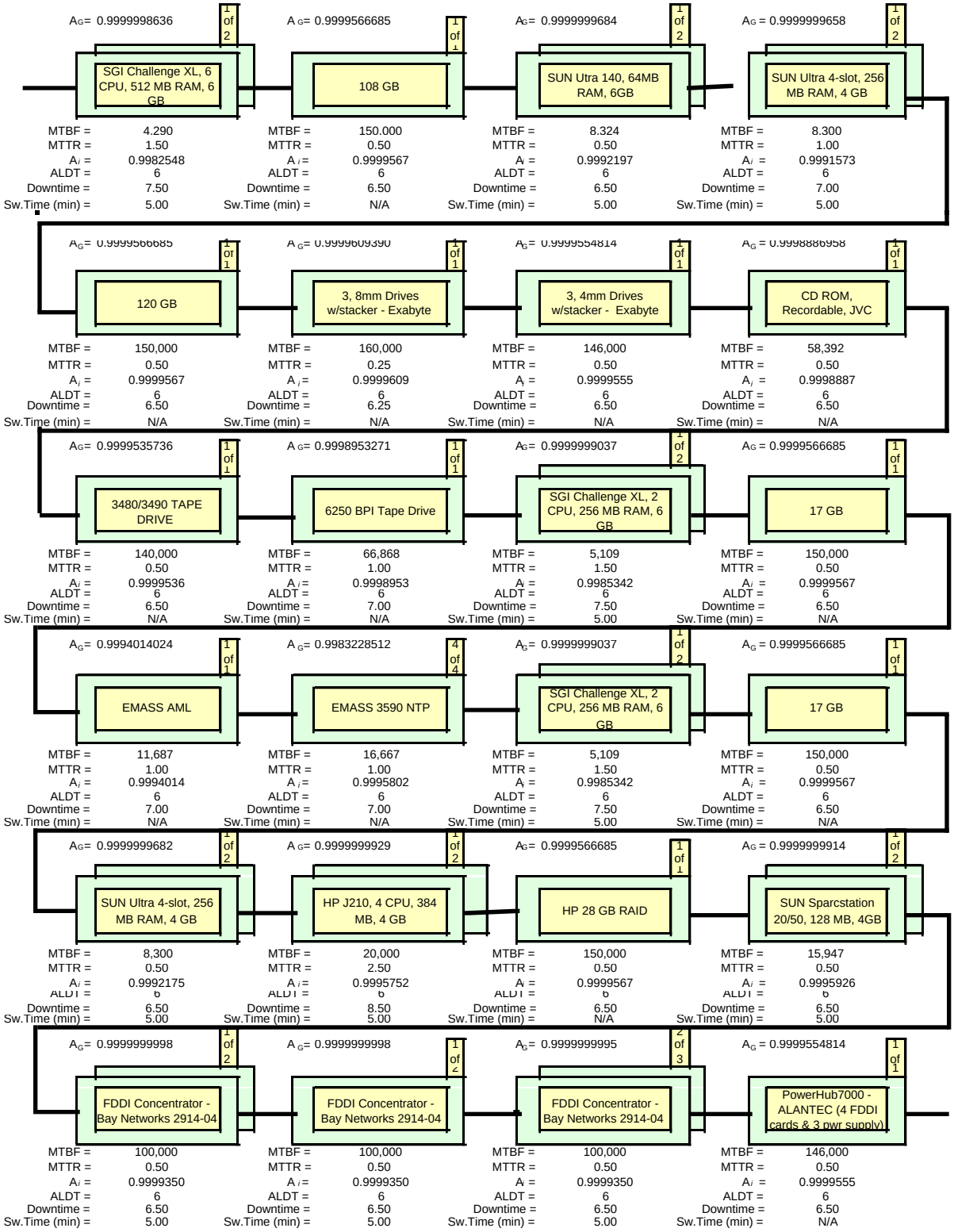

EOSD 3930 Ao/MDT Analytical Results for ASF

EOSD3930: User Interfaces to IMS Services at Individual DAAC Site (Ao>=.993, MDT<=2.0 hrs)

Subsystem Description	Equipment Description	Model/Part Number	MTBF (hour)	MTTR (hour)	Admin. Logistic Delay Time (hour)	Switchover Time (min)	Total Downtime (hour)	Number of Units Required (m)	Total Number Of Units (n)	Redundancy	Unit Availability (Ai)	P	Redundant Group Availability (m out of n)
Data Manag.	DMG SERVER	K400, 2 CPU, 512 MB RAM, 8 GB, 8 mm	22,747	2.7	6	N/A	8.70	1	1	N/A	0.9996176782	N/A	0.999617678
Data Manag.	RAID DISK	HP 10 GB	150,000	0.5	6	N/A	6.50	1	1	N/A	0.9999566685	N/A	0.999956669
Data Manag.	DBA OPS WORKSTATION	HP C100, 64 MB RAM, 6 GB	35,700	2.5	6	N/A	8.50	1	1	N/A	0.9997619614	N/A	0.999761961
ACM	APC SERVER	SGI Challenge XL, 6 CPU, 512 MB RAM, 6 GB	4,290	1.5	6	5.00	7.50	1	2	standby off-line	0.9982547993	1.0	0.999999864
ACM	RAID DISK	108 GB	150,000	0.5	6	N/A	6.50	1	1	N/A	0.9999566685	N/A	0.999956669
ACM	OPS WORKSTATION	SUN Utra 140, 64MB RAM, 6GB	8,324	0.5	6	5.00	6.50	1	2	standby off-line	0.9992197347	1.0	0.999999968
DRP	ARCHIVE ROBOT(1)	EMASS AML	11,687	1.0	6	N/A	7.00	1	1	N/A	0.9994014024	N/A	0.999401402
DRP	TAPE DRIVE (1)	EMASS 3590 NTP	16,667	1.0	6	N/A	7.00	4	4	N/A	0.9995801847	N/A	0.998322851
DRP	DBMS SERVER	SUN Ultra 4-slot, 256 MB RAM, 4 GB	8,300	1.5	6	5.00	7.50	1	2	standby off-line	0.9990972013	1.0	0.999999963
DRP	RAID DISK	120 GB	150,000	0.5	6	N/A	6.50	1	1	N/A	0.9999566685	N/A	0.999956669
MSS/CSS	MSS/CSS SERVER	HP J210, 4 CPU, 256 MB, 4 GB	20000	2.5	6	5.00	8.50	1	2	standby off-line	0.9995751805	1.0	0.999999993
MSS	RAID	HP 28 GB RAID	150,000	0.5	6	N/A	6.50	1	1	N/A	0.9999566685	N/A	0.999956669
MSS	MSS WS	SUN Sparcstation 20/50, 128 MB, 4GB	15,947	0.5	6	5.00	6.50	1	2	standby off-line	0.9995925659	1.0	0.999999991
ISS	FDDI CONCENTRATOR	FDDI Concentrator - Bay Networks 2914-04	100,000	0.5	6	5.00	6.50	1	2	standby off-line	0.9999350042	1.0	1.000000000
ISS	FDDI CONCENTRATOR	FDDI Concentrator - Bay Networks 2914-04	100,000	0.5	6	5.00	6.50	2	3	standby off-line	0.9999350042	1.0	1.000000000
ISS	FDDI SWITCH	PowerHub7000 - ALANTEC (4 FDDI cards & 3 pwr supply)	146,000	0.5	6	N/A	6.50	1	1	N/A	0.9999554814	N/A	0.999955481
													0.9975509325
		EOSD3930 Ao =	0.99755										
		EOSD3930 MDT =	1.59726										

Note: (1) Archive Robot and Tape Drives are 60% Duty Cycle

EOSD 3930 Ao/MDT Analytical Results for ASF (continued)

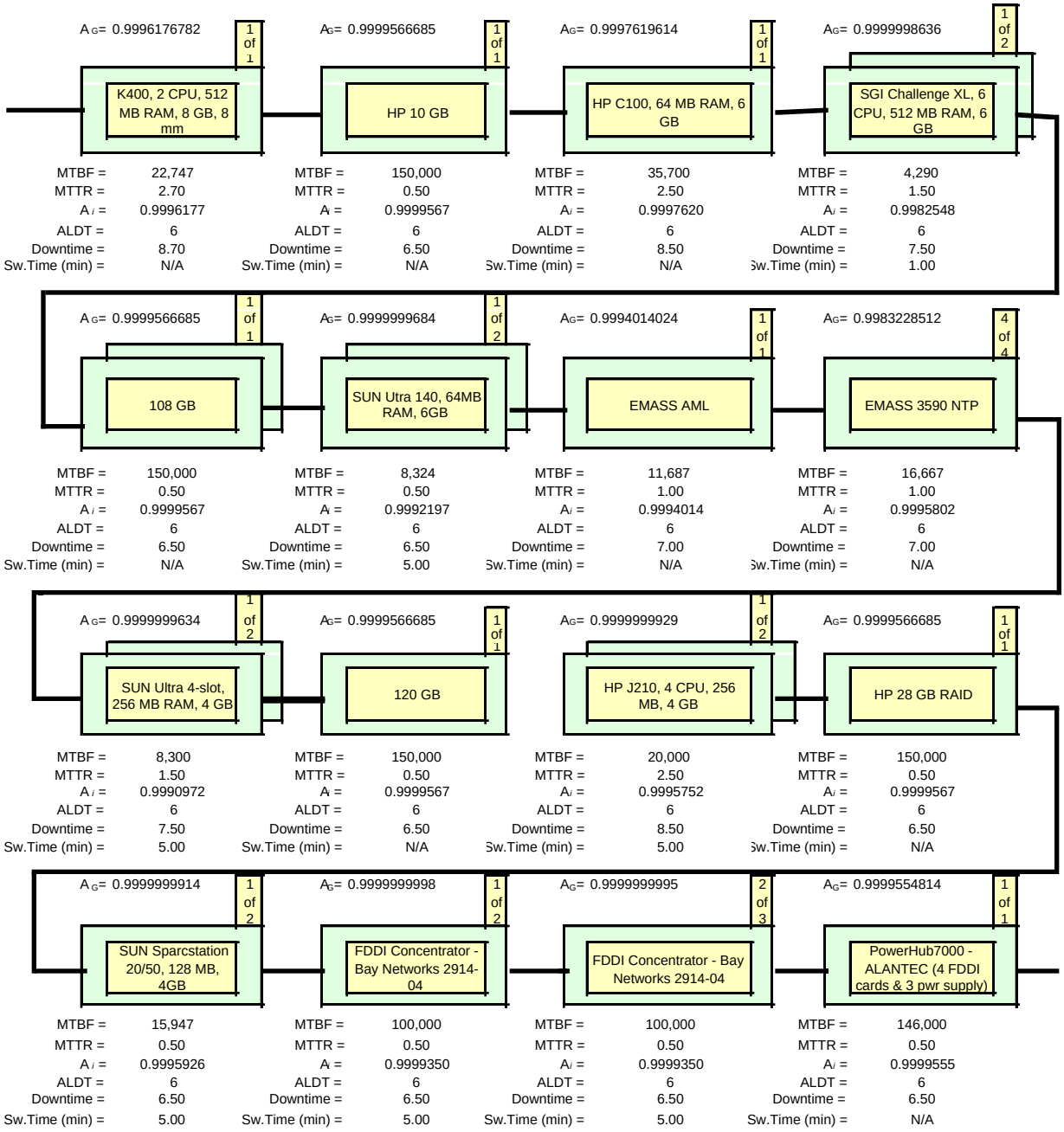

EOSD 3940 Ao/MDT Analytical Results for ASF

EOSD3940: Function Of Information Searches On The ECS Directory(Ao>=.993, MDT<=2.0 hrs)

Subsystem Description	Equipment Description	Model/Part Number	MTBF (hour)	MTTR (hour)	Admin. Logistic Delay Time (hour)	Switchover Time (min)	Total Downtime (hour)	Number of Units Required (m)	Total Number Of Units (n)	Redundancy	Unit Availability (Ai)	P	Redundant Group Availability (m out of n)
Data Manag.	DMG SERVER	K400, 2 CPU, 512 MB RAM, 8 GB, 8 mm	22,747	2.7	6	N/A	8.70	1	1	N/A	0.9996176782	N/A	0.999617678
Data Manag.	RAID DISK	HP 10 GB	150,000	0.5	6	N/A	6.50	1	1	N/A	0.9999566685	N/A	0.999956669
Data Manag.	DBA OPS WORKSTATION	HP C100, 64 MB RAM, 6 GB	35,700	2.5	6	N/A	8.50	1	1	N/A	0.9997619614	N/A	0.999761961
ACM	APC SERVER	SGI Challenge XL, 6 CPU, 512 MB RAM, 6 GB	4,290	1.5	6	5.00	7.50	1	2	standby off-line	0.9982547993	1.0	0.999999864
ACM	RAID DISK	108 GB	150,000	0.5	6	N/A	6.50	1	1	N/A	0.9999566685	N/A	0.999956669
ACM	OPS WORKSTATION	SUN Utra 140, 64MB RAM, 6GB	8,324	0.5	6	5.00	6.50	1	2	standby off-line	0.9992197347	1.0	0.999999968
MSS/CSS	MSS/CSS SERVER	HP J210, 4 CPU, 256 MB, 4 GB	20000	2.5	6	5.00	8.50	1	2	standby off-line	0.9995751805	1.0	0.999999993
MSS	RAID	HP 28 GB RAID	150,000	0.5	6	N/A	6.50	1	1	N/A	0.9999566685	N/A	0.999956669
MSS	MSS WS	SUN Sparcstation 20/50, 128 MB, 4GB	15,947	0.5	6	5.00	6.50	1	2	standby off-line	0.9995925659	1.0	0.999999991
ISS	FDDI CONCENTRATOR	FDDI Concentrator - Bay Networks 2914-04	100,000	0.5	6	5.00	6.50	1	2	standby off-line	0.9999350042	1.0	1.000000000
ISS	FDDI CONCENTRATOR	FDDI Concentrator - Bay Networks 2914-04	100,000	0.5	6	5.00	6.50	2	3	standby off-line	0.9999350042	1.0	1.000000000
ISS	FDDI SWITCH	PowerHub7000 - ALANTEC (4 FDDI cards & 3 pwr supply)	146,000	0.5	6	N/A	6.50	1	1	N/A	0.9999554814	N/A	0.999955481
													0.9998686399

EOSD3940 Ao =	0.99987
EOSD3940 MDT =	0.33921

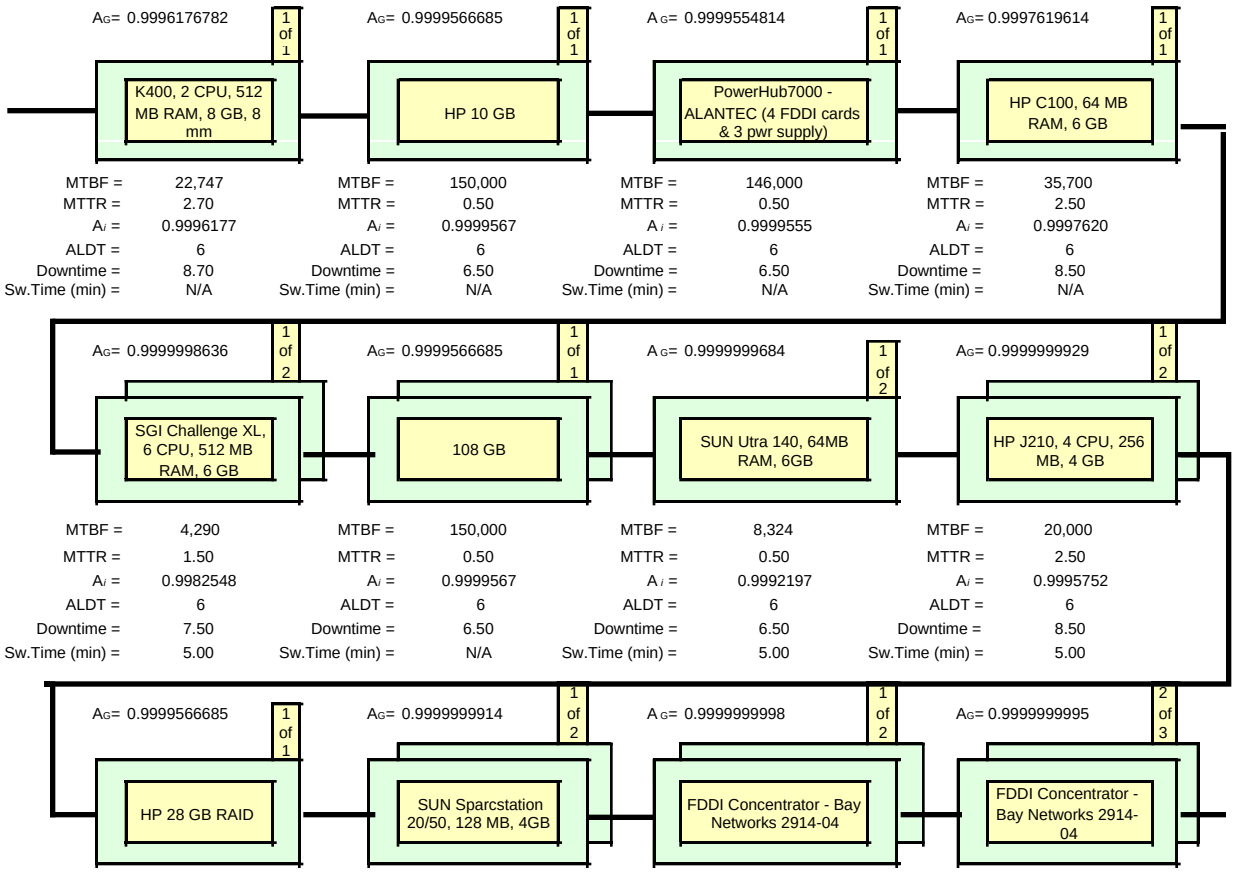
AG= 0.9996176782
1 of 1
K400, 2 CPU, 512 MB RAM, 8 GB, 8 mm
MTBF = 22,747
MTTR = 2.70
Ai = 0.9996177
ALDT = 6
Downtime = 8.70
Sw.Time (min) = N/A
AG= 0.9999566685
1 of 1
HP 10 GB
MTBF = 150,000
MTTR = 0.50
Ai = 0.9999567
ALDT = 6
Downtime = 6.50
Sw.Time (min) = N/A
AG= 0.9999554814
1 of 1
PowerHub7000 - ALANTEC (4 FDDI cards & 3 pwr supply)
MTBF = 146,000
MTTR = 0.50
Ai = 0.9999555
ALDT = 6
Downtime = 6.50
Sw.Time (min) = N/A
AG= 0.9997619614
1 of 1
HP C100, 64 MB RAM, 6 GB
MTBF = 35,700
MTTR = 2.50
Ai = 0.9997620
ALDT = 6
Downtime = 8.50
Sw.Time (min) = N/A
AG= 0.9999998636
1 of 2
SGI Challenge XL, 6 CPU, 512 MB RAM, 6 GB
MTBF = 4,290
MTTR = 1.50
Ai = 0.9982548
ALDT = 6
Downtime = 7.50
Sw.Time (min) = 5.00
AG= 0.9999566685
1 of 1
108 GB
MTBF = 150,000
MTTR = 0.50
Ai = 0.9999567
ALDT = 6
Downtime = 6.50
Sw.Time (min) = N/A
AG= 0.9999999684
1 of 2
SUN Utra 140, 64MB RAM, 6GB
MTBF = 8,324
MTTR = 0.50
Ai = 0.9992197
ALDT = 6
Downtime = 6.50
Sw.Time (min) = 5.00
AG= 0.9999999929
1 of 2
HP J210, 4 CPU, 256 MB, 4 GB
MTBF = 20,000
MTTR = 2.50
Ai = 0.9995752
ALDT = 6
Downtime = 8.50
Sw.Time (min) = 5.00
AG= 0.9999566685
1 of 1
HP 28 GB RAID
MTBF = 150,000
MTTR = 0.50
Ai = 0.9999567
ALDT = 6
Downtime = 6.50
Sw.Time (min) = N/A
AG= 0.9999999914
1 of 2
SUN Sparcstation 20/50, 128 MB, 4GB
MTBF = 15,947
MTTR = 0.50
Ai = 0.9995926
ALDT = 6
Downtime = 6.50
Sw.Time (min) = 5.00
AG= 0.9999999998
1 of 2
FDDI Concentrator - Bay Networks 2914-04
MTBF = 100,000
MTTR = 0.50
Ai = 0.9999350
ALDT = 6
Downtime = 6.50
Sw.Time (min) = 5.00
AG= 0.9999999995
2 of 3
FDDI Concentrator - Bay Networks 2914-04
MTBF = 100,000
MTTR = 0.50
Ai = 0.9999350
ALDT = 6
Downtime = 6.50
Sw.Time (min) = 5.00

EOSD 3960 Ao/MDT Analytical Results for ASF

EOSD3960:Function Of MetaData Ingest and Update (Ao>=.96, MDT<=4.0 hrs)

Subsystem Description	Equipment Description	Model/Part Number	MTBF (hour)	MTTR (hour)	Admin. Logistic Delay Time (hour)	Switchover Time (min)	Total Downtime (hour)	Number of Units Required (m)	Total Number Of Units (n)	Redundancy	Unit Availability (Ai)	P	Redundant Group Availability (m out of n)
Data Manag.	DATA SPECIALIST W/S	SUN Utra 140, 64MB RAM, 6GB	8,324	0.5	6	5.00	6.50	1	2	standby off-line	0.9992197347	1.0	0.999999968
ACM	APC SERVER	SGI Challenge XL, 6 CPU, 512 MB RAM, 6 GB	4,290	1.5	6	5.00	7.50	1	2	standby off-line	0.9982547993	1.0	0.999999864
ACM	RAID DISK	108 GB	150,000	0.5	6	N/A	6.50	1	1	N/A	0.9999566685	N/A	0.999956669
ACM	OPS WORKSTATION	SUN Utra 140, 64MB RAM, 6GB	8,324	0.5	6	5.00	6.50	1	2	standby off-line	0.9992197347	1.0	0.999999968
DIP	DISTRIBUTION SERVER	SUN Ultra 4-slot, 256 MB RAM, 4 GB	8,300	1.0	6	5.00	7.00	1	2	standby off-line	0.9991573372	1.0	0.999999966
DIP	RAID DISK	120 GB	150,000	0.5	6	N/A	6.50	1	1	N/A	0.9999566685	N/A	0.999956669
DRP	ARCHIVE ROBOT(1)	EMASS AML	11,687	1.0	6	N/A	7.00	1	1	N/A	0.9994014024	N/A	0.999401402
DRP	TAPE DRIVE (1)	EMASS 3590 NTP	16,667	1.0	6	N/A	7.00	4	4	N/A	0.9995801847	N/A	0.998322851
DRP	DBMS SERVER	SGI Challenge XL, 2 CPU, 256 MB RAM, 6 GB	5,109	1.5	6	5.00	7.50	1	2	standby off-line	0.9985341542	1.0	0.999999904
DRP	RAID DISK	120 GB	150,000	0.5	6	N/A	6.50	1	1	N/A	0.9999566685	N/A	0.999956669
MSS/CSS	MSS/CSS SERVER	HP J210, 4 CPU, 256 MB, 4 GB	20000	2.5	6	5.00	8.50	1	2	standby off-line	0.9995751805	1.0	0.999999993
MSS	RAID	HP 28 GB RAID	150,000	0.5	6	N/A	6.50	1	1	N/A	0.9999566685	N/A	0.999956669
MSS	MSS WS	SUN Sparcstation 20/50, 128 MB, 4GB	15,947	0.5	6	5.00	6.50	1	2	standby off-line	0.9995925659	1.0	0.999999991
ISS	FDDI CONCENTRATOR	FDDI Concentrator - Bay Networks 2914-04	100,000	0.5	6	5.00	6.50	1	2	standby off-line	0.9999350042	1.0	1.000000000
ISS	FDDI CONCENTRATOR	FDDI Concentrator - Bay Networks 2914-04	100,000	0.5	6	5.00	6.50	2	3	standby off-line	0.9999350042	1.0	1.000000000
ISS	FDDI SWITCH	PowerHub7000 - ALANTEC (4 FDDI cards & 3 pwr supply)	146,000	0.5	6	N/A	6.50	1	1	N/A	0.9999554814	N/A	0.999955481
													0.9975076135
		EOSD3960 Ao =	0.99751										
		EOSD3960 MDT =	1.32858										

Note: (1) Archive Robot and Tape Drives are 60% Duty Cycle

EOSD 3960 Ao/MDT Analytical Results for ASF (continued)

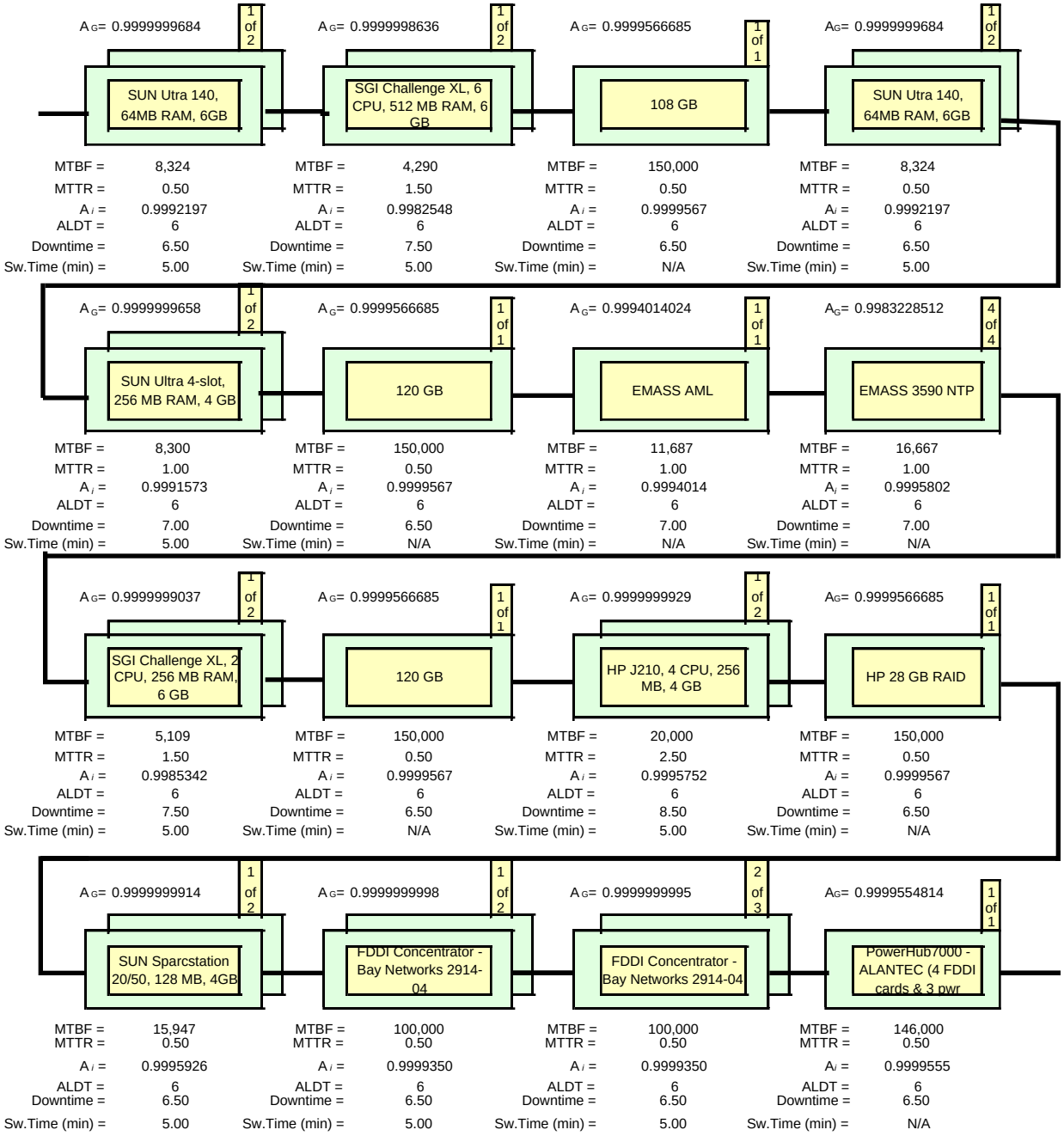

EOSD 3970 Ao/MDT Analytical Results for ASF

EOSD3970: Function Of Info. Searches On Local Holdings (Ao>=.96, MDT<=4.0 hrs)

Subsystem Description	Equipment Description	Model/Part Number	MTBF (hour)	MTTR (hour)	Admin. Logistic Delay Time (hour)	Switch over Time (min)	Total Downtime (hour)	Number of Units Required (m)	Total Number Of Units (n)	Redundancy	Unit Availability (Ai)	P	Redundant Group Availability (m out of n)
ACM	APC SERVER	SGI Challenge XL, 6 CPU, 512 MB RAM, 6 GB	4,290	1.5	6	5.00	7.50	1	2	standby off-line	0.9982547993	1.0	0.999999864
ACM	RAID DISK	161 GB	150,000	0.5	6	N/A	6.50	1	1	N/A	0.9999566685	N/A	0.999956669
ACM	OPS WORKSTATION	SUN Utra 140, 64MB RAM, 6GB	8,324	0.5	6	5.00	6.50	1	2	standby off-line	0.9992197347	1.0	0.999999968
DRP	ARCHIVE ROBOT(1)	EMASS AML	11,687	1.0	6	N/A	7.00	1	1	N/A	0.9994014024	N/A	0.999401402
DRP	TAPE DRIVE (1)	EMASS 3590 NTP	16,667	1.0	6	N/A	7.00	4	4	N/A	0.9995801847	N/A	0.998322851
DRP	DBMS SERVER	SGI Challenge XL, 2 CPU, 256 MB RAM, 6 GB	5,109	1.5	6	5.00	7.50	1	2	standby off-line	0.9985341542	1.0	0.999999904
DRP	RAID	17 GB RAID	150,000	0.5	6	N/A	6.50	1	1	N/A	0.9999566685	N/A	0.999956669
MSS/CSS	MSS/CSS SERVER	HP J210, 4 CPU, 256 MB, 4 GB	20000	2.5	6	5.00	8.50	1	2	standby off-line	0.9995751805	1.0	0.999999993
MSS	RAID	HP 28 GB RAID	150,000	0.5	6	N/A	6.50	1	1	N/A	0.9999566685	N/A	0.999956669
MSS	MSS WS	SUN Sparcstation 20/50, 128 MB, 4GB	15,947	0.5	6	5.00	6.50	1	2	standby off-line	0.9995925659	1.0	0.999999991
ISS	FDDI CONCENTRATOR	FDDI Concentrator - Bay Networks 2914-04	100,000	0.5	6	5.00	6.50	1	2	standby off-line	0.9999350042	1.0	1.000000000
ISS	FDDI CONCENTRATOR	FDDI Concentrator - Bay Networks 2914-04	100,000	0.5	6	5.00	6.50	2	3	standby off-line	0.9999350042	1.0	1.000000000
ISS	FDDI SWITCH	PowerHub7000 - ALANTEC (4 FDDI cards & 3 pwr supply)	146,000	0.5	6	N/A	6.50	1	1	N/A	0.9999554814	N/A	0.999955481
													0.9975508729
		EOSD3970 Ao =	0.99755										
		EOSD3970 MDT =	1.46387										

Note: (1) Archive Robot and Tape Drives are 60% Duty Cycle

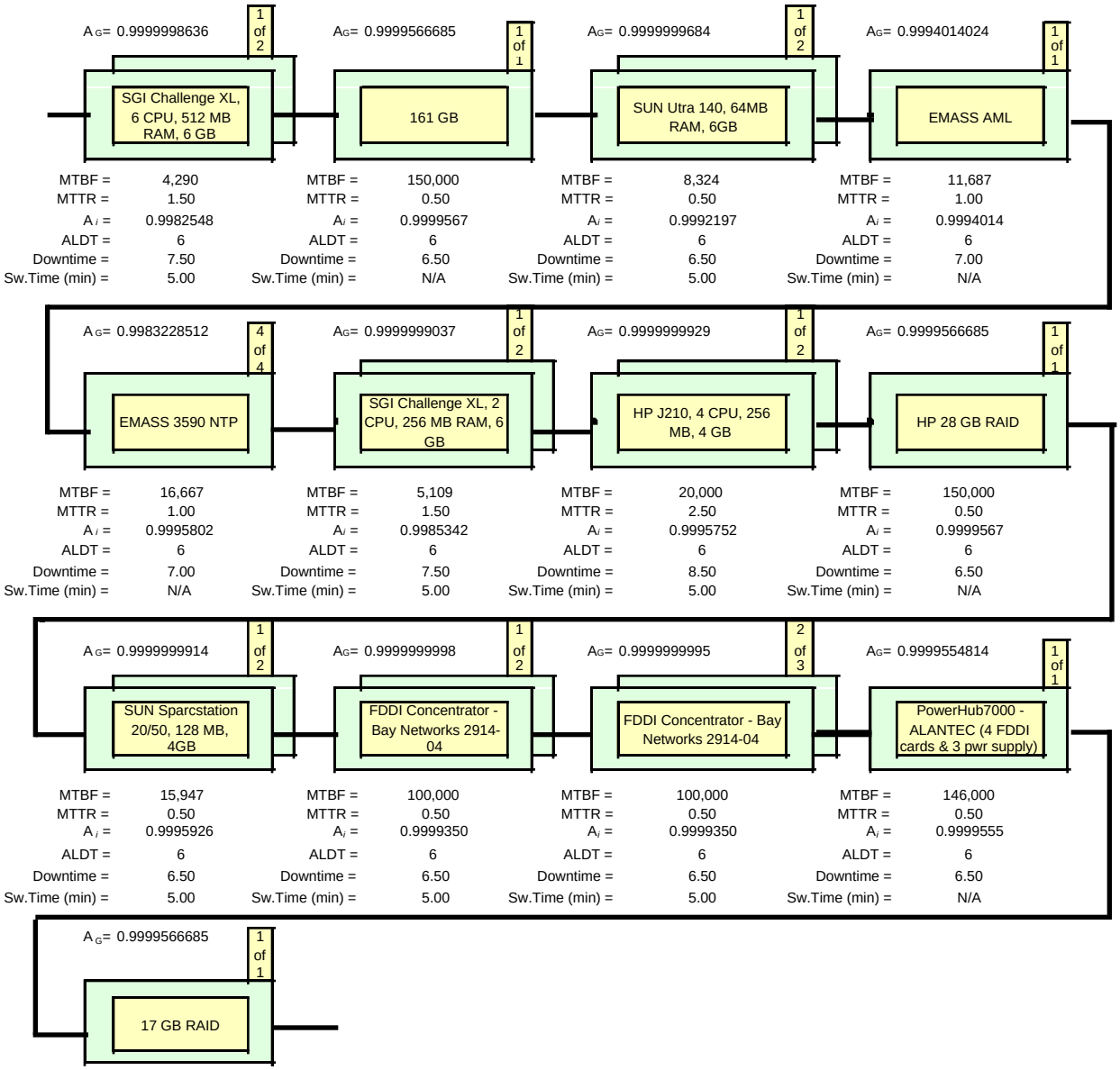
A G= 0.9999998636
1 of 2
SGI Challenge XL, 6 CPU, 512 MB RAM, 6 GB
MTBF = 4,290
MTTR = 1.50
A i = 0.9982548
ALDT = 6
Downtime = 7.50
Sw.Time (min) = 5.00
AG= 0.9999566685
1 of 1
161 GB
MTBF = 150,000
MTTR = 0.50
Ai = 0.9999567
ALDT = 6
Downtime = 6.50
Sw.Time (min) = N/A
AG= 0.9999999684
1 of 2
SUN Utra 140, 64MB RAM, 6GB
MTBF = 8,324
MTTR = 0.50
Ai = 0.9992197
ALDT = 6
Downtime = 6.50
Sw.Time (min) = 5.00
AG= 0.9994014024
1 of 1
EMASS AML
MTBF = 11,687
MTTR = 1.00
Ai = 0.9994014
ALDT = 6
Downtime = 7.00
Sw.Time (min) = N/A
A G= 0.9983228512
4 of 4
EMASS 3590 NTP
MTBF = 16,667
MTTR = 1.00
A i = 0.9995802
ALDT = 6
Downtime = 7.00
Sw.Time (min) = N/A
AG= 0.9999999037
1 of 2
SGI Challenge XL, 2 CPU, 256 MB RAM, 6 GB
MTBF = 5,109
MTTR = 1.50
Ai = 0.9985342
ALDT = 6
Downtime = 7.50
Sw.Time (min) = 5.00
AG= 0.9999999929
1 of 2
HP J210, 4 CPU, 256 MB, 4 GB
MTBF = 20,000
MTTR = 2.50
Ai = 0.9995752
ALDT = 6
Downtime = 8.50
Sw.Time (min) = 5.00
AG= 0.9999566685
1 of 1
HP 28 GB RAID
MTBF = 150,000
MTTR = 0.50
Ai = 0.9999567
ALDT = 6
Downtime = 6.50
Sw.Time (min) = N/A
A G= 0.9999999914
1 of 2
SUN Sparcstation 20/50, 128 MB, 4GB
MTBF = 15,947
MTTR = 0.50
A i = 0.9995926
ALDT = 6
Downtime = 6.50
Sw.Time (min) = 5.00
AG= 0.9999999998
1 of 2
FDDI Concentrator - Bay Networks 2914-04
MTBF = 100,000
MTTR = 0.50
Ai = 0.9999350
ALDT = 6
Downtime = 6.50
Sw.Time (min) = 5.00
AG= 0.9999999995
2 of 3
FDDI Concentrator - Bay Networks 2914-04
MTBF = 100,000
MTTR = 0.50
Ai = 0.9999350
ALDT = 6
Downtime = 6.50
Sw.Time (min) = 5.00
AG= 0.9999554814
1 of 1
PowerHub7000 - ALANTEC (4 FDDI cards & 3 pwr supply)
MTBF = 146,000
MTTR = 0.50
Ai = 0.9999555
ALDT = 6
Downtime = 6.50
Sw.Time (min) = N/A
A G= 0.9999566685
1 of 1
17 GB RAID
MTBF = 150,000
MTTR = 0.50
A i = 0.9999567
ALDT = 6
Downtime = 6.50
Sw.Time (min) = N/A

EOSD 3980 Ao/MDT Analytical Results for ASF

EOSD3980: Function Of Local Data Order Submission (Ao>=.96, MDT<=4.0 hrs)

Subsystem Description	Equipment Description	Model/Part Number	MTBF (hour)	MTTR (hour)	Admin. Logistic Delay Time (hour)	Switch over Time (min)	Total Downtime (hour)	Number of Units Required (m)	Total Number Of Units (n)	Redundancy	Unit Availability (Ai)	P	Redundant Group Availability (m out of n)
Data Manag.	DATA SPECIALIST W/S	SUN Utra 140, 64MB RAM, 6GB	8,324	0.5	6	5.00	6.50	1	2	standby off-line	0.9992197347	1.0	0.999999968
ACM	APC SERVER	SGI Challenge XL, 6 CPU, 512 MB RAM, 6 GB	4,290	1.5	6	5.00	7.50	1	2	standby off-line	0.9982547993	1.0	0.999999864
ACM	RAID DISK	108 GB	150,000	0.5	6	N/A	6.50	1	1	N/A	0.9999566685	N/A	0.999956669
ACM	OPS WORKSTATION	SUN Utra 140, 64MB RAM, 6GB	8,324	0.5	6	5.00	6.50	1	2	standby off-line	0.9992197347	1.0	0.999999968
MSS/CSS	MSS/CSS SERVER	HP J210, 4 CPU, 256 MB, 4 GB	20000	2.5	6	5.00	8.50	1	2	standby off-line	0.9995751805	1.0	0.999999993
MSS	RAID	HP 28 GB RAID	150,000	0.5	6	N/A	6.50	1	1	N/A	0.9999566685	N/A	0.999956669
MSS	MSS WS	SUN Sparcstation 20/50, 128 MB, 4GB	15,947	0.5	6	5.00	6.50	1	2	standby off-line	0.9995925659	1.0	0.999999991
ISS	FDDI CONCENTRATOR	FDDI Concentrator - Bay Networks 2914-04	100,000	0.5	6	5.00	6.50	1	2	standby off-line	0.9999350042	1.0	1.000000000
ISS	FDDI CONCENTRATOR	FDDI Concentrator - Bay Networks 2914-04	100,000	0.5	6	5.00	6.50	2	3	standby off-line	0.9999350042	1.0	1.000000000
ISS	FDDI SWITCH	PowerHub7000 - ALANTEC (4 FDDI cards & 3 pwr supply)	146,000	0.5	6	N/A	6.50	1	1	N/A	0.9999554814	N/A	0.999955481
													0.9998686399
		EOSD3980 Ao =	0.99987										
		EOSD3980 MDT =	0.33921										

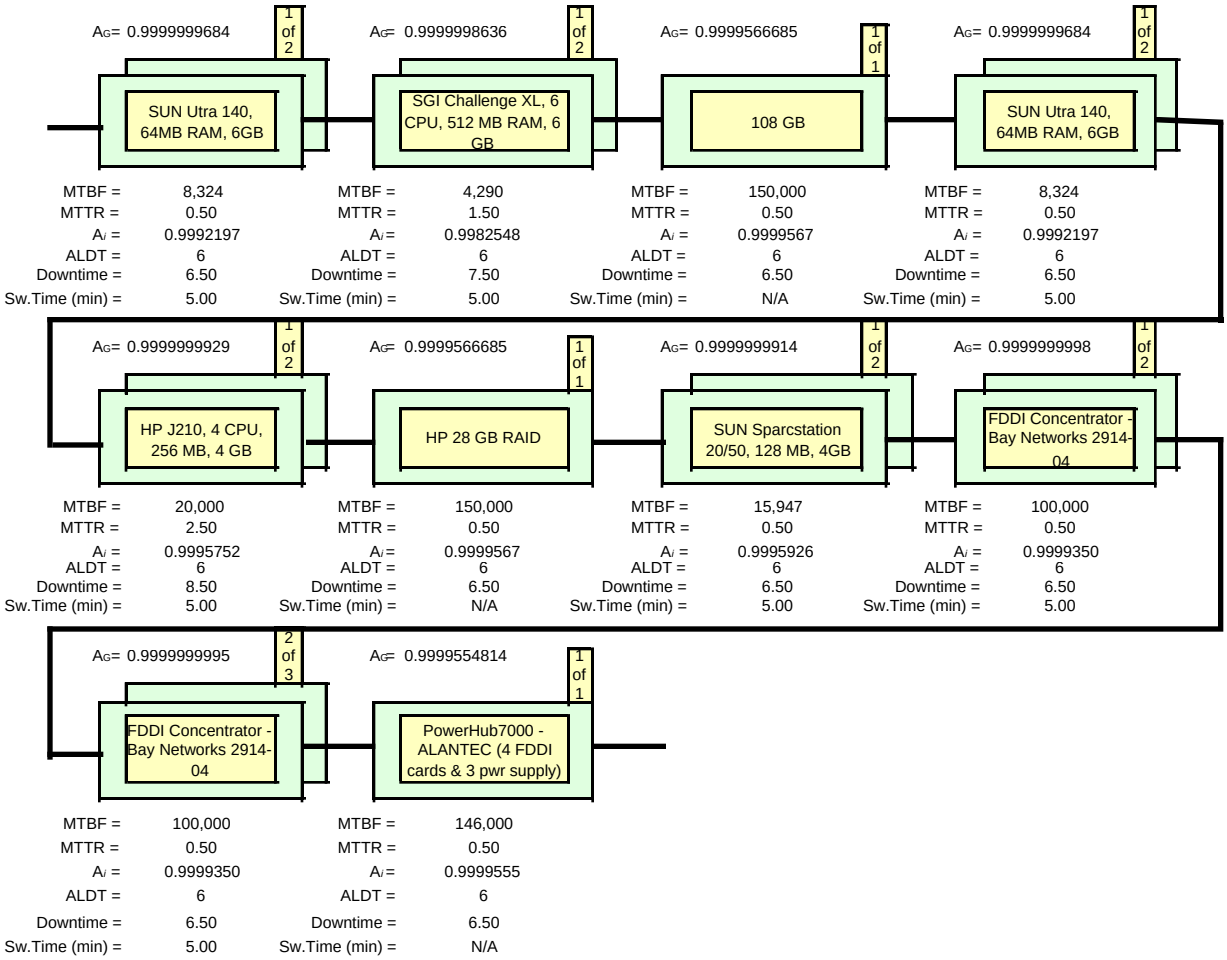
AG= 0.9999999684
1 of 2
SUN Utra 140, 64MB RAM, 6GB
MTBF = 8,324
MTTR = 0.50
Ai = 0.9992197
ALDT = 6
Downtime = 6.50
Sw.Time (min) = 5.00
AG= 0.9999998636
1 of 2
SGI Challenge XL, 6 CPU, 512 MB RAM, 6 GB
MTBF = 4,290
MTTR = 1.50
Ai = 0.9982548
ALDT = 6
Downtime = 7.50
Sw.Time (min) = 5.00
AG= 0.9999566685
1 of 1
108 GB
MTBF = 150,000
MTTR = 0.50
Ai = 0.9999567
ALDT = 6
Downtime = 6.50
Sw.Time (min) = N/A
AG= 0.9999999684
1 of 2
SUN Utra 140, 64MB RAM, 6GB
MTBF = 8,324
MTTR = 0.50
Ai = 0.9992197
ALDT = 6
Downtime = 6.50
Sw.Time (min) = 5.00
AG= 0.9999999929
1 of 2
HP J210, 4 CPU, 256 MB, 4 GB
MTBF = 20,000
MTTR = 2.50
Ai = 0.9995752
ALDT = 6
Downtime = 8.50
Sw.Time (min) = 5.00
AG= 0.9999566685
1 of 1
HP 28 GB RAID
MTBF = 150,000
MTTR = 0.50
Ai = 0.9999567
ALDT = 6
Downtime = 6.50
Sw.Time (min) = N/A
AG= 0.9999999914
1 of 2
SUN Sparcstation 20/50, 128 MB, 4GB
MTBF = 15,947
MTTR = 0.50
Ai = 0.9995926
ALDT = 6
Downtime = 6.50
Sw.Time (min) = 5.00
AG= 0.9999999998
1 of 2
FDDI Concentrator - Bay Networks 2914-04
MTBF = 100,000
MTTR = 0.50
Ai = 0.9999350
ALDT = 6
Downtime = 6.50
Sw.Time (min) = 5.00
AG= 0.9999999995
2 of 3
FDDI Concentrator - Bay Networks 2914-04
MTBF = 100,000
MTTR = 0.50
Ai = 0.9999350
ALDT = 6
Downtime = 6.50
Sw.Time (min) = 5.00
AG= 0.9999554814
1 of 1
PowerHub7000 - ALANTEC (4 FDDI cards & 3 pwr supply)
MTBF = 146,000
MTTR = 0.50
Ai = 0.9999555
ALDT = 6
Downtime = 6.50
Sw.Time (min) = N/A

EOSD 3990 Ao/MDT Analytical Results for ASF

EOSD3990: Function Of Data Order Submission Across DAACs (Ao<=.96, MDT>=4.0 hrs)

Subsystem Description	Equipment Description	Model/Part Number	MTBF (hour)	MTTR (hour)	Admin. Logistic Delay Time (hour)	Switchover Time (min)	Total Downtime (hour)	Number of Units Required (m)	Total Number Of Units (n)	Redundancy	Unit Availability (Ai)	P	Redundant Group Availability (m out of n)
Data Manag.	DMG SERVER	K400, 2 CPU, 512 MB RAM, 8 GB, 8 mm	22,747	2.7	6	N/A	8.70	1	1	N/A	0.9996176782	N/A	0.999617678
Data Manag.	RAID DISK	HP 10 GB	150,000	0.5	6	N/A	6.50	1	1	N/A	0.9999566685	N/A	0.999956669
Data Manag.	DATA SPECIALIST W/S	SUN Utra 140, 64MB RAM, 6GB	8,324	0.5	6	5.00	6.50	1	2	standby off-line	0.9992197347	1.0	0.999999968
ACM	APC SERVER	SGI Challenge XL, 6 CPU, 512 MB RAM, 6 GB	4,290	1.5	6	5.00	7.50	1	2	standby off-line	0.9982547993	1.0	0.999999864
ACM	RAID DISK	108 GB	150,000	0.5	6	N/A	6.50	1	1	N/A	0.9999566685	N/A	0.999956669
ACM	OPS WORKSTATION	SUN Utra 140, 64MB RAM, 6GB	8,324	0.5	6	5.00	6.50	1	2	standby off-line	0.9992197347	1.0	0.999999968
MSS/CSS	MSS/CSS SERVER	HP J210, 4 CPU, 256 MB, 4 GB	20000	2.5	6	5.00	8.50	1	2	standby off-line	0.9995751805	1.0	0.999999993
MSS	RAID	HP 28 GB RAID	150,000	0.5	6	N/A	6.50	1	1	N/A	0.9999566685	N/A	0.999956669
MSS	MSS WS	SUN Sparcstation 20/50, 128 MB, 4GB	15,947	0.5	6	5.00	6.50	1	2	standby off-line	0.9995925659	1.0	0.999999991
ISS	FDDI CONCENTRATOR	FDDI Concentrator - Bay Networks 2914-04	100,000	0.5	6	5.00	6.50	1	2	standby off-line	0.9999350042	1.0	1.000000000
ISS	FDDI CONCENTRATOR	FDDI Concentrator - Bay Networks 2914-04	100,000	0.5	6	5.00	6.50	2	3	standby off-line	0.9999350042	1.0	1.000000000
ISS	FDDI SWITCH	PowerHub7000 - ALANTEC (4 FDDI cards & 3 pwr supply)	146,000	0.5	6	N/A	6.50	1	1	N/A	0.9999554814	N/A	0.999955481
													0.9998686399
		EOSD3990 Ao =	0.99987										
		EOSD3990 MDT =	0.33921										

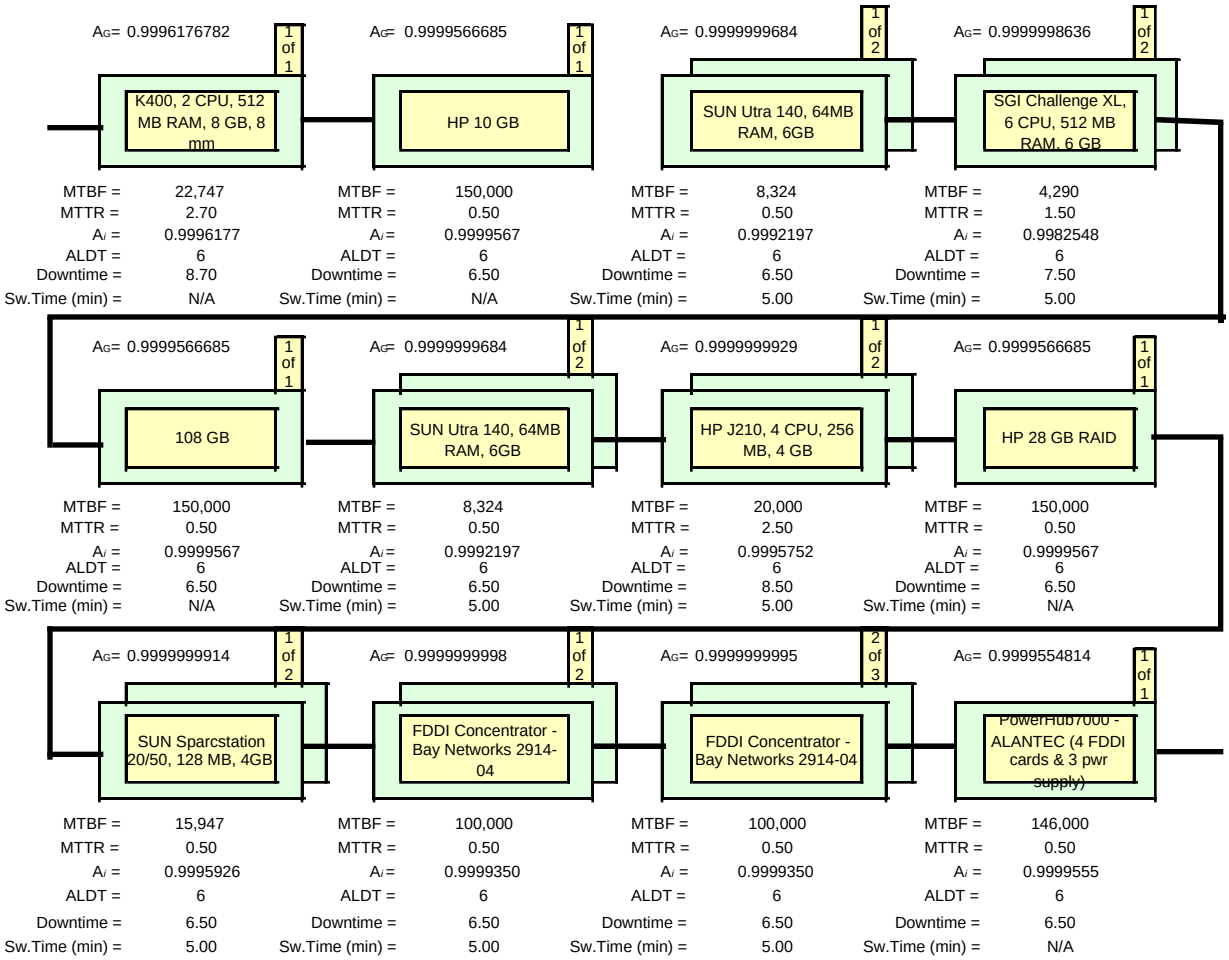
AG= 0.9996176782
1 of 1
K400, 2 CPU, 512 MB RAM, 8 GB, 8 mm
MTBF = 22,747
MTTR = 2.70
Ai = 0.9996177
ALDT = 6
Downtime = 8.70
Sw.Time (min) = N/A
AG= 0.9999566685
1 of 1
HP 10 GB
MTBF = 150,000
MTTR = 0.50
Ai = 0.9999567
ALDT = 6
Downtime = 6.50
Sw.Time (min) = N/A
AG= 0.9999999684
1 of 2
SUN Utra 140, 64MB RAM, 6GB
MTBF = 8,324
MTTR = 0.50
Ai = 0.9992197
ALDT = 6
Downtime = 6.50
Sw.Time (min) = 5.00
AG= 0.9999998636
1 of 2
SGI Challenge XL, 6 CPU, 512 MB RAM, 6 GB
MTBF = 4,290
MTTR = 1.50
Ai = 0.9982548
ALDT = 6
Downtime = 7.50
Sw.Time (min) = 5.00
AG= 0.9999566685
1 of 1
108 GB
MTBF = 150,000
MTTR = 0.50
Ai = 0.9999567
ALDT = 6
Downtime = 6.50
Sw.Time (min) = N/A
AG= 0.9999999684
1 of 2
SUN Utra 140, 64MB RAM, 6GB
MTBF = 8,324
MTTR = 0.50
Ai = 0.9992197
ALDT = 6
Downtime = 6.50
Sw.Time (min) = 5.00
AG= 0.9999999929
1 of 2
HP J210, 4 CPU, 256 MB, 4 GB
MTBF = 20,000
MTTR = 2.50
Ai = 0.9995752
ALDT = 6
Downtime = 8.50
Sw.Time (min) = 5.00
AG= 0.9999566685
1 of 1
HP 28 GB RAID
MTBF = 150,000
MTTR = 0.50
Ai = 0.9999567
ALDT = 6
Downtime = 6.50
Sw.Time (min) = N/A
AG= 0.9999999914
1 of 2
SUN Sparcstation 20/50, 128 MB, 4GB
MTBF = 15,947
MTTR = 0.50
Ai = 0.9995926
ALDT = 6
Downtime = 6.50
Sw.Time (min) = 5.00
AG= 0.9999999998
1 of 2
FDDI Concentrator - Bay Networks 2914-04
MTBF = 100,000
MTTR = 0.50
Ai = 0.9999350
ALDT = 6
Downtime = 6.50
Sw.Time (min) = 5.00
AG= 0.9999999995
2 of 3
FDDI Concentrator - Bay Networks 2914-04
MTBF = 100,000
MTTR = 0.50
Ai = 0.9999350
ALDT = 6
Downtime = 6.50
Sw.Time (min) = 5.00
AG= 0.9999554814
1 of 1
PowerHub7000 - ALANTEC (4 FDDI cards & 3 pwr supply)
MTBF = 146,000
MTTR = 0.50
Ai = 0.9999555
ALDT = 6
Downtime = 6.50
Sw.Time (min) = N/A

EOSD 4000 Ao/MDT Analytical Results for ASF

EOSD4000: Function Of IMS Data Management and Maintenance Interface (Ao>=.96, MDT<=4.0 hrs)

Subsystem Description	Equipment Description	Model/Part Number	MTBF (hour)	MTTR (hour)	Admin. Logistic Delay Time (hour)	Switch over Time (min)	Total Downtime (hour)	Number of Units Required (m)	Total Number Of Units (n)	Redundancy	Unit Availability (Ai)	P	Redundant Group Availability (m out of n)
Data Manag.	DMG SERVER	K400, 2 CPU, 512 MB RAM, 8 GB, 8 mm	22,747	2.7	6	N/A	8.70	1	1	N/A	0.9996176782	N/A	0.999617678
Data Manag.	RAID DISK	HP 10 GB	150,000	0.5	6	N/A	6.50	1	1	N/A	0.9999566685	N/A	0.999956669
Data Manag.	DBA OPS WORKSTATION	HP C100, 64 MB RAM, 6 GB	35,700	2.5	6	N/A	8.50	1	1	N/A	0.9997619614	N/A	0.999761961
ACM	OPS WORKSTATION	SUN Utra 140, 64MB RAM, 6GB	8,324	0.5	6	5.00	6.50	1	2	standby off-line	0.9992197347	1.0	0.999999968
DRP	ARCHIVE ROBOT(1)	EMASS AML	11,687	1.0	6	N/A	7.00	1	1	N/A	0.9994014024	N/A	0.999401402
DRP	TAPE DRIVE (1)	EMASS 3590 NTP	16,667	1.0	6	N/A	7.00	4	4	N/A	0.9995801847	N/A	0.998322851
DRP	DBMS SERVER	SGI Challenge XL, 2 CPU, 256 MB RAM, 6 GB	5,109	1.5	6	5.00	7.50	1	2	standby off-line	0.9985341542	1.0	0.999999904
MSS/CSS	MSS/CSS SERVER	HP J210, 4 CPU, 256 MB, 4 GB	20000	2.5	6	5.00	8.50	1	2	standby off-line	0.9995751805	1.0	0.999999993
MSS	RAID	HP 28 GB RAID	150,000	0.5	6	N/A	6.50	1	1	N/A	0.9999566685	N/A	0.999956669
MSS	MSS WS	SUN Sparcstation 20/50, 128 MB, 4GB	15,947	0.5	6	5.00	6.50	1	2	standby off-line	0.9995925659	1.0	0.999999991
ISS	FDDI CONCENTRATOR	FDDI Concentrator - Bay Networks 2914-04	100,000	0.5	6	5.00	6.50	1	2	standby off-line	0.9999350042	1.0	1.000000000
ISS	FDDI CONCENTRATOR	FDDI Concentrator - Bay Networks 2914-04	100,000	0.5	6	5.00	6.50	2	3	standby off-line	0.9999350042	1.0	1.000000000
ISS	FDDI SWITCH	PowerHub7000 - ALANTEC (4 FDDI cards & 3 pwr supply)	146,000	0.5	6	N/A	6.50	1	1	N/A	0.9999554814	N/A	0.999955481
													0.9973567703
		EOSD3970 Ao =	0.99736										
		EOSD3970 MDT =	2.21943										

Note: (1) Archive Robot and Tape Drives are 60% Duty Cycle

EOSD 4000 Ao/MDT Analytical Results for ASF

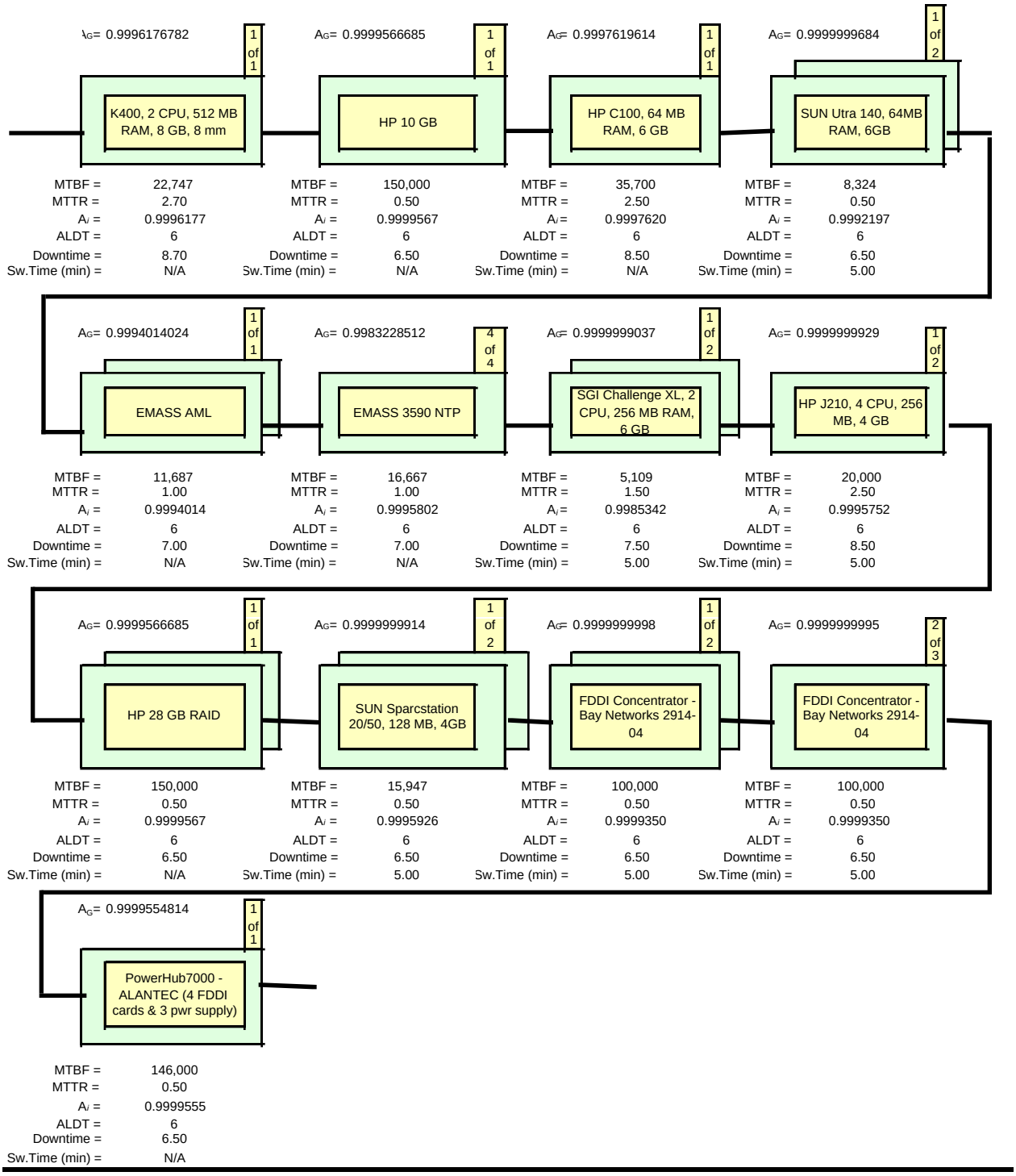

This page intentionally left blank.