Reliability/Maintainability/Availability (RMA) Modeling

Bang Nguyen

bnguyen@eos.hitc.com

24 April 1996

Presentation Outline

- RMA Activities Since Release B IDR
- RMA COTS H/W Data Flow and Documentation Updates
- RMA Modeling Process and Assumptions
- Sample Of Mapping RMA Requirements to ECS HWCIs
- Sample Of A Release B RMA Input Table and Block Diagram
- Release B CDR Availability/Mean Down Time Results

RMA Activities Since Release B IDR

- Updating Hardware COTS Vendor Data Based On Selected Models and Configurations
- Providing RMA Analyses To The Hardware Development Group To Ensure RMA Specifications Compliance
- Updating the RMA Database and Analyses
- Preparing RMA CDR Deliverables

RMA COTS H/W Data Flow and Documentation Updates

- **All RMA Deliverables Have Been Updated And Submitted Two (2) Weeks Prior To Release B CDR**

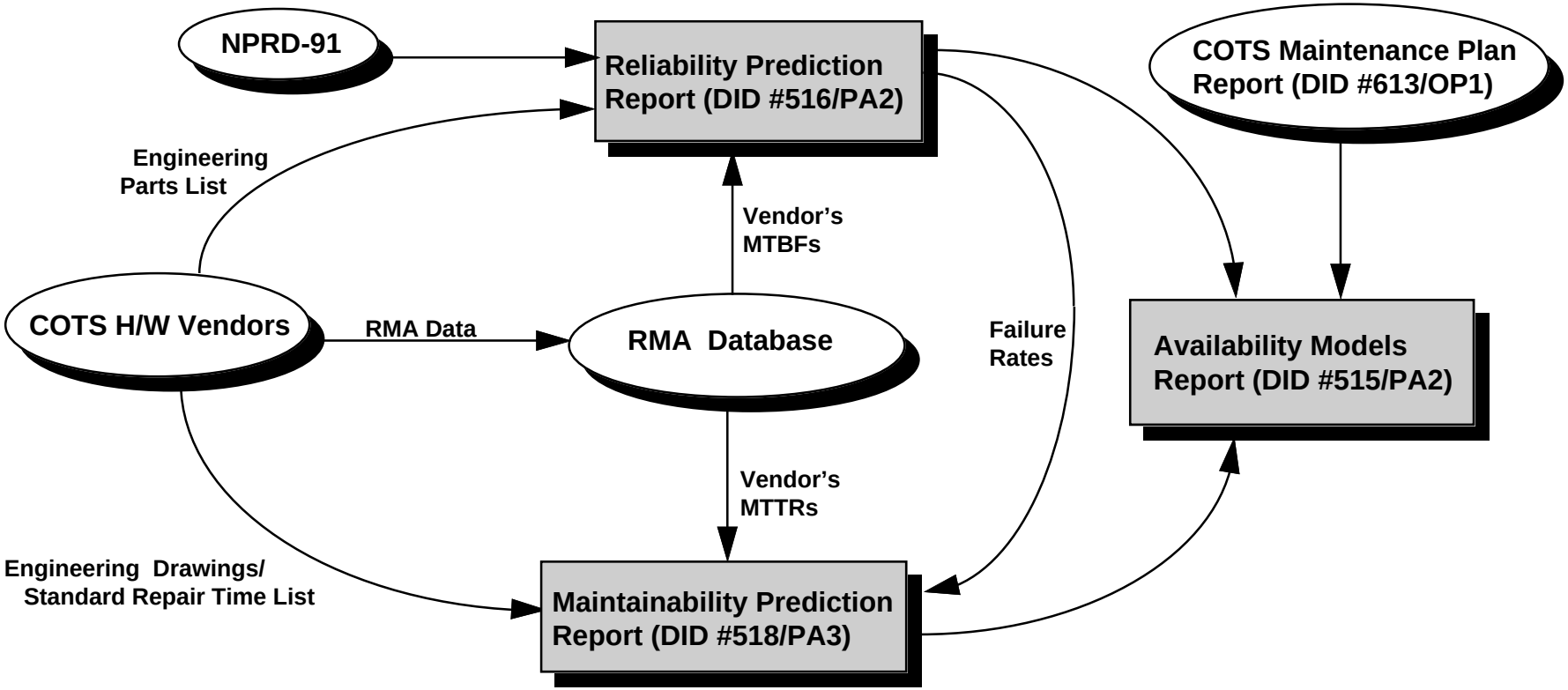

ECS Availability Modeling Process and Assumptions

- RMA Modeling Process Is In Accordance With the ECS Performance Assurance Implementation Plan (PAIP, DID 501-CD-001-001)
- Modeling Assumptions and Ground Rules Are The Same As Release A CDR and Release B IDR
- Thirteen (13) RMA Functional Requirements Have Been Analyzed For Seven (7) DAAC Sites

Sample Of Mapping RMA Requirements to ECS HWCIs

	Req't No.	EOSD3900	EOSD3920	EOSD3930	EOSD3940	EOSD3960	EOSD3970	EOSD3980	EOSD3990	EOSD4000
	Description	Function of Receiving Science Data:0.999,2 hrs	Function of Archiving and Distributing Data:0.98, 2 hrs	The user Interfaces to IMS Services at Individual DAAC sites: 0.993, 2 hrs	Function of Info. Searches on the ECS Directory: 0.993, 2 hrs	Function of Metadata Ingest and Update: 0.96, 4 hrs	Function of Info. Searches on Local Holdings: 0.96, 4 hrs	Function of Local Data Order Submission: 0.96,4 hrs	Function of Data Order Submission Across DAACs:0.96, 4 hrs . (Same as EOSD3980 plus Comm. Equipment)	Function of IMS DataBase Management and Maintenance Interface: 0.96, 4 hrs
	Assumptions:	(L0 data only)	(Data other than L0)	(Via V0 gateway)			(Data Server Level)			
HWCI Name/Subsystem	**Component Class**	**#Req'd/Tot**	**#R/Tot.**	**#R/Tot.**	**#R/Tot.**	**#R/Tot.**	**#R/Tot.**	**#R/Tot.**	**#R/Tot.**	**#R/Tot.**
DMGHW/Data Manag.	DMG Server			1/1	1/1				1/1	1/1
DMGHW/Data Manag.	Data Specialist W/S					1/3		1/3	1/3	
DMGHW/Data Manag.	OPS W/S									1/1
DMGHW/Data Manag.	RAID DISK (10GB)			1/1	1/1				1/1	1/
ICLHW / Ingest	ServerHost W/S&8mm tape	1/2				1/2				
ICLHW / Ingest	RAIDDisk (102GB)	1/1				1/1				
ICLHW / Ingest	Arch.Robot(1arm,1twr,2dri)	1/1				1/1				
ICLHW / Ingest	X-Terminal	1/2				1/2				
ACMHW/DataServ	APC Server Host		1/2	1/2	1/2	1/2	1/2	1/2	1/2	
ACMHW/Data Serv.	APC RAID (340 GB)		1/1	1/1	1/1	1/1	1/1	1/1	1/1	
ACMHW/Data Serv.	STK ATL w/8 drives		1/1	1/1	1/1	1/1	1/1	1/1	1/1	
ACMHW/Data Serv.	OPS W/S									1/2
DIPHW/Data Server	Dist. Server Host		2/3			2/3				
DIPHW/Data Server	Dist.RAID (240 GB)		1/1			1/1				
DIPHW / Data Server	4mmTape Stcker w/drives		1/1,ea w/3drvs							
DIPHW / Data Server	8mmTape Stcker w/drives		1/1,ea w/3drvs							
DIPHW/Data Server	3480/3490 Drive		1/1							
DIPHW/Data Server	6250Tape Drive		1/1							
DIPHW/Data Server	CD-ROMJukebox		1/1							

Sample Of Mapping RMA Requirements to ECS HWCIs (cont.)

	Req't No.	EOSD3900	EOSD3920	EOSD3930	EOSD3940	EOSD3960	EOSD3970	EOSD3980	EOSD3990	EOSD4000
	Description	Function of Receiving Science Data:0.999,2 hrs	Function of Archiving and Distributing Data:0.98, 2 hrs	The user Interfaces to IMS Services at Individual DAAC Sites: 0.993, 2 hrs	Function of Info. Searches on the ECS Directory: 0.993, 2 hrs	Function of Metadata Ingest and Update: 0.96, 4 hrs	Function of Info. Searches on Local Holdings: 0.96, 4 hrs	Function of Local Data Order Submission: 0.96,4 hrs	Function of Data Order Submission Across DAACs:0.96, 4 hrs	Function of IMS DataBase Management and Maintenance Interface: 0.96, 4 hrs
HWCI Name/Subsystem	**Component Class**	**#Req'd/Tot**	**#R/Tot.**	**#R/Tot.**	**#R/Tot.**	**#R/Tot.**	**#R/Tot.**	**#R/Tot.**	**#R/Tot.**	**#R/Tot.**
WKSHW/Data Serv.	WKS Host Server		1/2							
WKSHW/Data Serv.	RAIDDisk (340 GB)		1/1							
WKSHW/Data Serv.	STK ATL w/8 drives		1/1							
DRPHW/Data Serv.	FSMS Server		1/2							
DRPHW/Data Serv.	FSMS RAID (68GB)		1/1							
DRPHW/Data Serv.	DBMS Server		1/2	1/2		1/2	1/2			1/2
DRPHW/Data Serv.	DBMS RAID (10GB)		1/1	1/1		1/1	1/1			1/1
DRPHW/Data Serv.	ArchRobot.(2arms,10dri)		2/2							
DDSHW/Data Serv.	Document Server		1/2							
SPRHW/ Proces.	AI&TSci.Pr.-16CPU (1/1)									
AITHW/ Proces.	AIT W/S (2/3)									
AITHW/ Proces.	X-Term (6/7)									
AITHW/ Proces.	AITWS/DBMS Svr (1/1)									
AITHW/ Proces.	AIT Printer (1/2)									
PLNHW / Planning	DBMS Svr/12GB (1/2)									
AQAHW / Planning	AQA W/S (1/1)									
MSS/CSS	MSS/CSS Server	1/2	1/2	1/2	1/2	1/2	1/2	1/2	1/2	1/2
MSS/CSS	36GB RAID	1/1	1/1	1/1	1/1	1/1	1/1	1/1	1/1	1/1
MSS/CSS	MSS/CSS W/S	2/3	2/3	2/3	2/3	2/3	2/3	2/3	2/3	2/3
MSS/LSM	MSS/CSS Printer (1/1)									
MSS/CSS	BackUp Svr/Tape (1/1)									
Concentrator/ISS	FDDI Concentrator	1/2 +2/3	1/2 +2/3	1/2 +2/3	1/2 +2/3	1/2+1/2 +2/3	1/2 +2/3	1/2 +2/3	1/2 +2/3	1/2 +2/3
FDDI Switch/ISS	FDDI Switch	1	1	1	1	1	1	1	1	1

Sample Of Availability Input Table

EOSD3930: User Interfaces to IMS Services at Individual DAAC Site (Ao>=.993, MDT<=2.0 hrs)

Subsystem Description	Equipment Description	Model/Part Number	MTBF (hour)	MTTR (hour)	Admin. Logistic Delay Time (hour)	Switch over Time (min)	Total Downtime (hour)	Number of Units Required (m)	Total Number Of Units (n)	Redundancy	Unit Availability (Ai)	P	Redundant Group Availability (m out of n)
Data Manag.	DMG SERVER	K400, 2 CPU, 512 MB RAM, 8 GB, 8 mm	22,747	2.7	6	N/A	8.70	1	1	N/A	0.9996176782	N/A	0.999617678
Data Manag.	RAID DISK	HP 10 GB	150,000	0.5	6	N/A	6.50	1	1	N/A	0.9999566685	N/A	0.999956669
ACM	APC SERVER	SGI Challenge L, 4 CPU, 256 MB RAM, 4 GB	6,714	1.5	6	5.00	7.50	1	2	standby off-line	0.9988841776	1.0	0.999999944
ACM	RAID DISK	480 GB	150,000	0.5	6	N/A	6.50	1	1	N/A	0.9999566685	N/A	0.999956669
ACM	OPS WORKSTATION	Sun Sparc 20/50, 64 MB RAM, 4 GB	15,947	0.5	6	5.00	6.50	1	2	standby off-line	0.9995925659	1.0	0.999999991
DRP	DBMS SERVER	SGI Challenge XL, 2 CPU, 256 MB RAM, 6 GB	5,109	1.5	6	5.00	7.50	1	2	standby off-line	0.9985341542	1.0	0.999999904
DRP	RAID DISK	27 GB	150,000	0.5	6	N/A	6.50	1	1	N/A	0.9999566685	N/A	0.999956669
MSS/CSS	MSS/CSS SERVER	HP J210, 4 CPU, 256 MB, 4 GB	20,000	2.5	6	5.00	8.50	1	2	standby off-line	0.9995751805	1.0	0.999999993
MSS	RAID	HP 36 GB RAID	150,000	0.5	6	N/A	6.50	1	1	N/A	0.9999566685	N/A	0.999956669
MSS	MSS WS	SUN Sparcstation 20/50, 128 MB, 4GB	15,947	0.5	6	5.00	6.50	1	2	standby off-line	0.9995925659	1.0	0.999999991
ISS	FDDI CONCENTRATOR	FDDI Concentrator - Bay Networks 2914-04	100,000	0.5	6	5.00	6.50	1	2	standby off-line	0.9999350042	1.0	1.000000000
ISS	FDDI CONCENTRATOR	FDDI Concentrator - Bay Networks 2914-04	100,000	0.5	6	5.00	6.50	3	4	standby off-line	0.9999350042	1.0	0.999999999
ISS	FDDI SWITCH	PowerHub7000 - (4 FDDI cards & 3 pwr supply)	146,000	0.5	6	N/A	6.50	1	1	N/A	0.9999554814	N/A	0.999955481
		EOSD3930 Ao =	0.99940										
		EOSD3930 MDT =	1.04495										

Sample Of An RMA String
EOSD3930: User Interfaces to Information Management System (IMS) at Individual DAAC Site

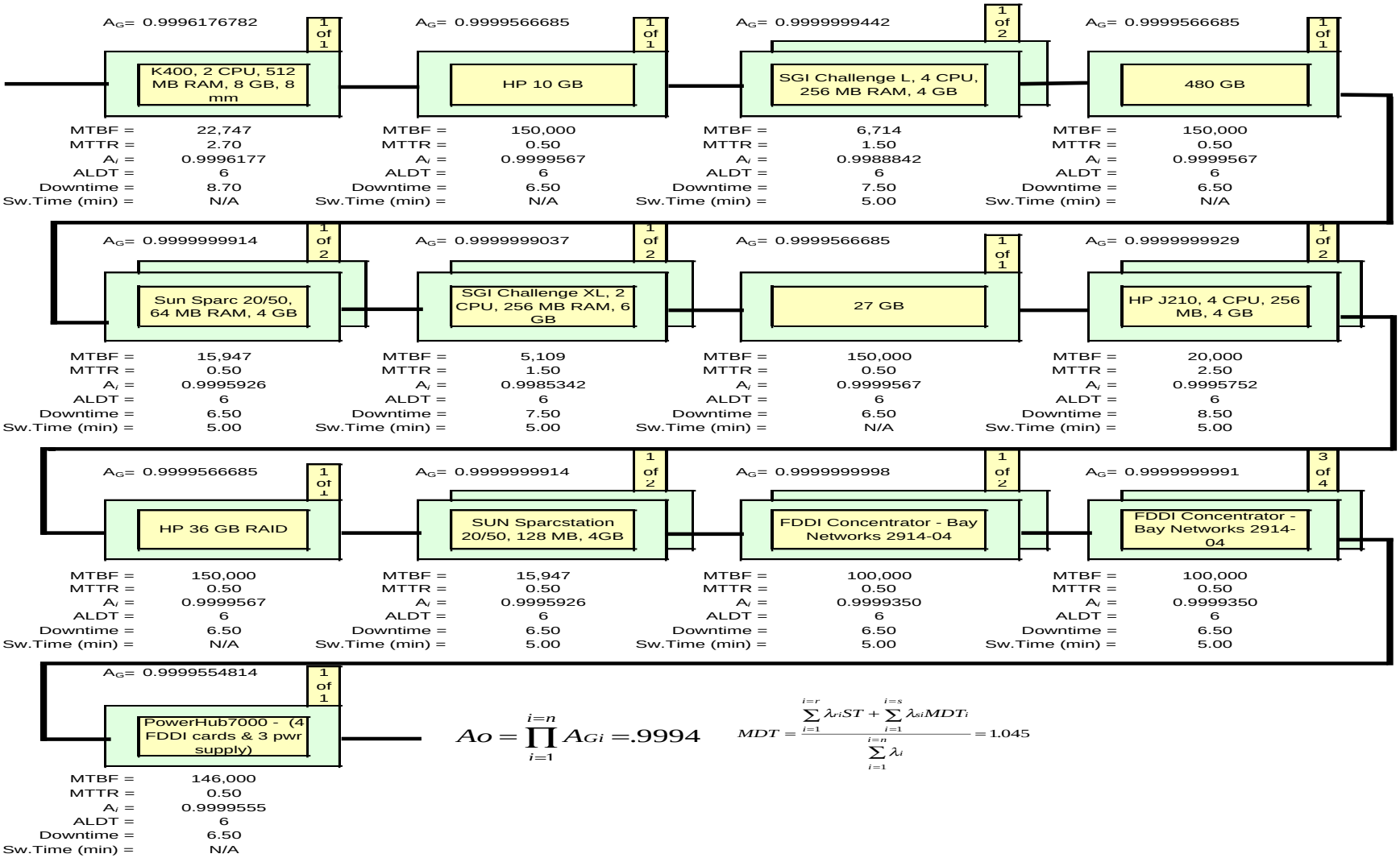

$$Ao = \prod_{i=1}^{i=n} A_{Gi} = .9994$$

$$MDT = \frac{\sum_{i=1}^{i=r} \lambda_{ri} ST + \sum_{i=1}^{i=s} \lambda_{si} MDT_i}{\sum_{i=1}^{i=n} \lambda_i} = 1.045$$

Release B CDR Ao and MDT Results Summary

- **ECS Release B CDR Design Continues To Meet All RMA Requirements**
- **Detailed Analyses Have Been Documented in DID 515-CD-002-002**

Req't Nos. (Ao/MDT)	LaRC		NSIDC		GSFC	
	Ao	MDT (hrs)	Ao	MDT (hrs)	Ao	MDT (hrs)
EOSD3700 (>0.96/<4.0 hrs)	0.9922974	0.78	0.9980234	1.52	0.9930703	2.24
EOSD3900 (>0.999/2.0 hrs)	0.9996638	0.93	N/A **	N/A **	0.9994280	1.51
EOSD3920 (>0.98/<2.0 hrs)	0.9979736	0.88	0.9984500	1.02	0.9942315	1.78
EOSD3930 (>0.993/<2.0 hrs)	0.9993998	1.04	0.9994443	1.04	0.9994443	1.00
EOSD3940 (>0.993/<2.0 hrs)	0.9994432	1.41	0.9994432	1.41	0.9994432	1.41
EOSD3950 (>0.993/<2.0 hrs)	0.9999721	0.67	0.9999721	0.67	0.9999721	0.67
EOSD3960 (>0.96/<4.0 hrs)	0.9994891	0.52	0.9997818	0.33	0.9994891	0.52
EOSD3970 (>0.96/<4.0 hrs)	0.9998253	0.39	0.9998253	0.40	0.9998253	0.39
EOSD3980 (>0.96/<4.0 hrs)	0.9998687	0.39	0.9998687	0.39	0.9998687	0.39
EOSD3990 (>0.96/<4.0 hrs)	0.9994432	1.24	0.9994432	1.24	0.9994432	1.24
EOSD4000 (>0.96/<4.0 hrs)	0.9994431	0.32	0.9994431	1.19	0.9994431	1.13
EOSD4010 (Ao > 0.95)	0.9978210	N/A	0.9978210	N/A	0.9978210	N/A
EOSD4030 (>0.998/<20 Min)	N/A*	N/A*	N/A*	N/A*	0.9999121	0.08

* SMC Function Is Only Applied At GSFC
** No L0 Ingest at NSIDC

Release B CDR Ao and MDT Results Summary (cont.)

- **ECS Release B CDR Design Continues To Meet All RMA Requirements**
- **Detailed Analyses Have Been Documented in DID 515-CD-002-002**

Req't Nos. (Ao/MDT)	JPL		ORNL		EDC		ASF	
	Ao	MDT (hrs)	Ao	MDT (hrs)	Ao	MDT (hrs)	Ao	MDT (hrs)
EOSD3700 (>0.96/<4.0 hrs)	0.9964327	2.43	N/A*	N/A*	0.9911990	1.21	N/A*	N/A*
EOSD3900 (>0.999/2.0 hrs)	0.9996638	0.93	N/A*	N/A*	0.9999133	0.32	N/A*	N/A*
EOSD3920 (>0.98/<2.0 hrs)	0.9977346	1.42	0.9997384	0.32	0.9958588	1.36	0.9971192	1.26
EOSD3930 (>0.993/<2.0 hrs)	0.9994442	0.92	0.9992063	1.20	0.9992063	1.15	0.9985637	1.74
EOSD3940 (>0.993/<2.0 hrs)	0.9994431	1.25	0.9992052	1.58	0.9992052	1.35	0.9992052	1.43
EOSD3950 (>0.993/<2.0 hrs)	0.9999721	0.67	0.9999721	0.67	0.9999721	0.67	0.9999721	0.67
EOSD3960 (>0.96/<4.0 hrs)	0.9994892	0.53	0.9998697	0.25	0.9997386	0.32	0.9975076	1.19
EOSD3970 (>0.96/<4.0 hrs)	0.9998253	0.36	0.9998252	0.35	0.9998253	0.36	0.9975509	1.46
EOSD3980 (>0.96/<4.0 hrs)	0.9998687	0.32	0.9998686	0.31	0.9998687	0.32	0.9998686	0.29
EOSD3990 (>0.96/<4.0 hrs)	0.9994431	1.01	0.9994431	1.01	0.9994431	1.01	0.9994430	0.90
EOSD4000 (>0.96/<4.0 hrs)	0.9994431	1.09	0.9994864	0.89	0.9994431	0.95	0.9969755	2.63
EOSD4010 (Ao > 0.95)	0.9978210	N/A	N/A*	N/A	0.9978210	N/A	N/A*	N/A

* There are no data products processing and L0 ingest at ORNL and ASF